STANDARDS NEW ZEALAND
PAEREWA AOTEAROA

NZS 3604:1999
Incorporating Amendments 1 and 2

New Zealand Standard

Timber Framed Buildings

Superseding NZS 3604:1990 and NZMP 3600:Part 1:1992

NZS 3604:1999

Photo: Terry Hann

© The Crown in right of New Zealand, administered by the New Zealand Standards Executive. Access to this standard has been sponsored by the Ministry of Business, Innovation, and Employment under copyright license LN001498. You are not permitted to reproduce or distribute any part of this standard without prior written permission from Standards New Zealand, on behalf of New Zealand Standards Executive, unless your actions are covered by Part 3 of the Copyright Act 1994.

Single User PDF Terms & Conditions

You have material which is subject to strict conditions of use. Copyright in this material is owned by the New Zealand Standards Executive. Please read these terms and conditions carefully, as in addition to the usual range of civil remedies available to Standards New Zealand on behalf of the New Zealand Standards Executive for infringement of copyright, under New Zealand law every person who infringes copyright may be liable to a fine of up to $10,000 for every infringing copy or imprisonment of up to 5 years, or a fine of up to $150,000 or imprisonment not exceeding 5 years.

You have access to a single-user licence to read this non-revisable Adobe Acrobat PDF file and print out and retain ONE printed copy only.

We retain title and ownership of the copyright in this PDF file and the corresponding permitted printed copy at all times.

Under this license use of both the PDF file and the single permitted printed copy of this PDF file you may make are restricted to you. Under no circumstances are you permitted to save, sell, transfer, or copy this PDF file, the one permitted printed copy of this PDF file, or any part of either of them.

You undertake that you will not modify, adapt, translate, reverse engineer, decompile, disassemble or create derivative works based on any of the downloaded PDF file, nor will you merge it with any other software or document, even for internal use within your organization.

Under no circumstances may this PDF file be placed on a network of any sort without our express permission.

You are solely responsible for the selection of this PDF file and any advice or recommendation given by us about any aspect of this PDF file is intended for guidance only and is followed or acted upon entirely at your own risk.

We are not aware of any inherent risk of viruses in this PDF file at the time that it is accessed. We have exercised due diligence to ensure, so far as practicable, that this file does not contain such viruses.

No warranty of any form is given by us or by any party associated with us with regard to this PDF file, and you accept and acknowledge that we will not be liable in any way to you or any to other person in respect of any loss or damage however caused which may be suffered or incurred or which may arise directly or indirectly through any use of this PDF file.

Regardless of where you were when you received this PDF file you accept and acknowledge that to the fullest extent possible you submit to New Zealand law with regard to this licence and to your use of this PDF file.

Copyright Standards New Zealand

© The Crown in right of New Zealand, administered by the New Zealand Standards Executive. Access to this standard has been sponsored by the Ministry of Business, Innovation, and Employment under copyright license LN001498. You are not permitted to reproduce or distribute any part of this standard without prior written permission from Standards New Zealand, on behalf of New Zealand Standards Executive, unless your actions are covered by Part 3 of the Copyright Act 1994.

Copyright Standards New Zealand

COMMITTEE REPRESENTATION

This Standard was prepared by the Timber Framing Committee (P 3604) for the Standards Council established under the Standards Act 1988.

The Timber Framing Committee consisted of representatives of the following:

Building Industry Authority
Building Officials Institute of New Zealand
Building Research Association New Zealand
Cement and Concrete Association of New Zealand
Design Association New Zealand
Institution of Professional Engineers New Zealand
Local Government New Zealand
New Zealand Forest Research Institute
New Zealand Institute of Architects
New Zealand Institute of Building
New Zealand Metal Roofing Manufacturers Inc.
New Zealand Timber Industry Federation
Registered Master Builders Federation

Co-opted
Mr Ernest Lapish

© COPYRIGHT

The copyright of this document is the property of the Standards Council. No part of it may be reproduced by photocopying or by any other means without the prior written permission of the Chief Executive of Standards New Zealand unless the circumstances are covered by Part III of the Copyright Act 1994.

Standards New Zealand will vigorously defend the copyright in this Standard. Every person who breaches Standards New Zealand's copyright may be liable to a fine not exceeding $50,000 or to imprisonment for a term not to exceed three months. If there has been a flagrant breach of copyright, Standards New Zealand may also seek additional damages from the infringing party, in addition to obtaining injunctive relief and an account of profits.

Published by Standards New Zealand, the trading arm of the Standards Council, Private Bag 2439, Wellington 6140.
Telephone: (04) 498 5990, Fax: (04) 498 5994.
E-mail: snz@standards.co.nz
Website: www.standards.co.nz

AMENDMENTS

No	*Date of issue*	*Description*	*Entered by, and date*
1	December 2000	Incorporates technical and editorial changes and items by way of clarification.	Incorporated in this reprint
2	May 2006	Updates the document to account for the new timber grades and engineering properties defined in Amendment No. 4 to NZS 3603	Incorporated in this reprint

© The Crown in right of New Zealand, administered by the New Zealand Standards Executive. Access to this standard has been sponsored by the Ministry of Business, Innovation, and Employment under copyright license LN001498. You are not permitted to reproduce or distribute any part of this standard without prior written permission from Standards New Zealand, on behalf of New Zealand Standards Executive, unless your actions are covered by Part 3 of the Copyright Act 1994.

© The Crown in right of New Zealand, administered by the New Zealand Standards Executive. Access to this standard has been sponsored by the Ministry of Business, Innovation, and Employment under copyright license LN001498. You are not permitted to reproduce or distribute any part of this standard without prior written permission from Standards New Zealand, on behalf of New Zealand Standards Executive, unless your actions are covered by Part 3 of the Copyright Act 1994.

NZS 3604:1999

TIMBER FRAMED BUILDINGS

Superseding NZS 3604:1990 and NZMP 3600:Part 1:1992
Incorporating Amendments No. 1 and No. 2

Copyright Standards New Zealand

© The Crown in right of New Zealand, administered by the New Zealand Standards Executive. Access to this standard has been sponsored by the Ministry of Business, Innovation, and Employment under copyright license LN001498. You are not permitted to reproduce or distribute any part of this standard without prior written permission from Standards New Zealand, on behalf of New Zealand Standards Executive, unless your actions are covered by Part 3 of the Copyright Act 1994.

NOTICE OF DISCLAIMER

No responsibility or liability whatsoever is accepted by Standards New Zealand for anything stated by parties other than Standards New Zealand in this publication.

Standards New Zealand does not warrant or guarantee the accuracy or truth of any advertisements or any written information published on behalf of any parties other than Standards New Zealand itself in this publication.

Parties seeking to rely on or deal with parties supplying such advertisements or other information must rely entirely upon their own enquiries, assessments and judgements and Standards New Zealand accepts no responsibility in respect of the same.

All complaints, claims or requests for information in relation to advertisements or information supplied by parties other than Standards New Zealand, should be directed to the party concerned.

Copyright Preview

© The Crown in right of New Zealand, administered by the New Zealand Standards Executive. Access to this standard has been sponsored by the Ministry of Business, Innovation, and Employment under copyright license LN001498. You are not permitted to reproduce or distribute any part of this standard without prior written permission from Standards New Zealand, on behalf of New Zealand Standards Executive, unless your actions are covered by Part 3 of the Copyright Act 1994.

CONTENTS

PAGE

Committee representation .....IFC
Copyright .....IFC
Notice of disclaimer..... 2
Related documents 4
Foreword 9

1 SCOPE AND INTERPRETATION **1**-1

2 GENERAL..... **2**-1

3 SITE REQUIREMENTS **3**-1

4 DURABILITY **4**-1

5 BRACING DESIGN..... **5**-1

6 FOUNDATION AND SUBFLOOR FRAMING..... **6**-1

7 FLOORS **7**-1

8 WALLS **8**-1

9 POSTS **9**-1

10 ROOF FRAMING..... **10**-1

11 THE BUILDING ENVELOPE – WALL AND ROOF CLADDINGS **11**-1

12 INTERIOR LININGS **12**-1

13 CEILINGS **13**-1

ADDITIONAL INFORMATION (NORMATIVE)

14 REQUIREMENTS FOR 3 KPa FLOOR LOADINGS **14**-1

15 0.5 kPa or 1 kPa SNOW LOADING ..... **15**-1 Amd 1 Dec '00

16 COMPOSITE CONSTRUCTION LINTEL TABLES **16**-1

ADDITIONAL INFORMATION (INFORMATIVE)

17 EXPANSIVE SOILS **17**-1

18 BUILDING PRODUCT APPRAISALS AND BIA ACCREDITATIONS **18**-1

19 STATUTORY INFORMATION **19**-1

20 INDUSTRY INFORMATION **20**-1

INDEX

Copyright Standards New Zealand

© The Crown in right of New Zealand, administered by the New Zealand Standards Executive. Access to this standard has been sponsored by the Ministry of Business, Innovation, and Employment under copyright license LN001498. You are not permitted to reproduce or distribute any part of this standard without prior written permission from Standards New Zealand, on behalf of New Zealand Standards Executive, unless such actions are covered by Part 3 of the Copyright Act 1994.

RELATED DOCUMENTS

Reference is made in this document to the following:

NEW ZEALAND STANDARDS

NZS/BS 1449:- - - -	Steel plate, sheet and strip	
NZS 2295:1988	Building papers (breather type)	Amd 1 Dec '00
NZS 3101:1995	Concrete structures standard	
NZS 3109:1997	Concrete construction	Amd 1 Dec '00
NZS 3124:1997	Concrete construction for minor works	
NZS 3403:1978	Specification for hot-dip galvanized corrugated steel sheet for building purposes	
NZS 3601:1973	Metric dimensions for timber	
NZS 3602:2003	Timber and wood-based products for use in building	Amd 2 May '06
NZS 3603:1993	Timber structures standard	
NZS 3605:1992	Specification for timber piles and poles for use in building	
NZS 3611:1970	Specification for exterior plywood	
NZS 3617:1979	Specification for profiles of weatherboards, fascia boards, and flooring	
NZS 3622:2004	Verification of timber properties	
NZS 3631:1988	New Zealand timber grading rules	
NZS 3640:2003	Chemical preservation of round and sawn timber	Amd 2 May '06
NZS 4203:1992	General structural design and design loadings for buildings	
NZS 4206:1992	Concrete interlocking roofing tiles	
NZS 4210:1989	Code of practice for masonry construction: materials and workmanship	
NZS 4211:1985	Specification for performance of windows	

Copyright Standards New Zealand

© The Crown in right of New Zealand, administered by the New Zealand Standards Executive. Access to this standard has been sponsored by the Ministry of Business, Innovation, and Employment under copyright license LN001498. You are not permitted to reproduce or distribute any part of this standard without prior written permission from Standards New Zealand, on behalf of New Zealand Standards Executive, unless your actions are covered by Part 3 of the Copyright Act 1994.

NZS 4217:- - - -	Pressed metal tile roofs	
Part 1:1980	Specification for roofing tiles and their accessories	
Part 2:1980	Code of practice for preparation of the structure and the laying and fixing of metal roofing tiles	
NZS 4229:1999	Concrete masonry buildings not requiring specific engineering design	Amd 1 Dec '00
NZS 4230:1990	Code of practice for the design of masonry structures	
NZS 4251:- - - -	Solid plastering	
Part 1:1998	Cement plasters for walls, ceilings and soffits	
NZS 4402:- - - -	Methods of testing soils for civil engineering purposes	
Part 2, Section 2:1986 Test 2.2	Determination of the liquid limit	
Part 2, Section 6:1986 Test 2.6	Determination of the linear shrinkage	
Part 6, Section 5.2:1988 Test 6.5.2	Determination of the penetration resistance of a soil: Hand method using a dynamic cone penetrometer	
NZS 4408:1988	Specification for asphalt roofing shingles made from glass felt and surfaced with mineral granules	
NZS 4431:1989	Code of practice for earth fill for residential development	
NZS 7401:1985	Specification for solid fuel burning domestic appliances	Amd 1 Dec '00
NZS 7421:1990	Specification for installation of solid fuel burning domestic appliances	
NZS 7703:1985	The painting of buildings	
		Amd 1 Dec '00

Copyright Standards New Zealand

© The Crown in right of New Zealand, administered by the New Zealand Standards Executive. Access to this standard has been sponsored by the Ministry of Business, Innovation, and Employment under copyright license LN001498. You are not permitted to reproduce or distribute any part of this standard without prior written permission from Standards New Zealand, on behalf of New Zealand Standards Executive, unless your actions are covered by Part 3 of the Copyright Act 1994.

JOINT AUSTRALIAN/NEW ZEALAND STANDARDS

AS/NZS 1100:- - - -	Technical drawing
AS/NZS 1111:1996	ISO metric hexagon commercial bolts and screws
AS/NZS 1328:- - - -	Glued laminated structural timber
Part 1:1998	Performance requirements and minimum production requirements
Part 2:1998	Guidelines for AS/NZS 1328:Part 1 for the selection, production and installation of glued laminated structural timber
AS/NZS 1393:1996	Coach screws – Metric series with ISO hexagon heads
AS/NZS 1859:- - - -	Reconstituted wood-based panels
Amd 1 Dec '00 Part 1:1997	Particleboard
Part 2:1997	Medium density fibreboard (MDF)
AS/NZS 2269:1994	Plywood – Structural
AS/NZS 2312:1994	Guide to the protection of iron and steel against exterior atmospheric corrosion
AS/NZS 2699:- - - -	Built-in components for masonry construction
Part 1:2000	Wall ties
Part 2:2000	Connectors and accessories
Part 3:2000	Lintels and shelf angles (durability requirements)
AS/NZS 2908:- - - -	Cellulose-cement products
Amd 1 Dec '00 Part 1-2000	Corrugated sheets
Part 2-2000	Flat sheets
AS/NZS 4201:1994	Pliable building membranes and underlays – Methods of test
AS/NZS 4284:1995	Testing of building facades
AS/NZS 4534:1998	Zinc and zinc/aluminium-alloy coatings on steel wire
Amd 2 May '06 AS/NZS 4671:2001	Steel reinforcing materials
AS/NZS 4680:1999	Hot-dip galvanized (zinc) coating on fabricated ferrous articles

AMERICAN NATIONAL STANDARD

ANSI/AHA A135.6-1990	Hardboard siding

AMERICAN SOCIETY FOR TESTING AND MATERIALS

ASTM E96-1994	Standard test methods for water vapour transmission of materials

Copyright Standards New Zealand

© The Crown in right of New Zealand, administered by the New Zealand Standards Executive. Access to this standard has been sponsored by the Ministry of Business, Innovation, and Employment under copyright license LN001498. You are not permitted to reproduce or distribute any part of this standard without prior written permission from Standards New Zealand, on behalf of New Zealand Standards Executive, unless your actions are covered by Part 3 of the Copyright Act 1994.

AUSTRALIAN STANDARDS

AS 1214-1983	Hot-dip galvanized coatings on threaded fasteners (ISO metric coarse thread series)	Amd 1 Dec '00
AS 1302-1991	Steel reinforcing bars for concrete	
AS 1304-1991	Welded wire reinforcing fabric for concrete	
AS 1366:- - - -	Rigid cellular plastics sheets for thermal insulation	
Part 3:1992	Rigid cellular polystyrene – Moulded	
AS 1397-1993	Steel sheet and strip – Hot-dipped zinc-coated or aluminium/zinc-coated	Amd 1 Dec '00
AS 1649-1998	Timber – Methods of test for mechanical fasteners and connectors – Basic working loads and characteristic strengths	
AS 2049-1992	Roof tiles	Amd 1 Dec '00
AS 2050-1989	Fixing of roofing tiles	
AS 2780-1985	Refractories and refractory materials – Glossary of terms	
AS 2870:- - - -	Residential slabs and footings	
Part 1:1988	Construction	
AS 3566-1988	Screws – Self-drilling – For the building and construction industries	
AS 3700:2001	Masonry Structures	Amd 1 Dec '00

BRITISH STANDARDS

BS 1521:1972 (1994)	Specification for waterproof building papers
BS 3137:1972 (1995)	Methods for determining the bursting strength of paper and board
BS 4071:1966 (1993)	Specification for polyvinyl acetate (PVA) emulsion adhesives for wood
BS 4940:1994	Technical information on construction products and services
BS 6915:1988	Specification for design and construction of fully supported lead sheet roof and wall coverings
BS 6925:1988	Specification for mastic asphalt for building and civil engineering (limestone aggregate)
BSCP 143:- - - -	Code of practice for sheet roof and wall coverings
Part 5:1964	Zinc
Part 15:1973(1986)	Aluminium. Metric units
BS EN 1172:1997	Copper and copper alloys. Sheet and strip for building purposes

Copyright Standards New Zealand

© The Crown in right of New Zealand, administered by the New Zealand Standards Executive. Access to this standard has been sponsored by the Ministry of Business, Innovation, and Employment under copyright license LN001498. You are not permitted to reproduce or distribute any part of this standard without prior written permission from Standards New Zealand, on behalf of New Zealand Standards Executive, unless your actions are covered by Part 3 of the Copyright Act 1994.

OTHER DOCUMENTS

BUILDING INDUSTRY AUTHORITY
The New Zealand Building Code Handbook and Approved Documents

BUILDING RESEARCH ASSOCIATION OF NEW ZEALAND

BRANZ Bulletin 283, Sealed Joints in External Claddings – (1) Joint Design, 1991.
BRANZ Bulletin 284, Sealed Joints in External Claddings – (2) Sealants, 1991.
BRANZ Bulletin 304, Flashing Design, 1993.
BRANZ Evaluation Method EM1 Method for Evaluating the Strength and Stiffness of Structural Joints, 1999.
BRANZ Good Stucco Practice, 1996.
BRANZ Good Timber Cladding Practice, 1997.
BRANZ Good Concrete Floors and Basements Practice, 1998.
BRANZ Reprint No. 122, Solar-driven Moisture Transfer Through Absorbent Roofing Materials, 1993.
BRANZ Technical Paper P21:1991, A Wall Bracing Test and Evaluation Procedure. Supplement to P21: An Evaluation Method of P21 Test Results for Use with NZS 3604:1990.

Latest revisions

The users of this Standard should ensure that their copies of the above-mentioned New Zealand Standards and referenced overseas Standards are the latest revisions or include the latest amendments. Such amendments are listed in the annual Standards New Zealand *Catalogue* which is supplemented by lists contained in the monthly magazine *Standards* issued free of charge to committee and subscribing members of Standards New Zealand.

Copyright Standards New Zealand

© The Crown in right of New Zealand, administered by the New Zealand Standards Executive. Access to this standard has been sponsored by the Ministry of Business, Innovation, and Employment under copyright license LN001498. You are not permitted to reproduce or distribute any part of this standard without prior written permission from Standards New Zealand, on behalf of New Zealand Standards Executive, unless your actions are covered by Part 3 of the Copyright Act 1994.

FOREWORD

This Standard provides methods and details for the design and construction of timber framed structures not requiring specific engineering design.

A prime document in the building industry is the Building Code. Therefore, it is desirable that all industry related standards are able to be called up by the Building Industry Authority as Acceptable Solutions. This, along with changes in trade practices were the reasons for the review of NZS 3604:1990.

Since the passing of the Building Act it is a requirement in law that all new building work comply with the New Zealand Building Code (NZBC). The Building Code is a national performance based code requiring building elements and methods to meet three criteria: an **objective, functional requirements** and **performance requirements.** NZS 3604 has been prepared so that the Building Industry Authority will be able to cite it in its Approved Documents, as an Acceptable Solution, meeting certain performance requirements of the NZBC. The specific building code performances that NZS 3604 is intended to meet, are parts of Clauses B1 "Structure", B2 "Durability" and E2 "External Moisture". These clauses are copied in full in an Informative section at the rear of the Standard, for information.

A new and important performance requirement of buildings is durability. Buildings must now be durable for the expected life of the building, or meet other specific serviceability requirements dependent on the accessibility of a component, for repair or replacement. NZS 3604 now has a new section devoted to issues concerning durability. One key issue covered, is the degree of protection required for steel fixings and fastenings, for the various corrosive regions throughout New Zealand.

With the need to ensure compatibility with the Building Code and to fulfil the industry's expectations of a light timber framing standard, a comprehensive document has evolved. As a result, emphasis has been placed on the presentation of the document with "user friendliness" being of prime concern. An unequal two column format with strategic use of colour has contributed greatly to this aim.

NZS 3604 is used by a wide range of people in the building industry such as students, designers, builders, architects and engineers. However, due to the requirement for building consent documentation to show how the performance based requirements of the Building Code will be met, users of the document will predominantly be fulfilling the role of a designer. Consequently, the document has been set out generally in the sequence for the design of buildings. As an example, in this edition the bracing requirements have been put together in one specific section. This allows the designer to complete the bracing design for the whole building without having to refer to other sections. It is this trend that has been maintained throughout the document. To demonstrate consistency with the external moisture provisions of the Building Code, this edition also incorporates a new section entitled "The Building Envelope – Wall and Roof Claddings". Other notable improvements include: detailed figures, greater use of tables, additional lintel tables including those for other materials, statutory information and a place in the binder for other industry information.

AMENDMENT NO. 2

Standards New Zealand issued Amendment No. 4 to NZS 3603:1993 Timber structures standard on 31 March 2005. NZS 3603 forms the

Copyright Standards New Zealand

© The Crown in right of New Zealand, administered by the New Zealand Standards Executive. Access to this standard has been sponsored by the Ministry of Business, Innovation, and Employment under copyright license LN001498. You are not permitted to reproduce or distribute any part of this standard without prior written permission from Standards New Zealand, on behalf of New Zealand Standards Executive, unless your actions are covered by Part 3 of the Copyright Act 1994.

basis for the design solutions given in NZS 3604:1999 Timber framed buildings.

Amendment No. 4 to NZS 3603 resulted from the general acknowledgement that structural and framing timbers are not reliably achieving the engineering properties (stiffness and strength) specified in NZS 3603 and:

- Introduces and gives the engineering properties for new visual grades, being VSG8 and VSG10 for dry timber and G8 for green timber. These grades have had their engineering properties verified.
- Retains the existing No. 1 Framing visual grade, but down-rates its engineering properties.
- Introduces and gives the engineering properties for new machine stress grades called 'MSG' grades. MSG grades have had their engineering properties verified.
- Requires that where timber is verified, the verification be to the provisions of NZS 3622: 2004 Verification of timber properties.
- Requires the use of a lower bound Modulus of Elasticity (Elb) for members that do not act as part of a group of four or more members.

Amendment No. 2 to NZS 3604 provides for, and is limited to, the flow-on effects from Amendment No. 4 to NZS 3603. Amendment No. 2 therefore updates the provisions of NZS 3604 to account for the new grades MSG6, G8, VSG8/MSG8 and VSG10/MSG10 and engineering properties defined in Amendment No. 4 to NZS 3603.

The design philosophy for Amendment No. 2 remains the same as the original. Wherever errors in the design calculations existed the opportunity has now been taken to correct these.

Amendment No. 2 identifies the grade of timber in the title and also by the colour of the tables. Throughout the Amendment No. 1 Framing/ MSG6 tables are blue, VSG8/MSG8 tables are yellow and VSG10/ MSG10 tables are green.

Amendment No. 2 still provides a complete set of tables for No. 1 Framing and allows the use of No. 2 Framing for certain applications (see 8.5).

Framing practice has moved predominantly from green gauged framing to dry sizes. Therefore Amendment No. 2 gives actual minimum dried sizes in both the new and amended clauses and tables (see 2.3.4).

Wherever the term *Territorial Authority* appears, this has been replaced with *Building Consent Authority*.

Amendment No. 2 consists of 105 replacement pages which are identified in the document by amendment bars adjacent to the text. tables or figures that have been changed.

Amendment No. 2 was approved on 26 May 2006 by the Standards Council to be an amendment to NZS 3604:1999.

REVIEW OF STANDARDS

Suggestions for improvement of this Standard will be welcomed. They should be sent to the Chief Executive, Standards New Zealand, Private Bag 2439, Wellington 6140.

Copyright Standards New Zealand

© The Crown in right of New Zealand, administered by the New Zealand Standards Executive. Access to this standard has been sponsored by the Ministry of Business, Innovation, and Employment under copyright license LN001498. You are not permitted to reproduce or distribute any part of this standard without prior written permission from Standards New Zealand, on behalf of New Zealand Standards Executive, unless your actions are covered by Part 3 of the Copyright Act 1994.

SECTION 1

SCOPE AND INTERPRETATION

Objective 1-3

1.1 Scope 1-3

1.2 Interpretation 1-12

1.3 Definitions 1-13

Table

1.1 Classification of buildings 1-6

1.2 Basic live loads for floors and stairs 1-6

Figure

1.1 Flow chart for limitations and scope of NZS 3604 1-7

1.2 Buildings covered by this Standard 1-11

1.3 Definitions of spans and loaded dimensions 1-21

Copyright Standards New Zealand

© The Crown in right of New Zealand, administered by the New Zealand Standards Executive. Access to this standard has been sponsored by the Ministry of Business, Innovation, and Employment under copyright license LN001498. You are not permitted to reproduce or distribute any part of this standard without prior written permission from Standards New Zealand, on behalf of New Zealand Standards Executive, unless your actions are covered by Part 3 of the Copyright Act 1994.

Copyright Standards New Zealand

© The Crown in right of New Zealand, administered by the New Zealand Standards Executive. Access to this standard has been sponsored by the Ministry of Business, Innovation, and Employment under copyright license LN001498. You are not permitted to reproduce or distribute any part of this standard without prior written permission from Standards New Zealand, on behalf of New Zealand Standards Executive, unless your actions are covered by Part 3 of the Copyright Act 1994.

Objective

To provide suitable methods and details for the design and construction of timber framed buildings up to 3 *storeys* high. This Standard is intended to apply to domestic dwellings, most residential and some commercial and other buildings, without the need for *specific engineering design*.

Use of NZS 3604 as a means of compliance with the New Zealand Building Code

It is intended that sections 1 - 16 of NZS 3604 will be called up in the Approved Documents as an Acceptable Solution for meeting the following requirements of the New Zealand Building Code (*NZBC*):

B1 STRUCTURE
B1.3.1; B1.3.2; B1.3.4 for loads from B1.3.3(a), (b), (f), (g), (h), (j), (m), (p) and (q) i.e. for loads arising from gravity, earthquake, snow, wind and human impact, differential movement, non-structural elements and contents and creep and shrinkage.

B2 DURABILITY

E2 EXTERNAL MOISTURE
This Standard does not provide a complete Acceptable Solution for Clause E2 as it does not give full details, in all instances, of what is necessary to secure and weatherproof the building envelope. Where this Standard does not provide these details then proposals must also be submitted to, and approved by the *Building Consent Authority*.

Sections 17 to 20 of NZS 3604 are informative only and compliance with them is not necessary for either complying with NZS 3604 or with the NZBC.

Although this Standard describes the major components of the building envelope it does not in all situations fully describe their substrates, fixings, flashings and finishes. These details must be advised to the Building Consent Authority as part of the building consent application.

1 SCOPE AND INTERPRETATION

1.1 Scope

1.1.1 *Construction requirements*

NZS 3604 sets down construction requirements for timber framed buildings within the limitations specified in 1.1.2.

1.1.2 *Buildings covered by this Standard*

NZS 3604 applies only to buildings within the following limitations (this is not a complete list):

(a) Buildings shall be founded on *good ground*;

(b) Buildings shall be Category IV or V buildings (see table 1.1). Buildings not covered by this Standard are those without *external walls*, such as free standing carports and pergolas;

(c) The total height from the lowest *ground level* to the highest point of the roof shall not exceed 10 m;

Amd 1 Dec '00

(d) The design snow load shall be not greater than 1 kPa, as determined from section 15;

(e) Buildings shall have uses comprising:

(i) Domestic;

(ii) Residential. The buildings in this category comprise multi-unit or group dwellings, communes or maraes, boarding

C1.1.2

Any building or part of a building that does not comply with 1.1.2 is outside the scope of NZS 3604 and will require specific engineering design, unless covered by another Standard for buildings not requiring specific engineering design; for example, NZS 4229. Points to note are:

(b) Examples of Category V buildings are garages (on concrete floor), sheds and gazebos. Table 1.1 is based on table 2.3.1 of NZS 4203.

(e) The main body of NZS 3604 is written for domestic floor loads up to 2 kPa, see table 1.2. Table 1.2 is based on table 3.4.1 of NZS 4203. Section 14 covers residential and other floor loads up to 3 kPa.

Copyright Standards New Zealand

© The Crown in right of New Zealand, administered by the New Zealand Standards Executive. Access to this standard has been sponsored by the Ministry of Business, Innovation, and Employment under copyright license LN001498. You are not permitted to reproduce or distribute any part of this standard without prior written permission from Standards New Zealand, on behalf of New Zealand Standards Executive, unless your actions are covered by Part 3 of the Copyright Act 1994.

houses, halls of residence, holiday cabins, hostels, hotels, or nurse's homes (but excludes buildings with communal balconies);

(iii) Institutional. The buildings in this category comprise hospitals, old people's homes or health camps (but excludes those with operating theatres or rooms containing heavy equipment, i.e. where loads exceed those given in (v) below);

(iv) Educational. The buildings in this category comprise early childhood centres, colleges, day care institutions, centres for handicapped persons, kindergartens, schools or universities (but excludes buildings that have libraries with book stacking systems, i.e. where loads exceed those given in (v) below);

(v) Other buildings provided the loadings are demonstrated to the satisfaction of the *Building Consent Authority*, to be no more than 3 kPa uniformly distributed *load,* or 2.7 kN concentrated load on the floor, or 0.25 kPa uniformly distributed load on the roof.

The floor and roof live loadings applicable to (i) to (iv) shall be as given in table 1.2, provided that the floor loading shall not exceed 1.5 kPa for the uppermost floor of 3 *storey* buildings.

(f) Single *storey* buildings may include a *part storey* basement or a *part storey* in the roof space. Single *storey* buildings shall be supported on any one or a combination of the following *foundation* structures:

(i) *Piles*;

(ii) *Foundation walls*;

(iii) Concrete slab-on-ground.

(g) Two *storey* buildings shall comprise a timber upper floor and upper *storey* timber walls. The lower *storey* walls may be timber, or full height concrete masonry to NZS 4229. The lower floor may be slab-on-ground or suspended timber as follows:

(i) For buildings with slab-on-ground the lower *storey* walls shall be in timber *framing,* or full height concrete masonry to NZS 4229;

(ii) Buildings with the lower floor of suspended timber and lower *storey* timber walls shall be supported on either or a combination of *foundation walls* and *piles*;

(iii) Buildings with the lower floor of suspended timber and lower *storey* full height concrete masonry walls shall be supported on *foundations* to NZS 4229.

(h) Three *storey* buildings shall consist of the following:

(i) No more than 2 *storeys* supported on timber *framing*;

(ii) One *storey* shall be a *part storey* in a roof space;

Copyright Standards New Zealand

© The Crown in right of New Zealand, administered by the New Zealand Standards Executive. Access to this standard has been sponsored by the Ministry of Business, Innovation, and Employment under copyright license LN001498. You are not permitted to reproduce or distribute any part of this standard without prior written permission from Standards New Zealand, on behalf of New Zealand Standards Executive, unless your actions are covered by Part 3 of the Copyright Act 1994.

(iii) The middle *storey* and *part storey* shall be directly supported on a lower *storey* of concrete masonry walls and *foundation walls* to the provisions of NZS 4229;

Amd 1 Dec '00

(iv) The ground floor shall be either concrete slab-on-ground or a suspended timber or concrete floor to the provisions of NZS 4229.

(j) The slope of any roof plane shall not be steeper than 60° to the horizontal.

(j) The limitation on roof slope means that "A-frame" buildings will generally require specific engineering design.

(k) For the purpose of forming a *mansard roof* only, a wall of an uppermost *storey* may slope by up to 20°.

(k) Provision for mansard roofs is made in 8.4.2.

(m) The building wind zone determined from 5.2.1 and table 5.1 shall be low, medium, high or very high (i.e. L, M, H or VH). SED in table 5.1 indicates *specific engineering design* is required, which is outside the scope of NZS 3604.

(n) The *plan floor area* shall:

(i) Be unlimited for 1 or 2 *storey* buildings where all *storeys* are of timber frame;

(ii) Not exceed 300 m² for 2 *storey* buildings of other forms of construction;

(iii) Not exceed 250 m² for 3 *storey* buildings of other forms of construction.

(o) Buildings with *wings* or *blocks* shall be designed as if the *wing* or *block* was a separate building;

(p) Concrete slab-on-ground floors in accordance with 7.5 may be used for vehicle garages for vehicles up to 2500 kg tare.

See flow chart figure 1.1 and figure 1.2 for buildings covered by NZS 3604.

Copyright Standards New Zealand

© The Crown in right of New Zealand, administered by the New Zealand Standards Executive. Access to this standard has been sponsored by the Ministry of Business, Innovation, and Employment under copyright license LN001498. You are not permitted to reproduce or distribute any part of this standard without prior written permission from Standards New Zealand, on behalf of New Zealand Standards Executive, unless your actions are covered by Part 3 of the Copyright Act 1994.

Table 1.1 – Classification of buildings (see 1.1.2)

Category	Description
A Buildings not covered by this Standard	
I	Buildings dedicated to the preservation of human life or for which the loss of function would have a severe impact on society.
II	Buildings which as a whole contain people in crowds.
III	Publicly owned buildings which house contents of a high value to the community.
B Buildings covered by this Standard	
IV	Buildings not included in any other category.
V	Buildings of a secondary nature (see C1.1.2(b)). (The building code will be met or exceeded when NZS 3604 is used for Category V buildings). NOTE – NZS 3604 does not cover garage floors constructed of timber.

Table 1.2 – Basic live loads for floors and stairs (see 1.1.2(e))

Category	Spatial occupancy	Floor load (kPa)
1. Domestic	Non-habitable roof spaces Balconies and decks Other rooms, including service rooms	0.5 2.0 1.5
2. Residential	Bars and public lounges Bedrooms Balconies to single residences Dining rooms Corridors, stairs and landings Other rooms, except service rooms	3.0 1.5 2.0 3.0 3.0 3.0
3. Institutional	Bedrooms and wards Utility rooms	2.0 3.0
4. Educational	Class and lecture rooms Reading areas, excluding rooms with book stacking systems	3.0 3.0
5. Offices	General use, excluding storage	2.5
6. Roofs	Roofs without access Roofs with access	0.25 As for adjoining floor loadings

Copyright Standards New Zealand

© The Crown in right of New Zealand, administered by the New Zealand Standards Executive. Access to this standard has been sponsored by the Ministry of Business, Innovation, and Employment under copyright license LN001498. You are not permitted to reproduce or distribute any part of this standard without prior written permission from Standards New Zealand, on behalf of New Zealand Standards Executive, unless your actions are covered by Part 3 of the Copyright Act 1994.

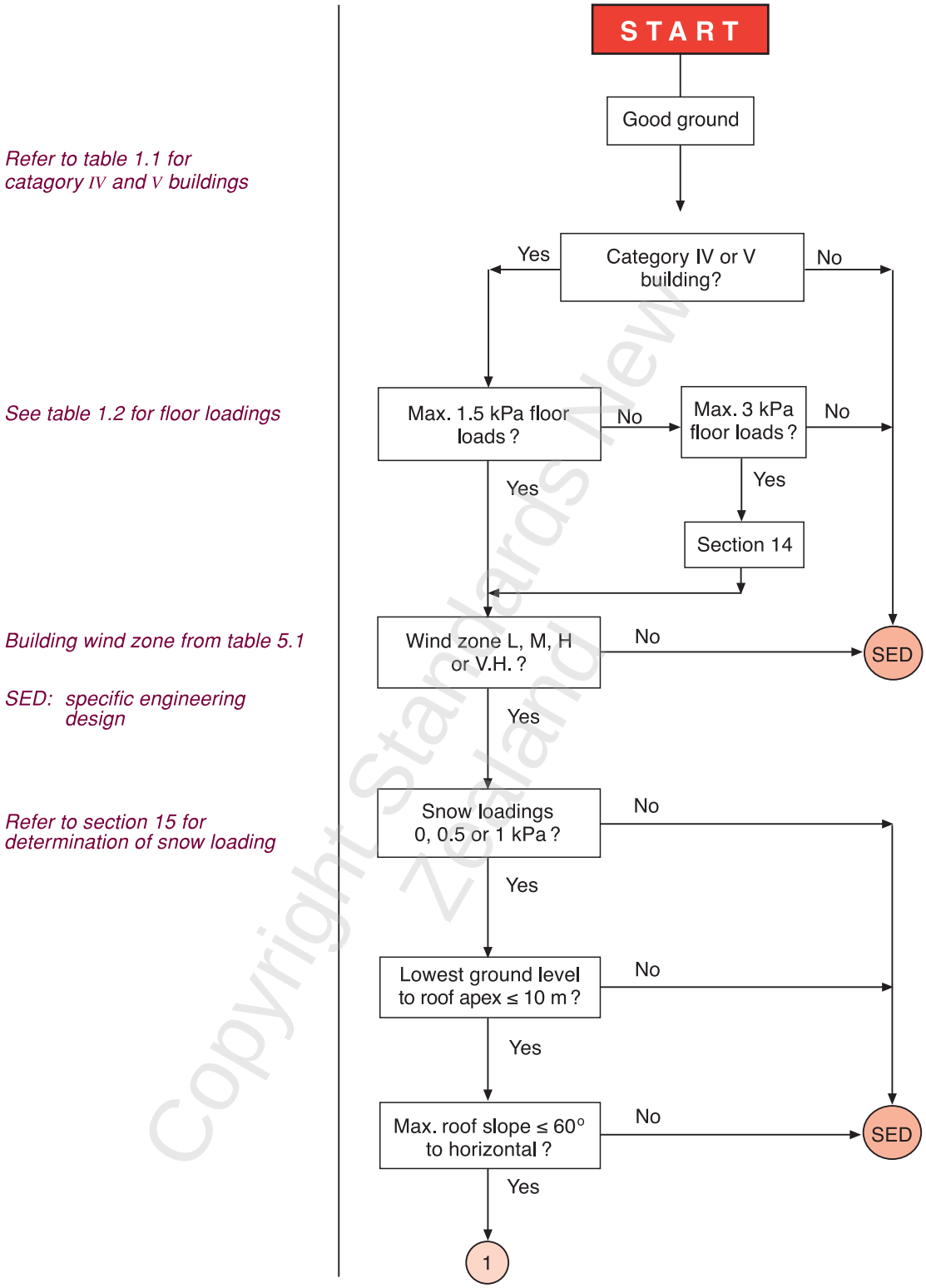

Amd 1 Dec '00

Figure 1.1 – Flow chart for limitations and scope of NZS 3604 (see 1.1.2)

Copyright Standards New Zealand

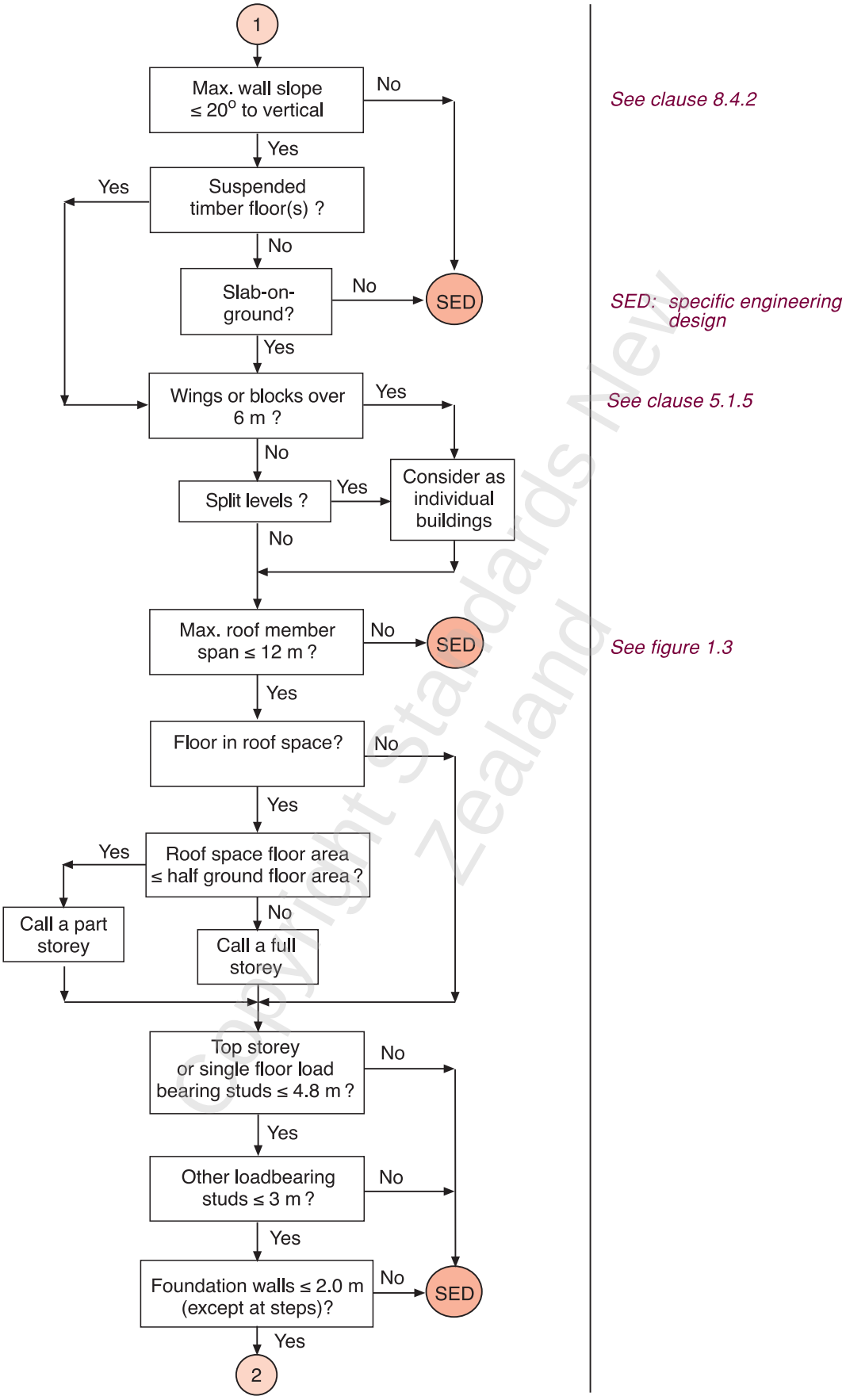

Figure 1.1 – Flow chart for limitations and scope of NZS 3604 (continued) (see 1.1.2)

© The Crown in right of New Zealand, administered by the New Zealand Standards Executive. Access to this standard has been sponsored by the Ministry of Business, Innovation, and Employment under copyright license LN001498. You are not permitted to reproduce or distribute any part of this standard without prior written permission from Standards New Zealand, on behalf of New Zealand Standards Executive, unless your actions are covered by Part 3 of the Copyright Act 1994.

Copyright Standards New Zealand

Foundations

SED: specific engineering design

Combinations of foundation walls, piles and slab-on-ground are permitted

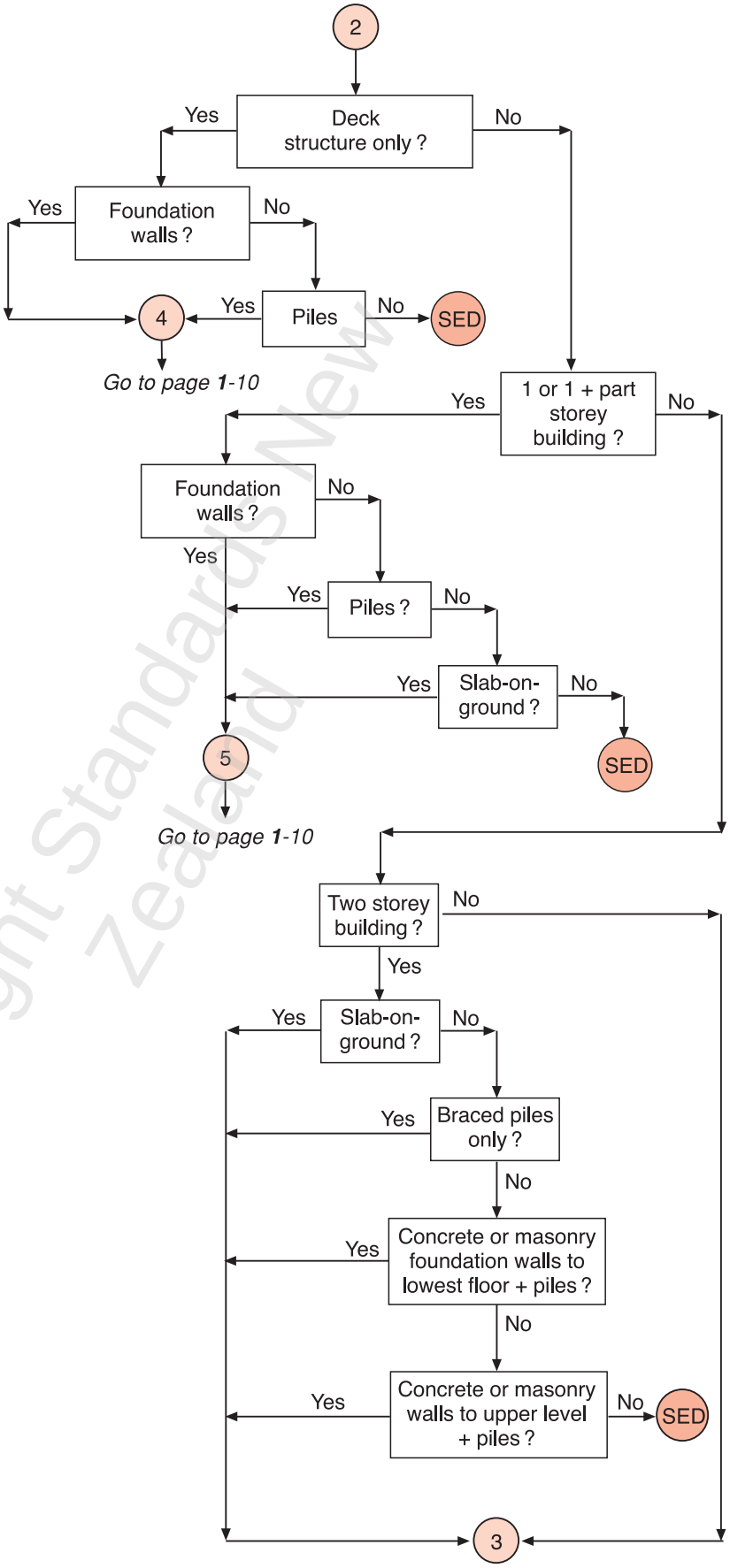

Figure 1.1 – Flow chart for limitations and scope of NZS 3604 (continued) (see 1.1.2)

Copyright Standards New Zealand

© The Crown in right of New Zealand, administered by the New Zealand Standards Executive. Access to this standard has been sponsored by the Ministry of Business, Innovation, and Employment under copyright license LN001498. You are not permitted to reproduce or distribute any part of this standard without prior written permission from Standards New Zealand, on behalf of New Zealand Standards Executive, unless your actions are covered by Part 3 of the Copyright Act 1994.

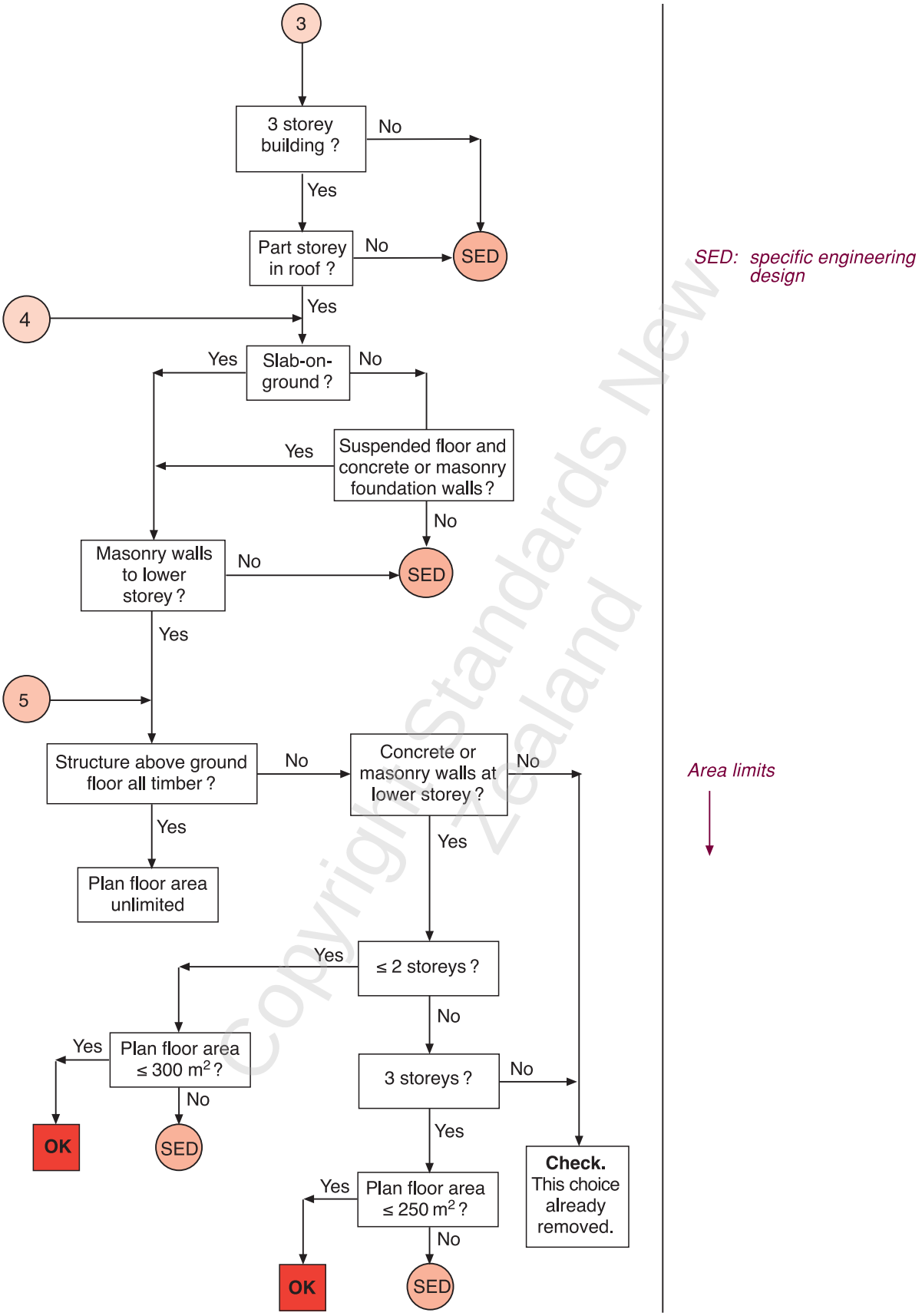

Figure 1.1 – Flow chart for limitations and scope of NZS 3604 (continued) (see 1.1.2)

© The Crown in right of New Zealand, administered by the New Zealand Standards Executive. Access to this standard has been sponsored by the Ministry of Business, Innovation, and Employment under copyright license LN001498. You are not permitted to reproduce or distribute any part of this standard without prior written permission from Standards New Zealand, on behalf of New Zealand Standards Executive, unless your actions are covered by Part 3 of the Copyright Act 1994.

Copyright Standards New Zealand

© The Crown in right of New Zealand, administered by the New Zealand Standards Executive. Access to this standard has been sponsored by the Ministry of Business, Innovation, and Employment under copyright license LN001498. You are not permitted to reproduce or distribute any part of this standard without prior written permission from Standards New Zealand, on behalf of New Zealand Standards Executive, unless your actions are covered by Part 3 of the Copyright Act 1994.

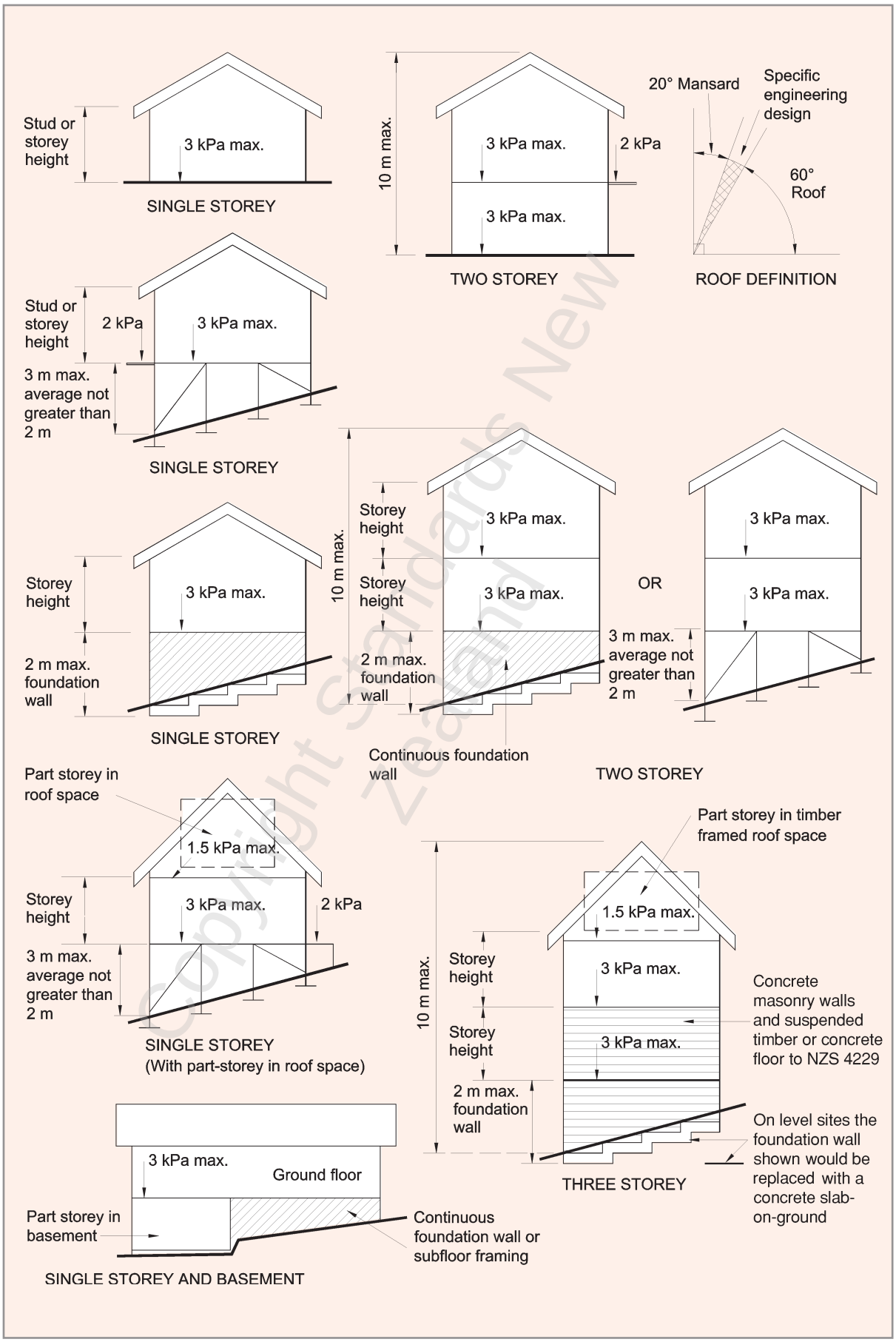

Amd 1 Dec '00

Amd 1 Dec '00

Amd 1 Dec '00

Figure 1.2 – Buildings covered by this Standard (see 1.1.2)

© The Crown in right of New Zealand, administered by the New Zealand Standards Executive. Access to this standard has been sponsored by the Ministry of Business, Innovation, and Employment under copyright license LN001498. You are not permitted to reproduce or distribute any part of this standard without prior written permission from Standards New Zealand, on behalf of New Zealand Standards Executive, unless your actions are covered by Part 3 of the Copyright Act 1994.

1.2 Interpretation

1.2.1

The word "shall" identifies a mandatory requirement for compliance with NZS 3604. The word "should" refers to practices which are advised or recommended.

1.2.2

Where this Standard has non-specific requirements such as the words "suitable", "adequate", "acceptable" or other similar qualifiers like "as far as is reasonably practicable" then the method described is outside the scope of the Standard as an Acceptable Solution to the *NZBC* and shall be to the satisfaction of the *Building Consent Authority.*

Also in this Standard, where reference is made to "the manufacturer's recommendations or instructions" or similar, these are outside the scope of this Standard as an Acceptable Solution to the *NZBC,* and shall be to the satisfaction of the *Building Consent Authority*.

Where this Standard requires *specific engineering design* (SED) then this is outside the scope of the Standard as an Acceptable Solution to the *NZBC* and shall be to the satisfaction of the *Building Consent Authority*.

Additional information (Informative) in sections 17 – 20 contains information, guidance or background material which may be of interest to the Standard's users.

Only use the values set out in clauses and tables and do not extrapolate the values.

C1.2.3

The placing of figures in the commentary column does not alter their status as mandatory provisions of this Standard.

1.2.3

Clauses prefixed by "C" and printed in italic type are intended as comments on the corresponding mandatory clauses. They are not to be taken as the only, or complete interpretation of the corresponding clause, nor should they be used for determining in any way the mandatory requirements of compliance within NZS 3604. NZS 3604 can be complied with if the comment is ignored.

Commentary clauses do not form part of the Standard as an acceptable solution to the *NZBC*.

The term "normative" identifies a mandatory requirement for compliance with NZS 3604.

The term "informative" identifies information provided for guidance or background which may be of interest to the Standard's users. Informative provisions do not form part of the mandatory requirements of the Standard nor do they form part of the Standard as an Acceptable Solution to the *NZBC*.

1.2.4

Where any clause in NZS 3604 contains a list of requirements, provisos, conditions, or the like, then each and every item in that list is to be adopted in order to comply with NZS 3604, unless the clause specifically states otherwise.

Copyright Standards New Zealand

© The Crown in right of New Zealand, administered by the New Zealand Standards Executive. Access to this standard has been sponsored by the Ministry of Business, Innovation, and Employment under copyright license LN001498. You are not permitted to reproduce or distribute any part of this standard without prior written permission from Standards New Zealand, on behalf of New Zealand Standards Executive, unless your actions are covered by Part 3 of the Copyright Act 1994.

1.2.5
The full titles of reference documents, cited in NZS 3604 are given in the list of Related Documents immediately preceding the Foreword.

1.2.6
Unless inconsistent with the context, and subject to 1.3, terms defined in the *NZBC* shall have the same meaning in NZS 3604.

1.3 Definitions
For the purposes of NZS 3604, the following definitions shall apply:

C1.3
Where words which are defined in 1.3 appear in the text of mandatory clauses of this Standard, they appear in italics. Where such words occur in tables, notes to tables or figures they are not in italics.

ANCHOR PILE. A *pile* directly supporting a *bearer*, and used to resist horizontal as well as vertical *loads*. The *pile* is embedded in concrete to a depth of 900 mm below cleared ground.

BALCONY. An open floor (i.e. no roof or walls) attached to the exterior of the main structure of a building and supported on cantilevered *joists*.

BATTEN. See **CEILING BATTEN, TILE BATTEN.**

BEARER. A beam supported on *jack studs*, *foundation walls*, *piles*, or piers and carrying *joists*, *jack studs*, or subfloor *framing*. See also **EAVES BEARER.**

BLOCK. See **WING.**

BLOCKING. Solid timber having the same depth as the *joists* and set at right angles between the *joists* to stiffen and prevent them from buckling.

BOND, RUNNING or **STRETCHER.** The bond when the units of each course overlap the units in the preceding course by between 25 % and 75 % of the length of the units.

BOTTOM PLATE. A *plate* other than a *wall plate* placed under the bottom ends of *studs*.

BOUNDARY JOIST or **HEADER JOIST**. A *joist* running along the outer ends of the floor *joists*.

BRACE. See **DIAGONAL BRACE, SUBFLOOR BRACE, WALL BRACING ELEMENT.**

BRACED PILE SYSTEM. A group of 2 *piles*, between which a *diagonal brace* is fixed. Each *pile* is embedded in concrete to a depth of 450 mm below cleared ground. A *braced pile system* is used to resist horizontal as well as vertical *loads*.

BRACE RUNNER. A horizontal member attached to the upper edges of ceiling *joists* or truss bottom chords to which a *diagonal brace* is attached.

BRACING. Any method employed to provide lateral support to a building.

BRACING CAPACITY. Strength of *bracing* of a whole building or of elements within a building. *Bracing capacity* is measured in "*Bracing Units*, BUs, and shall be determined from section 5.

BRACING DEMAND. The horizontal forces resisted by a whole building or by an element within a building. These horizontal forces are a result of wind or earthquake action. *Bracing demand* forces are measured in "*Bracing Units*", BUs. They shall be determined as set out in 5.2 (wind) or 5.3 (earthquake).

Copyright Standards New Zealand

© The Crown in right of New Zealand, administered by the New Zealand Standards Executive. Access to this standard has been sponsored by the Ministry of Business, Innovation, and Employment under copyright license LN001498. You are not permitted to reproduce or distribute any part of this standard without prior written permission from Standards New Zealand, on behalf of New Zealand Standards Executive, unless your actions are covered by Part 3 of the Copyright Act 1994.

BRACING LINE. A line along or across a building for controlling the distribution of *wall bracing elements*.

BRACING RATING. The lateral *load* resistance assigned to a subfloor or wall *bracing* system, when tested in accordance with the BRANZ P21 Test Procedure.

BRACING UNIT (BU). A *bracing unit* is a measure of:

(a) The horizontal force (*bracing demand*) on the building (1 kilonewton is equal to 20 *Bracing Units*).

(b) The resistance to horizontal force (*bracing capacity*) of building elements.

BUILDING CONSENT AUTHORITY A *Building Consent Authority* as defined in the Building Act 2004 and includes a Territorial Authority or a private body acting within the scope of their approval. Amd 2 May '06

CALL DIMENSIONS. The dimensions as given by NZS 3601 and by which timber is referred to in commercial transactions.

CANTILEVER PILE. A *driven timber pile* directly supporting a *bearer*, and used to resist horizontal as well as vertical *loads*.

CANTILEVERED FOUNDATION WALL. A *foundation wall* receiving lateral support only by means of cantilever action from its *footing*.

CAPACITY. The *load* resistance of a connector or fixing determined in accordance with 2.4.7.

CEILING BATTEN. A horizontal timber member fixed below *rafters*, ceiling *joists*, or truss bottom chords to which the ceiling *lining* is attached.

CEILING RUNNER. A beam supporting ceiling *joists*.

CLADDING. The outside or exterior weathering surface of a building.

CLEARED GROUND LEVEL (CGL). The *ground level* after completion of site excavation and removal of all harmful material, but before excavation for *foundations*.

CLEAT. A short member used in roof construction to tie a pair of *rafters* together immediately below the *ridge board*.

COLLAR TIE. A horizontal member connecting paired *rafters* together at intermediate points between the ceiling level and the level of the *ridge board*. It is often fixed directly above the *underpurlins*.

CONCRETE BLINDING or **SITE CONCRETE**. Concrete laid over exposed ground, to form a working surface.

CONCRETE SLAB BAY. The section of a concrete floor resulting from division of the slab by construction and control joints.

CONCRETE SLAB CONSTRUCTION JOINT. A joint that results from concrete in one section of the slab being poured up against another vertical section of slab that has already been poured and allowed to harden for 16 hours. Amd 1 Dec '00

Copyright Standards New Zealand

© The Crown in right of New Zealand, administered by the New Zealand Standards Executive. Access to this standard has been sponsored by the Ministry of Business, Innovation, and Employment under copyright license LN001498. You are not permitted to reproduce or distribute any part of this standard without prior written permission from Standards New Zealand, on behalf of New Zealand Standards Executive, unless your actions are covered by Part 3 of the Copyright Act 1994.

CONCRETE SLAB FREE JOINT. A construction joint where no reinforcement passes through the joint linking both sides of the concrete slab and the vertical faces of the joint are not in bonded contact with each other.

Amd 1 Dec '00

CONCRETE SLAB SHRINKAGE CONTROL JOINT. A line along which the horizontal strength of the slab is deliberately reduced so that any shrinkage in the slab will result in a crack forming along that line.

COUPLE-CLOSE ROOF. A roof construction in which roof timbers consist of a pair of *rafters* tied together at their feet by a ceiling *joist* to prevent spreading.

CURTAILED JOIST. A *joist* not of the full length as other *joists* but cut short and fixed to a *trimmer* at one end.

D. A deformed reinforcing bar of the stated diameter in millimetres.

DAMP-PROOF COURSE (DPC). A layer of durable vapour barrier placed between building elements to prevent the passage of moisture from one element to another.

DAMP-PROOF MEMBRANE (DPM). Sheet material or coating having a low water-vapour transmission, and used to minimize water-vapour penetration in buildings.

DECK. An open floor (i.e. no roof or walls) attached to the exterior of the main structure of a building and supported on ordinary *joists*.

DEEP JOIST. A floor *joist* whose depth is 4 or more times its width.

DIAGONAL BRACE. A member of a framed building fixed diagonally and used to resist tension or compression or both.

DIAPHRAGM. A building element such as a floor or ceiling capable of transferring *loads* in its own plane to boundary members.

DRAGON TIE. A member fixed diagonally across the *top plates* at the corner of a building, in the absence of a ceiling *diaphragm*, to support the *top plates* against wind *loads*, act as ceiling *bracing*, and prevent the walls from spreading.

DRIVEN TIMBER PILE. A natural round timber driven into the ground to serve as a *braced pile*, *cantilever pile*, or *ordinary pile*.

DWANG or **NOGGING**. A short member fixed between *framing* timbers.

EAVES BEARER or **SOFFIT BEARER**. A horizontal member attached to the end of a truss or a *rafter* and to a *stud,* or a *ribbon board,* or a *soffit plate,* and to which the eaves *lining* is attached. (Also known as a *sprocket*).

EXTERNAL WALL. An outer wall of a building.

FINISHED GROUND LEVEL (FGL). The level after all backfilling, landscaping, and surface paving have been completed.

FLAT ROOF. A roof having its exterior surface at an angle of less than 10° to the horizontal (that is, at a slope of less than 1 in 6).

Copyright Standards New Zealand

© The Crown in right of New Zealand, administered by the New Zealand Standards Executive. Access to this standard has been sponsored by the Ministry of Business, Innovation, and Employment under copyright license LN001498. You are not permitted to reproduce or distribute any part of this standard without prior written permission from Standards New Zealand, on behalf of New Zealand Standards Executive, unless your actions are covered by Part 3 of the Copyright Act 1994.

FLOOR LOAD. The uniformly distributed live *load* for floors as specified in table 1.2.

FOOTING. That portion of a *foundation* bearing on the ground and any adjoining portion that is reinforced so as to resist the bearing forces. It may be spread out to provide an increase in bearing area or an increase in stability.

FOUNDATION. Those parts of a building, transmitting and distributing *loads* to the ground through a *footing*.

FOUNDATION BLOCKS. See **PILES.**

FOUNDATION WALL. That part of the *foundation* comprising a concrete masonry or concrete wall supporting a building or part of a building, and not extending more than 2 m above the underside of the *footing*.

FRAMING. Timber members to which *lining*, *cladding*, flooring, or decking is attached or which are depended upon for supporting the structure, or for resisting forces applied to it.

GABLE. Outside wall between the planes of the roof and the line of the eaves.

GOOD GROUND. Any soil or rock capable of permanently withstanding an ultimate bearing *capacity* of 300 kPa (i.e. an allowable bearing pressure of 100 kPa using a factor of safety 3.0), but excludes:

(a) Potentially compressible ground such as top soil, soft soils such as clay which can be moulded easily in the fingers, and uncompacted loose gravel which contains obvious voids;

(b) Expansive soils being those that have a liquid limit of more than 50 % when tested in accordance with NZS 4402 Test 2.2, and a linear shrinkage of more than 15 % when tested from the liquid limit in accordance with NZS 4402 Test 2.6, and — Amd 1 Dec '00

(c) Any ground which could foreseeably experience movement of 25 mm or greater for any reason including one or a combination of:

land instability, ground creep, subsidence, seasonal swelling and shrinking, frost heave, changing ground water level, erosion, dissolution of soil in water, and effects of tree roots.

GROUND LEVEL. See **CLEARED GROUND LEVEL, FINISHED GROUND LEVEL, NATURAL GROUND LEVEL.**

HEAVY ROOF. A roof with roofing material (*cladding* and any *sarking*) having a mass exceeding 20 kg, but not exceeding 60 kg/m^2 of roof area. Typical examples are concrete tiles, slates and the like.

HEAVY WALL CLADDING. A wall *cladding* having a mass exceeding 80 kg/m^2, but not exceeding 220 kg/m^2 of wall area. Typical examples are clay and concrete masonry veneers.

HERRINGBONE STRUTTING. Members set diagonally to form a "x" pattern between the *joists,* to act as *blocking*.

HIP RAFTER. A *framing* timber which conforms to the slope of the intersection of 2 roof surfaces, meeting in a hip and into which *jack rafters* are trimmed.

Copyright Standards New Zealand

© The Crown in right of New Zealand, administered by the New Zealand Standards Executive. Access to this standard has been sponsored by the Ministry of Business, Innovation, and Employment under copyright license LN001498. You are not permitted to reproduce or distribute any part of this standard without prior written permission from Standards New Zealand, on behalf of New Zealand Standards Executive, unless your actions are covered by Part 3 of the Copyright Act 1994.

INTERNAL WALL. A wall other than an *external wall*.

JACK RAFTER. A short *rafter* extending from the *valley rafter* to the *ridge board* or *hip rafter* or *trimmer*, or from the *top plate* to the *hip rafter* or *trimmer*.

Amd 1 Dec '00

JACK STUD.

(a) A *stud* of less length than the full height, from *plate* to *plate* of wall of which it forms part; or

(b) A *stud* at *pile spacing* forming part of the supporting framing under the ground floor of a building.

JOIST. A horizontal *framing* member to which is fixed floor decking, or ceiling *linings,* and which is identified accordingly as a floor *joist* or ceiling *joist*. See **BOUNDARY JOIST, CURTAILED JOIST, DEEP JOIST, TRIMMER JOIST, TRIMMING JOIST.**

LIGHT ROOF. A roof with roofing material (*cladding* and any *sarking*), having a mass not exceeding 20 kg/m^2 of roof area. Typical examples are steel, copper, and aluminium roof *claddings* of normal thickness, 6 mm thick cellulose cement tiles, 6 mm thick corrugated cellulose cement, and the like, without *sarking*.

LIGHT WALL CLADDING. A wall *cladding* having a mass not exceeding 30 kg/m^2. Typical examples are weatherboards.

LINING. The covering for the inside of a room, cupboard, wall, ceiling, or other interior surface.

LINTEL. A horizontal *framing* timber spanning an opening in a wall.

LOAD. See **FLOOR LOAD.**

LOADBEARING STUD. A *stud* in a *loadbearing wall*.

LOADBEARING WALL. A wall supporting vertical loading from floors, ceiling *joists*, roof, or any combination thereof.

LOADED DIMENSION. The *loaded dimension* of structural elements which support other members at right angles shall be as defined by figure 1.3.

M. A steel bolt of the stated diameter in millimetres.

MANSARD ROOF. A symmetrical roof enclosing a full *storey* with 2 pitches on each side of a ridge, the steeper commencing at the eaves and intersecting with a flatter pitch finishing at the ridge. The steeper pitched part is formed from wall *framing,* sloped at maximum 20° from the vertical and the flatter part formed as roof *framing*, with both parts clad with roof *cladding*.

MEDIUM WALL CLADDING. A wall *cladding* having a mass exceeding 30 kg/m^2 but not exceeding 80 kg/m^2 of wall area (a typical example is stucco *cladding*).

MEMBER SPAN. The clear distance between supports, measured along the members. See figure 1.3.

Copyright Standards New Zealand

© The Crown in right of New Zealand, administered by the New Zealand Standards Executive. Access to this standard has been sponsored by the Ministry of Business, Innovation, and Employment under copyright license LN001498. You are not permitted to reproduce or distribute any part of this standard without prior written permission from Standards New Zealand, on behalf of New Zealand Standards Executive, unless your actions are covered by Part 3 of the Copyright Act 1994.

METAL ANGLE WALING. A horizontal member manufactured of metal angle, usually steel, checked into a saw cut in the face of *studs*.

NATURAL GROUND LEVEL. The *ground level* before the site has been cleared.

NOGGING. See **DWANG.**

NON-LOADBEARING STUD. A *stud* in a *non-loadbearing wall*.

Vertical loadings on non-loadbearing walls which result from the long term creep settlement of loadbearing members, such as trusses, rafters or joists, do not affect the "non-loadbearing" classification of such walls (see also C10.2.2.5).

NON-LOADBEARING WALL. A wall other than a *loadbearing wall* and may contain bracing elements. Amd 2 May '06

NZBC. New Zealand Building Code.

ORDINARY PILE. A *pile* required to resist vertical *loads* only.

PART STOREY. A basement, or a *storey* in a roof space, the floor area of which basement or *storey,* as the case may be, does not exceed 50 % of the area of the ground floor area of the same *wing* or *block* in which the *part storey* occurs.

PILE. A block or a column-like member used to transmit *loads* from the building and its contents to the ground. See **ANCHOR PILE, BRACED PILE, CANTILEVER PILE, DRIVEN TIMBER PILE, ORDINARY PILE.**

PITCHED ROOF. A roof having its exterior surface at an angle of 10° or more to the horizontal (that is, at a slope of 1 in 6 or steeper).

PLAN FLOOR AREA. The area of the site covered by the building in plan view not necessarily on one level (the foot print).

PLATE. A timber supported by a wall or *bearers* or *joists,* to support and distribute the *load* from floors, walls, roofs or ceiling. See **BOTTOM PLATE, TOP PLATE, WALL PLATE.**

POST. An isolated vertical member acting as a support.

PURLIN includes **TILE BATTEN**. A horizontal member laid to span across *rafters* or trusses and to which the roof *cladding* is attached. See also **UNDERPURLIN.**

R. A plain round reinforcing bar of the stated diameter in millimetres.

RAFTER. A *framing* timber normally parallel to the slope of the roof and providing support for *sarking*, *purlins* or roof covering. See **HIP RAFTER, JACK RAFTER, VALLEY RAFTER.**

REINFORCEMENT. Any form of reinforcing rod, bar, or mesh that complies with the relevant requirements of NZS 3109.

RIBBON BOARD includes **SOFFIT PLATE**. A horizontal *framing* timber secured to, or checked into, the edges of *studs* and supporting floor or ceiling *joists* or *eaves bearers*.

RIDGE BEAM. A single or, sometimes, double beam (timber pole construction) supporting the common *rafters* of a framed roof.

Copyright Standards New Zealand

© The Crown in right of New Zealand, administered by the New Zealand Standards Executive. Access to this standard has been sponsored by the Ministry of Business, Innovation, and Employment under copyright license LN001498. You are not permitted to reproduce or distribute any part of this standard without prior written permission from Standards New Zealand, on behalf of New Zealand Standards Executive, unless your actions are covered by Part 3 of the Copyright Act 1994.

RIDGE BOARD. The horizontal timber to which *rafters* of *couple-close roofs* are fixed at their upper ends.

ROOF. That part of the building having its upper surface exposed to the outside and at an angle of 60° or less to the horizontal. See **COUPLE-CLOSE ROOF, FLAT ROOF, HEAVY ROOF, LIGHT ROOF, PITCHED ROOF, SKILLION ROOF.**

ROOF STRUT. See **UNDERPURLIN STRUT.**

RUNNER. See **BRACE RUNNER, CEILING RUNNER.**

SARKING. Boarding or sheet material secured to *rafters*, trusses, or *purlins* and which may also serve as the ceiling *lining*.

SHEATHING. Material used as a backing to *cladding* and includes *sarking*.

SILL TRIMMER. A member supporting the wall *framing* beneath an opening and carrying wind loads to the *trimmer studs*.

SKILLION ROOF. A *pitched roof* where the ceiling *lining* is parallel and close to the roof *cladding*. The roof may be mono-pitch or may consist of more than one roof plane. These roofs often have *rafters* exposed below the ceiling.

SLEEPER. See **BEARER.**

SOFFIT BEARER. See **EAVES BEARER.**

SOFFIT PLATE. See **RIBBON BOARD.**

SPACING or **SPACED**. The distance at which members are *spaced* measured centre to centre.

SPAN. See **MEMBER SPAN** and **SUPPORT SPAN**.

SPECIFIC ENGINEERING DESIGN (SED). Requires calculation and design beyond the scope of this Standard.

SPROCKET. See **EAVES BEARER.**

STOREY. That portion of a building included between the upper surface of any floor and the upper surface of the floor next above, except that the topmost *storey* shall be that portion of a building included between the upper surface of the topmost floor, and the ceiling or roof above.

STRINGER. A horizontal *framing* timber on edge fixed to the side of a concrete or concrete masonry wall, to support the ends of *joists* or *rafters*.

STRUT. See **UNDERPURLIN STRUT.**

STRUTTING. Short members fixed between *joists* to stiffen and prevent them from buckling. See **HERRINGBONE STRUTTING.**

STRUTTING BEAM. A structural beam spanning between *loadbearing walls* from which *underpurlins* may be strutted.

Copyright Standards New Zealand

© The Crown in right of New Zealand, administered by the New Zealand Standards Executive. Access to this standard has been sponsored by the Ministry of Business, Innovation, and Employment under copyright license LN001498. You are not permitted to reproduce or distribute any part of this standard without prior written permission from Standards New Zealand, on behalf of New Zealand Standards Executive, unless your actions are covered by Part 3 of the Copyright Act 1994.

STUD. A vertical *framing* timber.

SUBFLOOR BRACE. A *bracing element* below the ground floor level.

SUPPORT SPAN. The clear distance along a member between supports, measured in plan (horizontally). See figure 1.3.

TERRITORIAL AUTHORITY. Wherever the term *Territorial Authority* appears replace this with *Building Consent Authority*. Amd 2 May '06

TILE BATTEN. See **PURLIN.**

TOP PLATE. A *plate* placed over the top ends of *studs*.

TRIMMER. A *framing* timber supported by 2 *trimming joists*, *studs* or *rafters*, to which is fixed one or more *curtailed joists*, *jack studs*, or *jack rafters*.

TRIMMING JOIST. A *joist* which is of the full span as other *joists,* but which on one side supports one or more *trimmers*.

TRIMMING STUD. A *stud* located on the side of an opening.

UNDERPURLIN. A horizontal timber member laid underneath *rafters*, supporting the *rafters* at intermediate points along their length.

UNDERPURLIN STRUT. A member used to transfer load from an *underpurlin* to a loadbearing wall or a *strutting* beam.

VALLEY BOARD. A board laid to support a valley gutter.

VALLEY RAFTER. A *rafter* which conforms to the slope of the intersection of 2 roof surfaces meeting in a valley and into which *jack rafters* are trimmed.

WALING. A horizontal *framing* member secured to, or checked into, the edges of *studs*. See **METAL ANGLE WALING.**

WALL. See **EXTERNAL WALL, FOUNDATION WALL, INTERNAL WALL, LOADBEARING WALL, NON-LOADBEARING WALL.**

WALL BRACING ELEMENT. A section of wall above the ground floor level that performs a *bracing* function.

WALL PLATE. A *plate* laid upon a concrete or concrete masonry *foundation wall*.

WING or **BLOCK**. A *wing* or *block* is any part of the building which projects by more than 6 m from the remainder of the building.

WIRE DOG. Galvanized or stainless steel wire, D or Z shaped nail, spiked at each end. Used for fixing timber together to resist uplift. (See figure 2.2).

Copyright Standards New Zealand

Amd 1 Dec '00

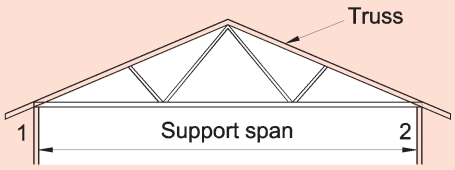

(A) SUPPORT SPAN

(A) For members 1 and 2:
Loaded dimension = $\frac{\text{Support span}}{2}$

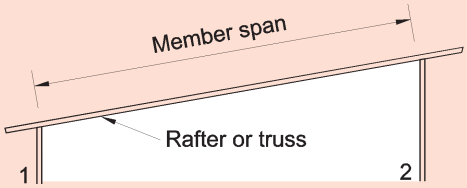

(B) MONOSLOPE ROOF

(B) For members 1 and 2:
Loaded dimension = $\frac{\text{Member span}}{2}$

Amd 1 Dec '00

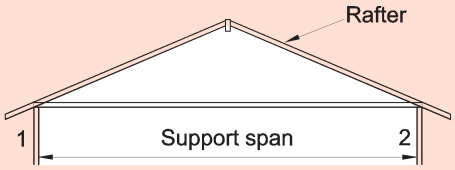

(C) COUPLE CLOSE ROOF OR TIED RAFTERS

(C) For members 1 and 2:
Loaded dimension = $\frac{\text{Support span}}{2}$

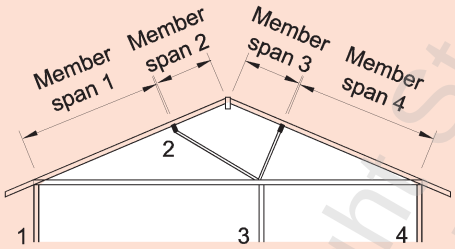

(D) FRAMED OR STRUTTED ROOF

(D) For member 1: Loaded dimension = $\frac{\text{span 1}}{2}$

For member 2: Loaded dimension = $\frac{\text{span 1 + span 2}}{2}$

For member 3:
Loaded dimension = $\frac{\text{span 1}}{2}$ + span 2 + span 3 + $\frac{\text{span 4}}{2}$

For member 4: Loaded dimension = $\frac{\text{span 4}}{2}$

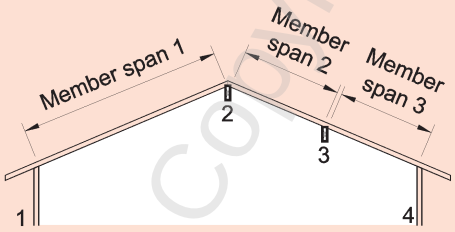

(E) RAFTERS SUPPORTED ON BEAMS OR WALLS

(E) For member 1: Loaded dimension = $\frac{\text{span 1}}{2}$

For member 2: Loaded dimension = $\frac{\text{span 1 + span 2}}{2}$

For member 3: Loaded dimension = $\frac{\text{span 2 + span 3}}{2}$

For member 4: Loaded dimension = $\frac{\text{span 3}}{2}$

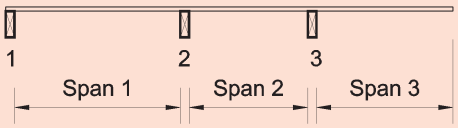

(F) FLOOR STRUCTURE

(F) For member 1: Loaded dimension = $\frac{\text{span 1}}{2}$

For member 2: Loaded dimension = $\frac{\text{span 1 + span 2}}{2}$

For member 3: Loaded dimension = $\frac{\text{span 2}}{2}$ + span 3

NOTE - Maximum eaves overhang dimension 750. Such overhangs may be ignored when calculating loaded dimensions.

Figure 1.3 – Definitions of spans and loaded dimensions (see 1.3)

Copyright Standards New Zealand

© The Crown in right of New Zealand, administered by the New Zealand Standards Executive. Access to this standard has been sponsored by the Ministry of Business, Innovation, and Employment under copyright license LN001498. You are not permitted to reproduce or distribute any part of this standard without prior written permission from Standards New Zealand, on behalf of New Zealand Standards Executive, unless your actions are covered by Part 3 of the Copyright Act 1994.

NOTES

© The Crown in right of New Zealand, administered by the New Zealand Standards Executive. Access to this standard has been sponsored by the Ministry of Business, Innovation, and Employment under copyright license LN001498. You are not permitted to reproduce or distribute any part of this standard without prior written permission from Standards New Zealand, on behalf of New Zealand Standards Executive, unless your actions are covered by Part 3 of the Copyright Act 1994.

Copyright Standards New Zealand

© The Crown in right of New Zealand, administered by the New Zealand Standards Executive. Access to this standard has been sponsored by the Ministry of Business, Innovation, and Employment under copyright license LN001498. You are not permitted to reproduce or distribute any part of this standard without prior written permission from Standards New Zealand, on behalf of New Zealand Standards Executive, unless your actions are covered by Part 3 of the Copyright Act 1994.

SECTION 2
GENERAL

2.1 Dimensions **2**-3
2.2 Tolerances **2**-3
2.3 Timber and wood-based products **2**-3
2.4 Fastenings and fabrication **2**-4
2.5 Reinforcing steel **2**-8

Table

2.1 Timber framing tolerances **2**-3

Figure

2.1 Protection of subfloor framing timber from direct contact with concrete **2**-5
2.2 Wire dog **2**-8

Amd 2
May '06

Copyright Standards New Zealand

© The Crown in right of New Zealand, administered by the New Zealand Standards Executive. Access to this standard has been sponsored by the Ministry of Business, Innovation, and Employment under copyright license LN001498. You are not permitted to reproduce or distribute any part of this standard without prior written permission from Standards New Zealand, on behalf of New Zealand Standards Executive, unless your actions are covered by Part 3 of the Copyright Act 1994.

Copyright Standards New Zealand

© The Crown in right of New Zealand, administered by the New Zealand Standards Executive. Access to this standard has been sponsored by the Ministry of Business, Innovation, and Employment under copyright license LN001498. You are not permitted to reproduce or distribute any part of this standard without prior written permission from Standards New Zealand, on behalf of New Zealand Standards Executive, unless your actions are covered by Part 3 of the Copyright Act 1994.

2 GENERAL

2.1 Dimensions

The cross section dimensions of components or fixings quoted in this Standard are those deemed to be adequate for the particular application. Identical material of larger dimensions may be used unless specifically excluded.

2.2 Tolerances

Tolerances shall be as given in table 2.1.

2.3 Timber and wood-based products

2.3.1

The timber species, preservative treatment, in-service moisture range and their end use environment shall comply with NZS 3602.

2.3.2

The *framing* grades to be used with this Standard shall be as follows. These grades, except No. 2 *Framing*, are as specified in NZS 3603.

(a) Dry Timber
- (i) No. 1 *Framing* or MSG6;
- (ii) VSG8 or MSG8;
- (iii) VSG10 or MSG10;
- (iv) No. 2 *Framing* to NZS 3631 is allowed for *non-loadbearing walls* as given in clause 8.5.1.1.

(b) Wet Timber
- (i) No. 1 *Framing*;
- (ii) G8.

Wet No. 1 *Framing* and G8 can be used as if it was dry No. 1 *Framing* or VSG 8 (or MSG 8) respectively provided the conditions of 2.3.4 are met.

Amd 2 May '06

Where different member sizes, *spans* or other design properties apply for the different grades, the Standard specifies the different requirements necessary. Where such distinction is not given then the member sizes, *spans* or other design properties given apply equally to all grades.

Table 2.1 – Timber framing tolerances

Item	Tolerances
Deviation from the position shown on plan for a building	15 mm
Deviation from vertical	15 mm per 2 storey height (5 mm per 2.4 m)
Deviation from vertical for buildings in excess of 2 full storeys	20 mm
Relative displacement between loadbearing walls in adjacent storeys intended to be in vertical alignment	5 mm
Deviation from line in plan: (a) In any length up to 10 m (b) In any length over 10 m	 5 mm 10 mm total
Deviation from horizontal: (a) In any length up to 10 m (b) In any length over 10 m	 5 mm 10 mm total
Straightness of corners (where 2 walls meet at right angles) Other studs (gradual bow)	2 mm in 2.4 m in both studs 6 mm in 2.4 m
Wall framing: (a) At mid-height under 3 m long horizontal straight edge (b) At mid-height under 1.3 m long horizontal straight edge	 6 mm gradual bow 1.5 mm out of line

Copyright Standards New Zealand

© The Crown in right of New Zealand, administered by the New Zealand Standards Executive. Access to this standard has been sponsored by the Ministry of Business, Innovation, and Employment under copyright license LN001498. You are not permitted to reproduce or distribute any part of this standard without prior written permission from Standards New Zealand, on behalf of New Zealand Standards Executive, unless your actions are covered by Part 3 of the Copyright Act 1994.

2.3.3

As shown in figure 2.1 *framing* timbers shall be separated from direct contact with concrete or masonry by either:

(a) A free-draining air space of not less than 12 mm; or

(b) A bituminous *damp-proof course* (DPC) or other suitable impervious material overlapping the timber by at least 6 mm;

This clause need not apply to:

(c) Timber treated to Hazard Class H4 of NZS 3640;

(d) Situations where the concrete or masonry is protected from moisture by a *DPM* or by virtue of its position in a building. Included are *bottom plates* of *internal walls* on concrete floors with a *DPM* and wall *framing*, or *stringers* fixed to concrete, or concrete masonry walls which are not exposed to moisture from the external environment, or from wet areas within a building.

2.3.4

This Standard applies to Radiata pine and Douglas Fir. The design solutions are for timber which is dry (maximum moisture content 18 %) throughout its design life. Timber may be installed green provided non-vertical members are propped and are not subjected to design loadings until they are dry.

The exceptions to the requirement that timber remain dry in service are as follows: *piles* to section 6, *bearers* to table 6.6(B), *stringers* to section 6, *joists* to table 7.1(b), cantilevered balcony floor *joists* to part table 7.2, *posts* to section 9 and timbers under roof overhangs (ie the exposed ends of *rafters*, *purlins*, *battens* and outriggers) to sections 10 and 15. These members can be installed either dry or green and can be wetted in service.

The cross-section dimensions of timber given in the Standard are the actual minimum dried sizes that must be used. Where green timber is used its dimensions shall be no less than the green gauged equivalent size given in the table below:

Actual minimum dried size (mm)	35	45	70	90	140	190	240	290
Green gauged equivalent size (mm)	37	47	69	94	144	194	244	294

The only exceptions to these requirements are for *piles* and *battens* which shall be sawn timber to the sizes required in clauses 6.4 and 10.2.1.16 respectively.

2.3.5

Where the Standard specifies members by call size those sizes shall be read as the actual minimum dried sizes as given in the table below:

Call sizes (mm)	25	40	50	75	100	150	200	250	300
Actual minimum dried size (mm)	19	35	45	70	90	140	190	240	290

2.4 Fastenings and fabrication

2.4.1

All parts of the building shall be securely fastened in accordance with 2.4.2, in order to resist all forces likely to be encountered during construction, or during the expected life of the building and to ensure that the building as a whole acts as a single structural entity.

Amd 2 May '06

C2.3.4

The Standard's provisions may be applicable to timbers other than Radiata pine and Douglas Fir such as other softwood species. Such use however, needs to be subject to demonstration of adequate structural performance and durability. Such designs constitute alternative solution proposals and need to be submitted to and be approved by the Building Consent Authority as part of the normal building consent process.

Over recent years framing practice has moved from predominantly green gauged framing to dry sizes. Further, those dry sizes are based on the Australian dried softwood sizes rather than the dry dressed sizes specified in NZS 3601. There are significant differences between these two sets of dried sizes in sizes 200 mm and over. To avoid confusion, the Standard, including its tables, now gives the actual minimum dried size based on the Australian sizes. This brings the tables into line with Australian practice and is simpler for the consumer.

This Standard does not provide design solutions for timber loaded in situations where prolonged high moisture contents can be expected, except for the members specifically noted in Clause 2.3.4. Such wet timber designs constitute alternative solution proposals and need to be submitted to the Building Consent Authority for approval as part of the normal building consent process. However, timber that is graded and installed green, namely G8 and green No. 1 Framing, or timber that has been installed dry and become wetted during the building process, may still be used with the Standard, provided it is propped and dried in place before being loaded and remains dry in service from that point on.

Copyright Standards New Zealand

© The Crown in right of New Zealand, administered by the New Zealand Standards Executive. Access to this standard has been sponsored by the Ministry of Business, Innovation, and Employment under copyright license LN001498. You are not permitted to reproduce or distribute any part of this standard without prior written permission from Standards New Zealand, on behalf of New Zealand Standards Executive, unless your actions are covered by Part 3 of the Copyright Act 1994.

2.4.2

Fastenings and connections shall be as specified in the relevant clause of this Standard or have a *capacity* as specified in the relevant clause of this Standard.

2.4.3

All timbers shall be set true to the required lines and levels with all mitres, butts, laps, housings, and other functions cut accurately so as to provide full and even contact over all bearing surfaces. Timber *framing* tolerances shall be as given in table 2.1.

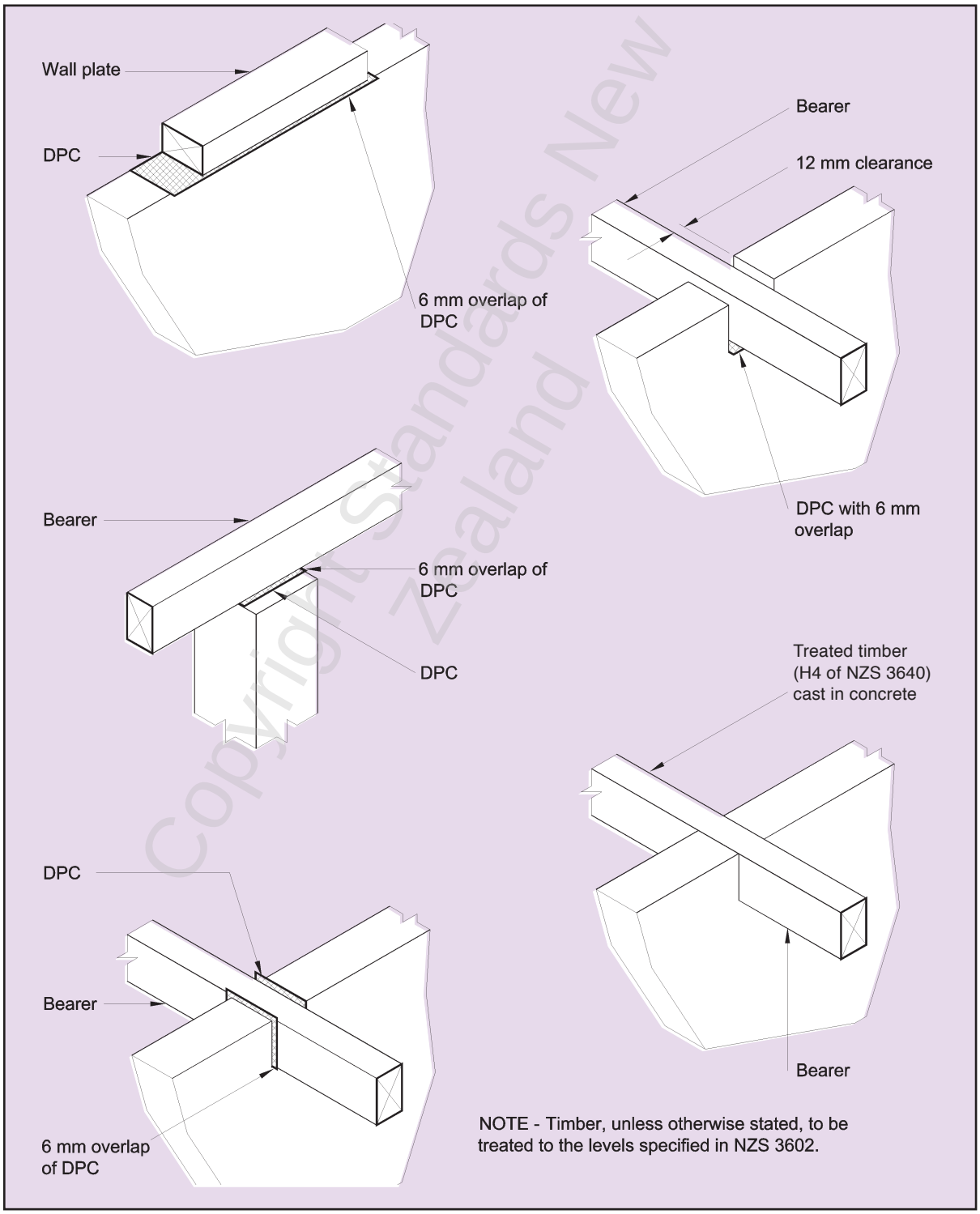

Figure 2.1 – Protection of subfloor framing timber from direct contact with concrete (see 2.3.3)

Amd 2 May '06

Copyright Standards New Zealand

© The Crown in right of New Zealand, administered by the New Zealand Standards Executive. Access to this standard has been sponsored by the Ministry of Business, Innovation, and Employment under copyright license LN001498. You are not permitted to reproduce or distribute any part of this standard without prior written permission from Standards New Zealand, on behalf of New Zealand Standards Executive, unless your actions are covered by Part 3 of the Copyright Act 1994.

2.4.4 *Nails (other than those used to attach roofing materials)*

2.4.4.1
Nailing requirements are specified by the length and diameter, sometimes also the number and edge clearance, throughout the text and in nailing schedules at the ends of some sections. Durability requirements are specified in table 4.3. The letters "FH" specify that flatheaded nails shall be used.

2.4.4.2
The length of nails passing through sheet material thicker than 10 mm shall be the length specified in the nailing schedules, or 3 times the sheet thickness, whichever is the greater.

2.4.4.3
The joints listed in the nailing schedule tables shall be made with the number of connectors of the specified type, length, and diameter driven in the specified locations into both pieces of timber at right angles, unless skewed nails are specified.

2.4.4.4
The depth of penetration into the point side piece of timber shall be at least 45 % of the length of the nail.

2.4.4.5
Where the nail size specified would cause splitting, the nail holes shall be pre-drilled to a diameter of 80 % of the nail diameter.

2.4.4.6
Nails in structural joints shall be fully driven.

2.4.4.7
Members in this Standard, except for *jack studs*, *bottom plates* and *top plates,* may be substituted with built-up members comprising up to six *framing* members nailed together, provided the following conditions are satisfied:

(a) In respect of the individual *framing* members comprising the built-up member:

(i) All *framing* members match the width and grade of the member being substituted, and

(ii) The combined thickness of the *framing* members equals or exceeds the thickness of the member being substituted.

(b) In respect of nailing requirements of the built-up member, where the built-up member comprises up to three members:

(i) Spacings of nails along the built-up member shall not exceed six times the thickness of the thinnest *framing* member, and

(ii) All nails shall penetrate at least 3/4 of the thickness of the last *framing* member and the nails shall be driven alternatively from either face of the built-up member, and

(iii) For members of width 140 mm or more there shall be at least two rows of nails across the member width at the centres required in (i) above.

(c) In respect of nailing requirements of the built-up member, where the built-up member comprises more than three members (see 8.5.1.2): Amd 2 May '06

Copyright Standards New Zealand

© The Crown in right of New Zealand, administered by the New Zealand Standards Executive. Access to this standard has been sponsored by the Ministry of Business, Innovation, and Employment under copyright license LN001498. You are not permitted to reproduce or distribute any part of this standard without prior written permission from Standards New Zealand, on behalf of New Zealand Standards Executive, unless your actions are covered by Part 3 of the Copyright Act 1994.

Amd 2
May '06

(i) The first three members shall be built up as described in 2.4.4.7. Additional members shall be fixed with nails twice as long, and spaced at six times the thickness of the additional member being added.

2.4.5 *Bolts and coach screws*

In bolted joints, washers shall be provided at each timber surface under the bolt or coach screw head and the nut. For an M12 bolt the washers shall be not less than 50 mm x 50 mm x 3 mm if square or not less than 55 mm diameter x 3 mm if round. (Bolts to comply with the requirements of AS/NZS 1111 and coach screws to AS/NZS 1393).

2.4.6 *Timber connectors or fixings*

2.4.6.1

Manufacturers of a timber connector or fixing shall provide the following information on each package of fixings, or on a label securely attached thereto:

(a) The name, or registered trade name, or make and address of manufacturer;

(b) The materials used in manufacture including fasteners and corrosion protection;

(c) The *capacity* of the timber connector or fixing in kN determined in accordance with 2.4.7;

(d) Fastener's requirements;

(e) Details of intended use.

2.4.6.2

Timber connectors to be tested for compliance with this Standard shall be sampled at random from a particular package and the test results recorded.

2.4.7 *Connector capacity and durability*

The *capacity* of a connector or fixing shall be calculated in accordance with the following equation:

$R = \phi \times Q_k \times n \times k$

where

R	=	connector *capacity* in kN
ϕ	=	capacity reduction factor from NZS 3603
Q_k	=	characteristic value obtained by test in accordance with BRANZ Evaluation Method EM1 or AS/NZS 2699:Part 2 as appropriate
n	=	number of tested elements making up the complete joint
k	=	modification factors from NZS 3603 (section 4) as appropriate to specific application.

In addition to verifying the *load* carrying *capacity* the manufacturer shall also demonstrate, to the satisfaction of the *Building Consent Authority*, that the fixings shall conform with the durability requirements of Clause B2 of the *NZBC*.

Copyright Standards New Zealand

© The Crown in right of New Zealand, administered by the New Zealand Standards Executive. Access to this standard has been sponsored by the Ministry of Business, Innovation, and Employment under copyright license LN001498. You are not permitted to reproduce or distribute any part of this standard without prior written permission from Standards New Zealand, on behalf of New Zealand Standards Executive, unless your actions are covered by Part 3 of the Copyright Act 1994.

2.4.8 *Wire dogs*

Wire dogs shall be of steel of at least 4.9 mm diameter and shall penetrate at least 30 mm into each piece of timber. Figure 2.2 shows the minimum dimensions required between the edge of the timber and the spike of the *wire dog*.

2.5 Reinforcing steel

Reinforcing bars and steel mesh shall comply with AS/NZS 4671. Reinforcing bars shall be grade 300E. Mesh shall be grade 500N or 500E. Amd 2 May '06

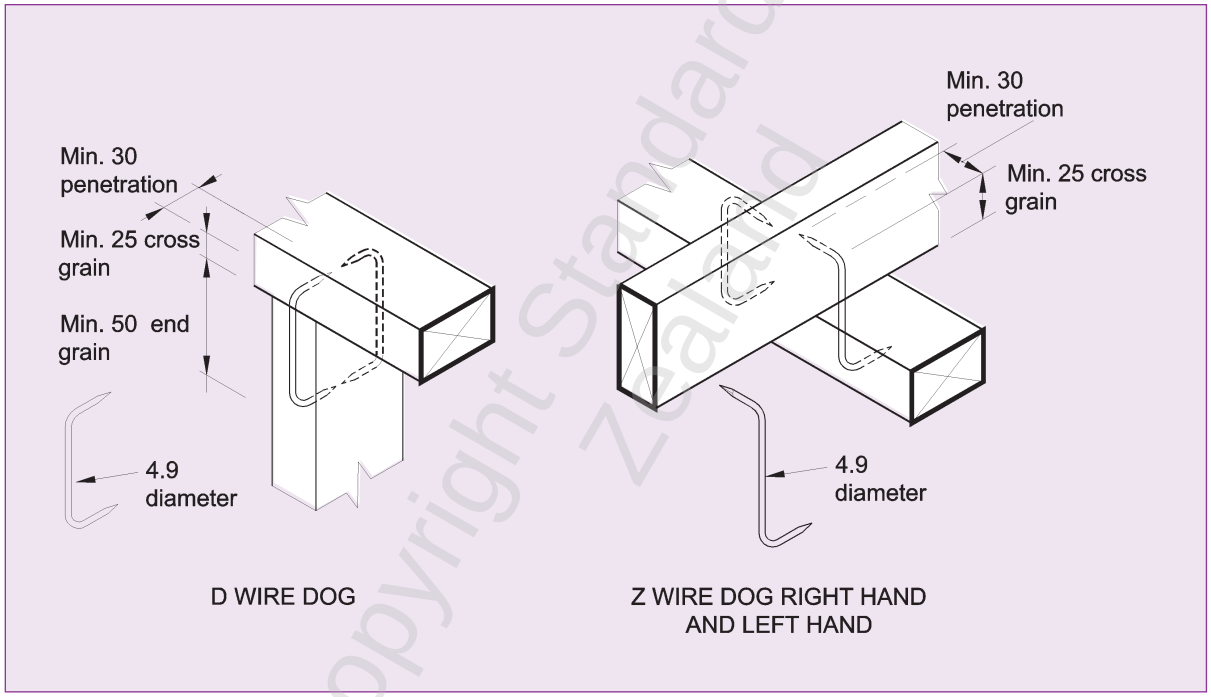

Figure 2.2 – Wire dog (see 2.4.8)

Copyright Standards New Zealand

© The Crown in right of New Zealand, administered by the New Zealand Standards Executive. Access to this standard has been sponsored by the Ministry of Business, Innovation, and Employment under copyright license LN001498. You are not permitted to reproduce or distribute any part of this standard without prior written permission from Standards New Zealand, on behalf of New Zealand Standards Executive, unless your actions are covered by Part 3 of the Copyright Act 1994.

SECTION 3
SITE REQUIREMENTS

3.1 Soil bearing capacity and site profile requirements **3**-3
3.2 Soil types **3**-4
3.3 Test method for soil bearing capacity **3**-5
3.4 Bearing **3**-6
3.5 Site preparation **3**-7
3.6 Water in subfloor spaces **3**-7

Figure

3.1 Relationship of foundation to sloping ground surface **3**-3

Copyright Standards New Zealand

© The Crown in right of New Zealand, administered by the New Zealand Standards Executive. Access to this standard has been sponsored by the Ministry of Business, Innovation, and Employment under copyright license LN001498. You are not permitted to reproduce or distribute any part of this standard without prior written permission from Standards New Zealand, on behalf of New Zealand Standards Executive, unless your actions are covered by Part 3 of the Copyright Act 1994.

Copyright Standards New Zealand

© The Crown in right of New Zealand, administered by the New Zealand Standards Executive. Access to this standard has been sponsored by the Ministry of Business, Innovation, and Employment under copyright license LN001498. You are not permitted to reproduce or distribute any part of this standard without prior written permission from Standards New Zealand, on behalf of New Zealand Standards Executive, unless your actions are covered by Part 3 of the Copyright Act 1994.

3 SITE REQUIREMENTS

3.1 Soil bearing capacity and site profile requirements

3.1.1

The site requirements of this Standard are concerned solely with soil conditions under or adjacent to the building.

If a site does not comply with this clause the *foundations* only shall be the subject of *specific engineering design*.

Foundations on expansive soils are outside of the scope of this Standard as an Acceptable Solution to the *NZBC*.

C3.1.1

Section 17 contains some information which may be of assistance to those designing foundations on expansive soils.

3.1.2

The *foundation* provisions of this Standard shall apply only for building sites such that:

(a) The *foundations* for the building are supported on *good ground* with a soil bearing capacity of greater than 300 kPa. Determination of *good ground* shall be as given in 3.1.3 (see definition in 1.3);

(b) Any *foundation* for a building erected at the top of a slope, shall be 600 mm behind the dotted line shown in figure 3.1;

(c) Fill, including hard fill, placed over undisturbed ground or certified fill, shall not exceed 600 mm in depth above *natural ground level*, if within 3 m of a *foundation*.

C3.1.2

(b) These provisions are to guard against erosion or frittering of soil that exposes the foundation and to avoid localized slip failures which threaten the foundation. Stability of the site as a whole is covered by 3.1.3.2(b).

(c) This limitation is required, as moderate depths of earth fill over a large area adjacent to building foundations can cause the underlying soil to consolidate to a depth of approximately twice the width of the fill. Such consolidation can cause differential settlement of the building foundations and thus cause damage to the building. Typically, earth fills are placed adjacent to foundations for the construction of stairs, terraces, landscaping and built-up ground under concrete floor slabs.

Copyright Standards New Zealand

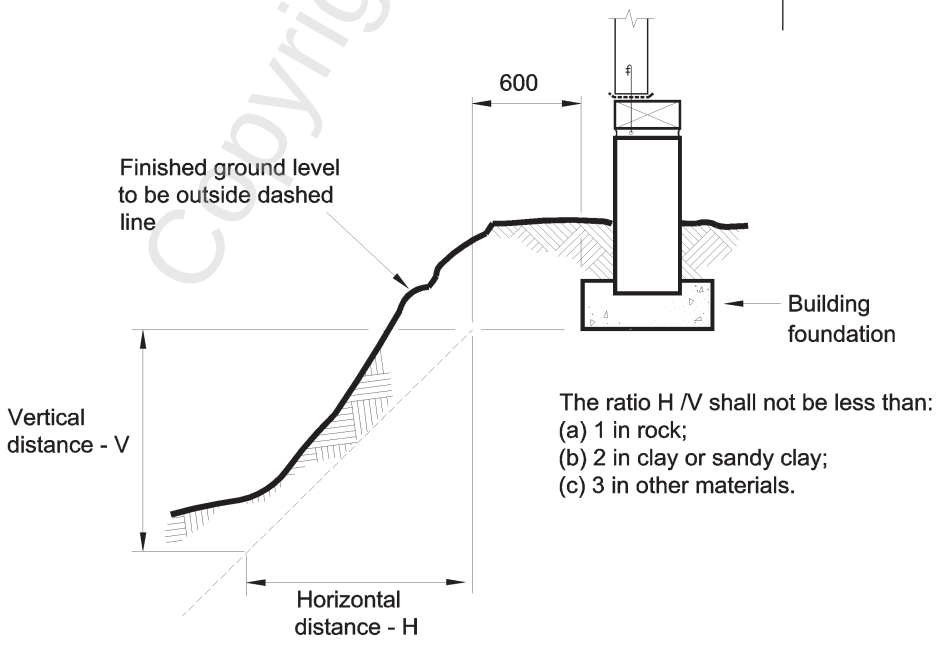

Figure 3.1 – Relationship of foundation to sloping ground surface (see 3.1.2(b))

© The Crown in right of New Zealand, administered by the New Zealand Standards Executive. Access to this standard has been sponsored by the Ministry of Business, Innovation, and Employment under copyright license LN001498. You are not permitted to reproduce or distribute any part of this standard without prior written permission from Standards New Zealand, on behalf of New Zealand Standards Executive, unless your actions are covered by Part 3 of the Copyright Act 1994.

3.1.3 *Determination of good ground*

C3.1.3.1
Good ground may also be verified by a subsoil investigation but this is outside the scope of this Standard.

Tests in accordance with 3.3 offer a comparatively simple method for establishing whether or not an ultimate bearing strength of 300 kPa may be assumed.

3.1.3.1
The soil supporting the *footings* shall be assumed to be *good ground* if all of the conditions of 3.1.3.2 are met and either:

(a) Adjacent established buildings of a similar type supported on *footings* similar to those required by this Standard and on similar soils show no signs of unsatisfactory behaviour attributable to soil conditions; or

(b) Dynamic cone penetrometer (also called Scala Penetrometer) tests, in accordance with 3.3, have been performed establishing that the supporting soils are *good ground*.

3.1.3.2
The site and soil conditions requiring to be met are:

(a) Reasonable enquiry, the Project Information Memorandum (PIM) and site observation show no evidence of buried services and none are revealed by excavation for *footings*; and

(b) Reasonable enquiry, the PIM and site observations show no indications or records of land slips having occurred in the immediate locality; and

(c) Reasonable enquiry shows no evidence of earth fill on the building site, and no fill material is revealed by excavation for *footings*. This shall not apply where a certificate of suitability of earth fill for residential development has been issued in terms of NZS 4431 in respect of the building site, and any special limitations noted on that certificate are complied with; and

(d) Excavation for *footings* does not reveal buried organic topsoil, soft peat or soft clay (see 3.2.1),

The test and the investigations required by this clause shall be performed by people with appropriate skills, to the approval of the *Building Consent Authority*.

3.2 Soil types

3.2.1 *Soft peat, soft clay and expansive soils*

3.2.1.1
For the purposes of 3.1.3.2(d), peat or clay soil shall be regarded as soft if a natural chunk of the soil (not remoulded material or loose shavings) can be easily moulded in the fingers. (Soil that exudes between the fingers when squeezed in a fist shall be regarded as very soft.)

3.2.1.2
For the purpose of 3.1.3.2(d) clays shall be regarded as expansive clays if their soil properties, in soil mechanic terms, exceed the values listed in the definition of *good ground* (b) in 1.3.

Copyright Standards New Zealand

© The Crown in right of New Zealand, administered by the New Zealand Standards Executive. Access to this standard has been sponsored by the Ministry of Business, Innovation, and Employment under copyright license LN001498. You are not permitted to reproduce or distribute any part of this standard without prior written permission from Standards New Zealand, on behalf of New Zealand Standards Executive, unless your actions are covered by Part 3 of the Copyright Act 1994.

3.3 Test method for soil bearing capacity

3.3.1
This test method shall be used to establish that the soil supporting the *foundations* may be assumed to have an ultimate bearing capacity of not less than 300 kPa as required by 3.1.2(a).

3.3.2
The apparatus shall consist of the following:

(a) A dynamic cone penetrometer conforming to the dimensions and masses given in Test 6.5.2 of NZS 4402 (similar equipment is sometimes referred to as the Scala Penetrometer);

(b) A scale or measuring rod graduated in millimetres and accurate to 1 mm;

(c) A sight board or other suitable datum.

3.3.3
The method of test shall be as described in Test 6.5.2 of NZS 4402; either procedure 1 or procedure 2 may be used.

3.3.4
The tip of the penetrometer shall be driven to a depth below the underside of the proposed *footing*, of not less than 1.2 m or twice the width of the widest *footing*, whichever is the deeper. As an alternative to driving, the penetrometer may be used within a probe hole augured for the purpose, provided that no account shall be taken of any blow made when the probe hole is less than 300 mm above the tip of the penetrometer.

3.3.5
A bore hole of not less than 50 mm diameter shall be augured at the site of each penetrometer test. The bore hole shall be taken to the same depth as the tip of the penetrometer, but at no stage shall the hole be deeper than the tip. For each bore hole the following information shall be recorded for each 300 mm, or part thereof, below ground surface (stating whether this is original *ground level* or *cleared ground level* as appropriate):

(a) Soil types and colours;

(b) Presence of any stones, gravel, or other hard material;

(c) Presence of any topsoil, peat, fill, or other foreign material;

(d) Ground water level;

(e) Soil strength of any peat or clay encountered, tested on natural chunks (not remoulded material or loose shavings) thus:

Stiff:	Cannot be moulded in the fingers
Firm:	Can be moulded in the fingers only by strong pressure
Soft:	Can be moulded in the fingers easily
Very soft:	Exudes between the fingers when squeezed in the fist

(f) Presence of expansive soils.

Copyright Standards New Zealand

© The Crown in right of New Zealand, administered by the New Zealand Standards Executive. Access to this standard has been sponsored by the Ministry of Business, Innovation, and Employment under copyright license LN001498. You are not permitted to reproduce or distribute any part of this standard without prior written permission from Standards New Zealand, on behalf of New Zealand Standards Executive, unless your actions are covered by Part 3 of the Copyright Act 1994.

3.3.6
The soil below the underside of the *foundations* may be assumed to have a bearing pressure of not less than 300 kPa when:

(a) None of the following is encountered below the depth of the underside of the proposed *footing* at any test site:

(i) Organic topsoil;

(ii) Soft or very soft peat;

(iii) Soft or very soft clay that contains stones, gravel, or other hard material;

(iv) Fill material, except where a certificate of suitability has been issued in terms of NZS 4431: and

(b) The number of blows per 75 mm depth of penetration below the underside of the proposed *footing* at each test site exceeds:

(i) Three down to a depth equal to the width of the widest *footing* below the underside of the proposed *footing*;

(ii) Two at greater depths; and

(c) Comparison of the results at all test sites shows that soil conditions are closely similar at each test site.

3.3.7
The number of blows per 75 mm may be obtained by averaging the number of blows for greater depths not exceeding 300 mm.

3.3.8
Test sites shall be selected so as to give adequate information about the soil over the entire plan area of the proposed building; provided that there shall be not less than 4 test sites for a building not exceeding 200 m^2 plan area, with not less than one additional test site for each 100 m^2 additional plan area of building.

3.3.9
The position of each test site in relation to proposed *foundations* shall be recorded.

3.4 Bearing

3.4.1
All *foundations* shall bear upon solid bottom in undisturbed *good ground* material or upon firm fill for which a certificate of suitability has been issued in terms of NZS 4431 (see 3.1.3.2(c)).

Where *good ground* is at a depth greater than 600 mm, the excavation between the *good ground* and the *foundation* base may be filled with 10 MPa concrete.

3.4.2
The minimum depth of *footings* below the *cleared ground level* shall be 200 mm.

C3.4.2
The depth of the foundation below ground level is not to be confused with the thickness of the footing, as being the same requirement. "Cleared ground level" is used as the depth datum because this level is not usually altered by future landscaping, thus retaining the lateral support of the building.

Copyright Standards New Zealand

© The Crown in right of New Zealand, administered by the New Zealand Standards Executive. Access to this standard has been sponsored by the Ministry of Business, Innovation, and Employment under copyright license LN001498. You are not permitted to reproduce or distribute any part of this standard without prior written permission from Standards New Zealand, on behalf of New Zealand Standards Executive, unless your actions are covered by Part 3 of the Copyright Act 1994.

3.5 Site preparation

3.5.1

Before a building is erected on any site, all rubbish, noxious matter, and organic matter shall be removed from the area to be covered by the building.

3.5.2

In suspended floor construction, (but not in slab-on-ground construction, refer section 7) firm turf and close-cut grass may remain provided that for the purposes of complying with 3.3.5, *cleared ground level* shall be taken as the underside of soil containing organic matter.

3.6 Water in subfloor spaces

Water shall not be allowed to accumulate in the building's subfloor. Measures to ensure this does not happen are outside the scope of this Standard. However, they shall be fully detailed on plans and specifications and submitted to the *Building Consent Authority* for approval.

Copyright Standards New Zealand

NOTES

© The Crown in right of New Zealand, administered by the New Zealand Standards Executive. Access to this standard has been sponsored by the Ministry of Business, Innovation, and Employment under copyright license LN001498. You are not permitted to reproduce or distribute any part of this standard without prior written permission from Standards New Zealand, on behalf of New Zealand Standards Executive, unless your actions are covered by Part 3 of the Copyright Act 1994.

Copyright Standards New Zealand

© The Crown in right of New Zealand, administered by the New Zealand Standards Executive. Access to this standard has been sponsored by the Ministry of Business, Innovation, and Employment under copyright license LN001498. You are not permitted to reproduce or distribute any part of this standard without prior written permission from Standards New Zealand, on behalf of New Zealand Standards Executive, unless your actions are covered by Part 3 of the Copyright Act 1994.

SECTION 4
DURABILITY

4.1 General **4**-3

4.2 Classification of exposure zones **4**-3

4.3 Timber and wood-based products **4**-3

4.4 Steel fixings and fastenings **4**-6

4.5 Brick veneer ties and lintels **4**-9

4.6 Reinforcing and fixings in stucco **4**-9

4.7 Underlay or sheathing **4**-9

4.8 Concrete **4**-10

4.9 Sealant usage and durability **4**-11

4.10 Flashings **4**-11

Table

4.1 Protection required for steel fixings and fastenings excluding nails **4**-7

4.2 Galvanizing of steel components other than nails and screws **4**-8

4.3 Steel items such as nails and screws used for framing and cladding ..... **4**-9 Amd 1 Dec '00

4.4 Protection for brick ties and lintels supporting brick veneer using AS/NZS 2699 ..... **4**-10

4.5 Material compatibility chart: What works with what **4**-12

Figure

4.1 Corrosion zone map **4**-4

4.2 "Sheltered" and "Exposed" **4**-6

Copyright Standards New Zealand

© The Crown in right of New Zealand, administered by the New Zealand Standards Executive. Access to this standard has been sponsored by the Ministry of Business, Innovation, and Employment under copyright license LN001498. You are not permitted to reproduce or distribute any part of this standard without prior written permission from Standards New Zealand, on behalf of New Zealand Standards Executive, unless your actions are covered by Part 3 of the Copyright Act 1994.

Copyright Standards New Zealand

© The Crown in right of New Zealand, administered by the New Zealand Standards Executive. Access to this standard has been sponsored by the Ministry of Business, Innovation, and Employment under copyright license LN001498. You are not permitted to reproduce or distribute any part of this standard without prior written permission from Standards New Zealand, on behalf of New Zealand Standards Executive, unless your actions are covered by Part 3 of the Copyright Act 1994.

4 DURABILITY

4.1 General

This section provides a means of compliance with Clause B2 of the *New Zealand Building Code*.

4.2 Classification of exposure zones

4.2.1

Building sites shall be classified as being in sea spray zones or zones 1, 2, 3 or 4, depending on the severity of exposure to wind-driven sea salt or to geothermal gases.

4.2.2

Sea spray zones and zones 1, 2, 3 and 4 are shown in figure 4.1.

4.2.3

Amd 1 Dec '00

The sea spray zone referred to in table 4.1 is defined as within 500 m of the sea including harbours, or 100 m from tidal estuaries and sheltered inlets, as well as areas shown in white on figure 4.1. The sea spray zone also includes all offshore islands including Waiheke, Great Barrier, Stewart Island and the Chatham Islands.

4.2.4

Amd 1 Dec '00

"Geothermal hot spots" are mainly found in Zone 4 but may occur elsewhere.

4.2.5

Localized areas subject to corrosive industrial atmospheres are outside the scope of this Standard.

4.2.6

Amd 1 Dec '00

If local knowledge indicates that a zone is too conservative, the *Building Consent Authority* may approve the use of a lesser zone, but this will be an alternative solution to the *NZBC*.

4.3 Timber and wood-based products

4.3.1

The timber species, grade, preservative treatment, in-service moisture range and their end use environment shall comply with NZS 3602.

C4.2

Section 4 presents a simple solution to what is a very complex problem. It is acknowledged that in some instances this may be a conservative solution. If the corrosion exposure zone, determined for a particular site from section 4, appears to be too severe, then the applicant may reclassify the site. Such reclassification however would be outside the scope of NZS 3604 as an Acceptable Solution to the New Zealand Building Code, and would be an alternative solution. The alternative solution would need to be submitted to, and approved by, the Building Consent Authority as part of the building consent process.

To assist the Building Consent Authority in its assessment of an alternative solution, it is suggested that the applicant would need to elaborate on all their considerations and in particular would need to address the following issues:

In Sea Spray Zones:

(a) Direction of prevailing wind from the sea;
(b) Prevalence of breaking surf;
(c) Existence of salt spray residue on windows or cladding of adjacent buildings;
(d) Existence of constant smell of salt in the air;
(e) Wind classification of site.

In Zone 1 areas
Shelter provided by ridges or spurs, large belts of trees or other such features.

In Zone 4
Location of building in relation to geothermal hot spots and prevailing wind.

In all zones
Performance of adjacent buildings.

Copyright Standards New Zealand

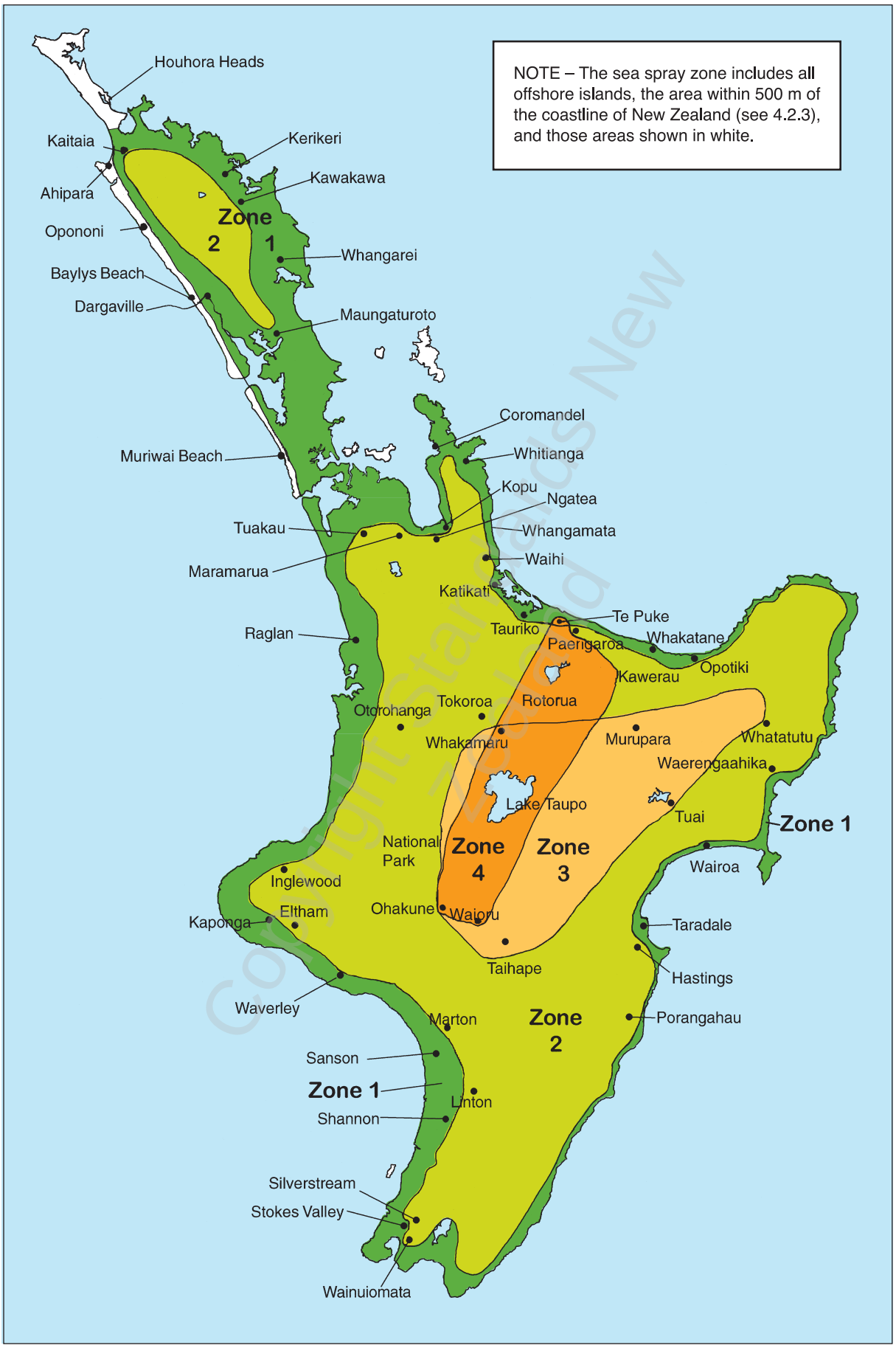

Figure 4.1 – Corrosion zone map (see 4.2)

© The Crown in right of New Zealand, administered by the New Zealand Standards Executive. Access to this standard has been sponsored by the Ministry of Business, Innovation, and Employment under copyright license LN001498. You are not permitted to reproduce or distribute any part of this standard without prior written permission from Standards New Zealand, on behalf of New Zealand Standards Executive, unless your actions are covered by Part 3 of the Copyright Act 1994.

Amd 1 Dec '00

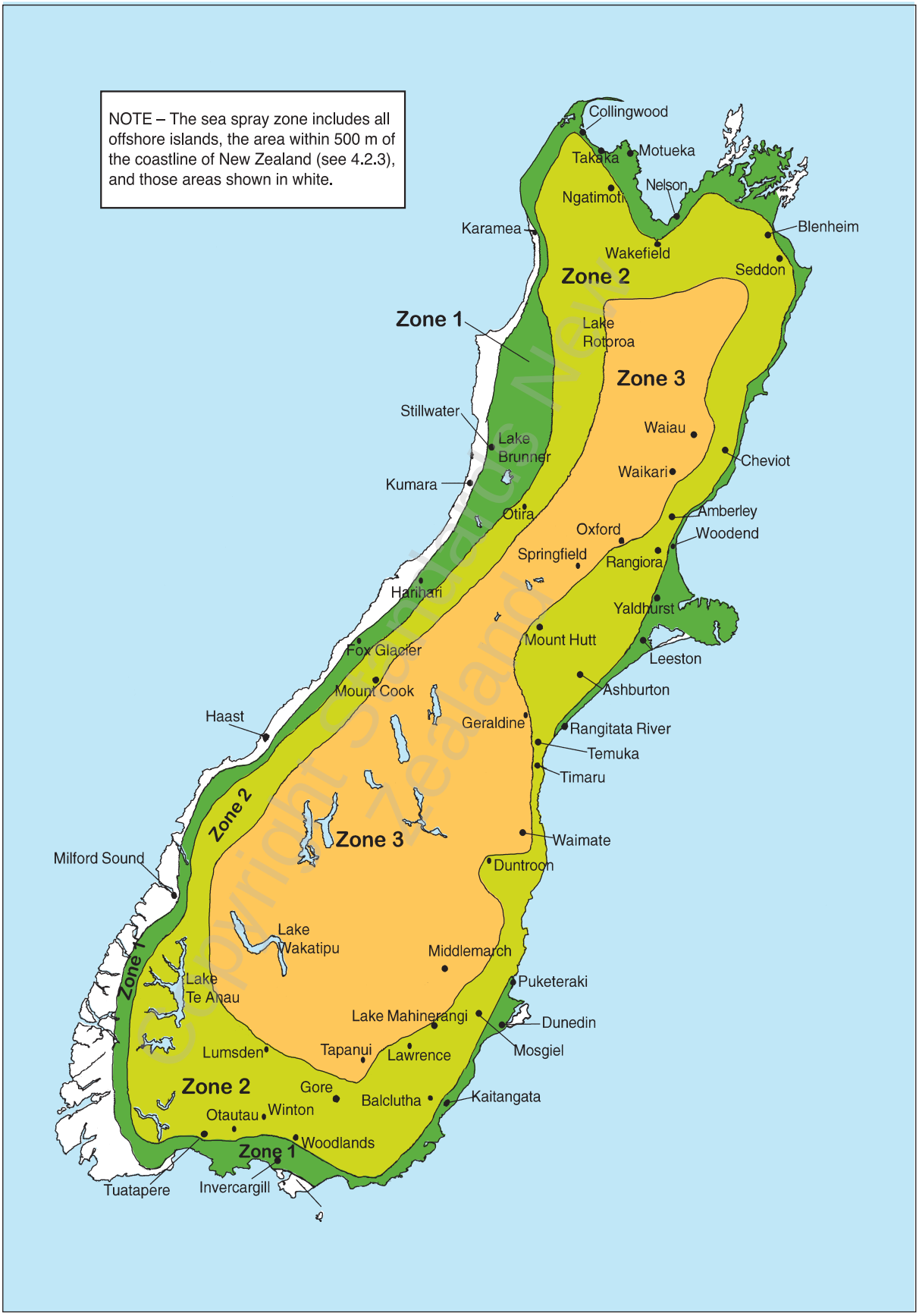

Figure 4.1 – Corrosion zone map (continued) (see 4.2)

Amd 1
Dec '00

© The Crown in right of New Zealand, administered by the New Zealand Standards Executive. Access to this standard has been sponsored by the Ministry of Business, Innovation, and Employment under copyright license LN001498. You are not permitted to reproduce or distribute any part of this standard without prior written permission from Standards New Zealand, on behalf of New Zealand Standards Executive, unless your actions are covered by Part 3 of the Copyright Act 1994.

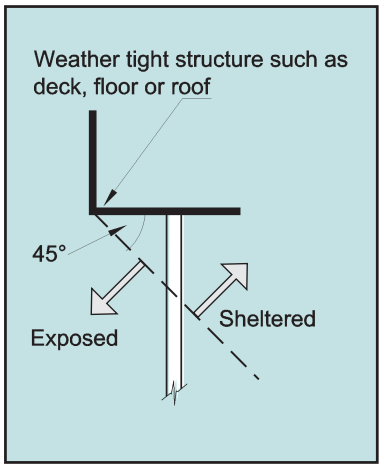

Amd 1 Dec '00

Figure 4.2 – "Sheltered" and "Exposed"
(see table 4.1)

C4.3.4.2
Perforated foil does not provide protection from ground atmosphere (refer to NZS 3602).

4.3.2
All timber and wood-based products shall be protected against damage from moisture, and against significant variations of moisture content, both before and after installation or enclosure.

4.3.3 *Timber*
Framing timber shall be separated from concrete or concrete masonry in accordance with 2.3.3.

4.3.4 *Wood-based products*

4.3.4.1
Wood-based products (e.g. particleboard, fibreboard) shall be manufactured to AS/NZS 1859. Wood-based products used for flooring in areas likely to be subject to watersplash such as in bathrooms, kitchens and laundries, shall be protected by an impervious finish or *lining* with sealed joints. *NZBC* E3/AS1 has a list of acceptable finishes and *linings*.

4.3.4.2
Wood-based products used for flooring shall be in accordance with AS/NZS 1859.1 Class 2 flooring. They shall be no closer to exposed ground than 550 mm and be protected from exterior exposure.

4.3.4.3
Medium density wood-based products shall not be exposed to ground atmosphere or be used externally. It shall not be used for flooring. Amd 1 Dec '00

4.3.4.4
Plywood products manufactured to AS/NZS 2269 used for flooring in areas likely to be subject to water splash such as in bathrooms, kitchens and laundries, shall be H3 treated or protected by an impervious finish or *lining* with sealed joints. *NZBC* E3/AS1 has a list of acceptable finishes and *linings*. Where plywood is used in dry areas it does not need to be treated.

4.3.5 *Timber decks*
Preservation treatment of members of timber decks shall comply with NZS 3602. Steel fastenings and fixings shall be to 4.4.

4.4 Steel fixings and fastenings

C4.4
Steel fixings and fastenings will corrode at an accelerated rate in areas immediately surrounding geothermal fumeroles and boreholes within zone 4. The intensity and type of activity of the hot spot and the prevailing wind also affect the rate of corrosion.

Corrosion of ferrous fasteners will cause rapid deterioration of adjacent timber.

Manufacturers should clearly label their components to indicate the weight of the galvanizing.

4.4.1
Table 4.1 sets out the protection required for steel fixings and fastenings to meet durability requirements. The following conditions apply:

(a) For subfloor fixings and fastenings, provide a well drained subfloor area free of ponding;

(b) Components of fixings and fastenings of compatible metals shall all be of a durability at least equal to that required.

4.4.2
Galvanized steel components shall have galvanized coating masses in accordance with table 4.2. Refer also to table 4.1 which requires additional protection to be provided in some cases.

Copyright Standards New Zealand

© The Crown in right of New Zealand, administered by the New Zealand Standards Executive. Access to this standard has been sponsored by the Ministry of Business, Innovation and Employment under copyright license LN001498. You are not permitted to reproduce or distribute any part of this standard without prior written permission from Standards New Zealand, on behalf of New Zealand Standards Executive, unless your actions are covered by Part 3 of the Copyright Act 1994.

© The Crown in right of New Zealand, administered by the New Zealand Standards Executive. Access to this standard has been sponsored by the Ministry of Business, Innovation, and Employment under copyright license LN001498. You are not permitted to reproduce or distribute any part of this standard without prior written permission from Standards New Zealand, on behalf of New Zealand Standards Executive, unless your actions are covered by Part 3 of the Copyright Act 1994.

Table 4.1 – Protection required for steel fixings and fastenings excluding nails[1] (see 4.4.1)

Zones/Environment	Material/Protection
Closed (dry, internal location, not subject to airborne salts or rain wetting)	
(A) Anywhere in New Zealand	Mild steel (uncoated, non-galvanized)
Treated timber piles (sub-floor)	
(B) Connections within 600 mm of the ground	Treat as exposed, for the appropriate zone – see H – J below
(C) Connections more than 600 mm from the ground	Treat as exposed or sheltered, for the appropriate zone: see E – J below
Roof spaces (All zones, all roof claddings)	
(D) (a) Nail plates	Continuously coated galvanized steel nail plates[2]
(b) Wire dogs, bolts	Hot-dip galvanized steel[2]
Sheltered (open to airborne salts, but not rain washed)[4]	
(E) Sea spray zone	Stainless steel, type 304[3]
(F) Zone 1	
(a) Subfloors and other situations vented more than 7000 mm^2/m^2	Treat as exposed – see H, I below
(b) Subfloors and other situations vented 7000 mm^2/m^2 or less	Hot-dip galvanized steel[2]
(G) Zones 2, 3	Hot-dip galvanized steel[2]
Exposed (open to airborne salts and rain wetting)[4]	
(H) Sea spray zone	Type 304 Stainless steel[3]
(I) Other zones (not geothermal)	Type 304 stainless steel[3] or hot-dip galvanized plus additional protection[5]
Geothermal areas	
(J) Within 50 m of a bore, mudpool, steam vent, or other fume source	Type 316 stainless steel, or hot-dip galvanized steel[2] + epoxy powder coating[5]

(1) Items described in this table are steel fasteners required to last 50 years, used for joining timber, such as nail plates, bolts, brackets, wire dogs and similar, but not including nails or screws (which are described in Table 4.3).
(2) All galvanizing weights to steel shall be as given in Table 4.2.
(3) Type 304 stainless steel is sufficient to comply with NZBC requirements, but may have surface rust. Type 316 may be used where appearance is a consideration but exceeds the requirements of the NZBC.
(4) "Sheltered" shall be that above a 45° line drawn from the lower edge of a projecting weather tight structure such as a floor, roof or deck. "Exposed" shall be below that 45° line. See figure 4.2.
(5) Epoxy powder coating and other additional protection shall be as given in 4.4.4 and 4.4.5.

Amd 1
Dec '00

Copyright Standards New Zealand

© The Crown in right of New Zealand, administered by the New Zealand Standards Executive. Access to this standard has been sponsored by the Ministry of Business, Innovation, and Employment under copyright license LN001498. You are not permitted to reproduce or distribute any part of this standard without prior written permission from Standards New Zealand, on behalf of New Zealand Standards Executive, unless your actions are covered by Part 3 of the Copyright Act 1994.

Table 4.2 – Galvanizing of steel components other than nails and screws (see 4.4.2)

Component	Durability (years)	Standard	Protection required
Bolts in any location that requires galvanizing (see table 4.1)	50	AS/NZS 4680 and AS 1214	375 g/m² average (check Standards for detail)
Nail plates and brackets used in sheltered or exposed locations	50	AS/NZS 4680	Not less than 390 g/m² (but must comply with Tables 1 and 2 of the Standard)
Nail plates used in roof spaces	50	AS 1397	Z275
Wire dogs in any location that requires galvanizing (see table 4.1)	50		260 g/m²
Mild steel angles for masonry veneer	50	AS/NZS 2699.3	600 g/m²
Wall ties	50	AS/NZS 2699.1	430 g/m²
Sheet metal fittings and reinforcing used in stucco	15	AS 1397	Z275
Stucco wire reinforcing	15	AS/NZS 4534	From 140 g/m² to 170 g/m² depending upon thickness of wire (check Standards for detail)
Hidden galvanized flashings	50	AS 1397	Z450 (1)(2)
Exposed galvanized flashings	15	AS 1397	Z450 (3)

(1) See 4.10.2.
(2) A coating of 50 µm minimum of a non-inhibitive epoxy primer plus 125 µm min. of high-build epoxy micaceous iron oxide. See AS/NZS 2699 for further details.
(3) See 4.10.3.

Amd 1 Dec '00

Copyright Standards New Zealand

4.4.3
Where a galvanized fitting or fixing does not have the mass of galvanizing required in 4.4.2 but has a minimum of 250 g/m², a protective coating as outlined in 4.4.4 or 4.4.5 shall be used to bring it to the durability required of galvanized steel.

This clause does not apply to fixings or fastenings within 50 m of geothermal hot spots or to the last category in table 4.1.

4.4.4 *Bolts*
Additional protection for galvanized steel bolts as required by table 4.1 shall be:

(a) 100 µm epoxy powder coating of the entire galvanized bolt and nut system; or

(b) High build epoxy coatings. Reference No. 13, AS/NZS 2312.

4.4.5 *Plates*
Additional protection for galvanized steel plates as required by table 4.1 shall be:

(a) 100 µm thick epoxy powder coating; or

Amd 1 Dec '00

© The Crown in right of New Zealand, administered by the New Zealand Standards Executive. Access to this standard has been sponsored by the Ministry of Business, Innovation, and Employment under copyright license LN001498. You are not permitted to reproduce or distribute any part of this standard without prior written permission from Standards New Zealand, on behalf of New Zealand Standards Executive, unless your actions are covered by Part 3 of the Copyright Act 1994.

(b) For surfaces not in contact with treated timber, a roof paint system consisting of an oil-based galvanized steel primer and a high gloss acrylic exterior paint with a total minimum dry film thickness (DFT) not less than 120 µm; or

Amd 1 Dec '00

(c) Duplex coating of 50 µm minimum of a non-inhibitive epoxy primer plus 125 µm minimum of high-build epoxy micaceous iron oxide. See AS/NZS 2699 for further details.

4.4.6 *Nails*

The materials for nails shall be as given in table 4.3.

Table 4.3 – Steel items such as nails and screws used for framing and cladding (see 4.4.6)

Amd 1 Dec '00

Building location	Nail or screw use			
	Cladding that acts as bracing (50 year durability)	Non-structural cladding (15 year durability)	Framing in "Closed" areas(1) including roof spaces	Framing in "Sheltered" and "Exposed" areas(1)
Zone 1 and sea spray zone	Stainless steel (2) or silicon bronze or protected galvanized steel (3)	Galvanized steel (4)	Mild steel	Galvanized steel
Geothermal hot spots in specific areas	Stainless steel (2) or silicon bronze or protected galvanized steel (3)	Galvanized steel (4)	Mild steel	Galvanized steel
Zones 2, 3 & 4	Galvanized steel (4)	Galvanized steel (4)	Mild steel	Galvanized steel

Amd 1 Dec '00

(1) For definitions of "sheltered", "closed" and "exposed" see table 4.1.

(2) Stainless steel nails shall have annular grooves to provide similar withdrawal resistance to hot-dipped galvanized nails.

(3) Protection of galvanized steel nails shall consist of putty and an exterior painting system consisting of a primer undercoat and 2 top coats of oil-based or acrylic paint.

(4) Where the cladding is a corrosive timber, such as western red cedar or redwood, use stainless steel(2), silicon bronze or aluminium nails.

(5) Galvanized nails shall be hot-dipped galvanized; galvanized screws shall be mechanically zinc plated in accordance with AS 3566.

(6) Irrespective of the above, nails and screws must be compatible with any fixing plate they are used with.

(7) Nails and screws into piles within 600 mm of the ground shall be stainless steel.

Amd 1 Dec '00

4.5 Brick veneer ties and *lintels*

Table 4.4 gives the protection required for brick veneer ties and *lintels* supporting brick veneer, to achieve a 50 year durability.

Amd 1 Dec '00

4.6 Reinforcing and fixings in stucco

This Standard only applies to stucco that complies with NZS 4251. Protection of *reinforcement* and fixings shall, in all locations throughout New Zealand, be as given in table 4.2.

C4.6

NZS 4251 requires a protective coating to be applied to stucco.

4.7 Underlay or *sheathing*

Underlay and *sheathing* shall be in accordance with table 11.1. These underlays and *sheathings* will be durable for at least 15 years and are therefore acceptable under all *cladding* materials covered by this Standard, with the exception of masonry veneer. Details of underlays and *sheathings* proposed for this use shall be submitted to the *Building Consent Authority* for approval. Sheathing used for bracing shall be durable for at least 50 years and is also subject to approval by the *Building Consent Authority*.

Amd 1 Dec '00

C4.7

Underlays and sheathings under masonry veneers are difficult to access and therefore are required by the NZBC to last 50 years.

Copyright Standards New Zealand

© The Crown in right of New Zealand, administered by the New Zealand Standards Executive. Access to this standard has been sponsored by the Ministry of Business, Innovation and Employment under copyright license LN001498. You are not permitted to reproduce or distribute any part of this standard without prior written permission from Standards New Zealand, on behalf of New Zealand Standards Executive, unless your actions are covered by Part 3 of the Copyright Act 1994.

Table 4.4 – Protection for brick ties and lintels supporting brick veneer using AS/NZS 2699 (see 4.5)

Location	Protection/material of ties	Protection/material of lintels
Sea spray zone (R4 exposure to AS/NZS 2699)	316 or 316L stainless steel	316 or 316L stainless steel, or mild steel with 600 g/m² galvanized coating plus duplex coating(1), or abrasive blast cleaned coated mild steel(1)
Geothermal hot spots	Specific engineering design	Specific engineering design
Elsewhere (R3 exposure to AS/NZS 2699)	430 g/m² galvanized coating or 304 stainless steel	Mild steel with 600 g/m² galvanized coating or 316 or 316L stainless steel, or 300 g/m² galvanized coating plus duplex coating(1), or abrasive blast cleaned coated mild steel(1)
(1) Refer to AS/NZS 2699.3 tables 2 and 3 for coating requirements.		

Amd 1 Dec '00

4.8 Concrete

4.8.1

Minimum concrete cover to steel *reinforcement* shall be:

(a) 75 mm when concrete is placed directly on or against the ground;

(b) 50 mm in all other situations where the concrete is placed in formwork provided the concrete specifications follow the provisions of clause 4.8.2;

(c) 30 mm from the top of a wall or floor slab which is in a closed area or 50 mm from the top of any exposed wall or floor slab.

Amd 1 Dec '00

4.8.2

Minimum specified concrete strength at 28 days shall be:

(a) 10 MPa for unreinforced concrete used in mass *foundations*;

(b) 17.5 MPa for unreinforced concrete applications, for reinforced concrete either not exposed to weather or exposed to the weather in Zone 2 and Zone 3 as shown in figure 4.1;

(c) 20 MPa for reinforced concrete exposed to weather, at least 500 m from mean high tide mark in Zone 1 as shown in figure 4.1;

(d) 25 MPa for reinforced concrete exposed to weather and within 500 m of the mean high tide mark;

(e) Specially selected from NZS 3101 table 5.3 where a direct wearing concrete floor is required;

(f) Geothermal hot spots shall be to specific engineering design.

Amd 1 Dec '00

4.8.3

Concrete masonry shall:

(a) Comply with the provisions of NZS 4210;

(b) Have minimum cover to steel reinforcement from an uncoated masonry external face and minimum grout strength of:

60 mm and 25 MPa for sea spray zone;
50 mm and 17.5 MPa for Zone 1;
45 mm and 17.5 MPa for Zones 2 and 3;
35 mm and 17.5 MPa for interior conditions.

Amd 1 Dec '00

C4.8

The provisions of this clause are based on NZS 3101 and provide for a life of not less than 50 years. More economic designs should result in some cases if the more detailed provisions of NZS 3101 are followed, but such designs are not within the scope of this Standard.

Some of the areas described will be outside the scope of this Standard because of wind exposure.

C4.8.3

Durability provisions will follow AS 3700. When a waterproof external coating is used such as 2 coats of suitable high build acrylic paint a cover of 35 mm using 17.5 MPa grout should be adequate. Note that AS 3700 covers are defined from the inside of a masonry face shell. An allowance of 30 mm has therefore been added to the AS 3700 values to account for shell thickness.

Amd 1 Dec '00

Copyright Standards New Zealand

© The Crown in right of New Zealand, administered by the New Zealand Standards Executive. Access to this standard has been sponsored by the Ministry of Business, Innovation, and Employment under copyright license LN001498. You are not permitted to reproduce or distribute any part of this standard without prior written permission from Standards New Zealand, on behalf of New Zealand Standards Executive, unless your actions are covered by Part 3 of the Copyright Act 1994.

4.9 Sealant usage and durability

4.9.1 *Sealants in joint designs*

The use of sealants is outside the scope of NZS 3604. Where they are proposed to be used then full details, including sealant specification, joint design and preparation, installation instructions and information on sealant durability, need to be forwarded to the *Building Consent Authority* for approval.

C4.9.1
Sealants cause many problems through incorrect sealant specification, joint design and preparation, and installation. BRANZ Bulletins 283 and 284 provide a guide to the joint design and the types of sealants to use.

4.10 Flashings

4.10.1 *General*

Galvanized steel flashings shall have a minimum mass of galvanizing of:

Amd 1 Dec '00

(a) Hidden flashings Z450 plus protective coating in accordance with 4.4.5

(b) Exposed flashings Z450

4.10.2 *Hidden flashings*

Amd 1 Dec '00

Flashings hidden behind masonry veneers, or in other similar places where it is difficult to inspect or replace the flashing, are required to last for not less than 50 years. Flashing materials shall be compatible with their surrounding materials. Hidden flashings shall be made from:

Amd 1 Dec '00

(a) Z450 galvanized steel plus a protective coating in accordance with 4.4.5(a) or (c);

(b) Type 304 or 316 stainless steel;

(c) Aluminium;

Amd 1 Dec '00

(d) Plastic/fibre reinforced plastic not less than 0.5 mm thick uncovered and UV stabilized to 50 years;

(e) Butyl rubber;

(f) Annealed lead having a mass not less than 10 kg/m^2.

C4.10.2
Table 4.5 is a guide to compatibility of materials but may exceed the requirements of the building code. For use with stucco, the Z450 galvanized steel should be epoxy powder coated prior to installation. Aluminium flashings are not recommended as their dependence on the integrity of any applied coating for resistance to alkali attack from the stucco is not reliable.

Amd 1 Dec '00

4.10.3 *Exposed flashings*

These are defined as flashings which can be inspected or replaced with moderate ease, requiring 15 year durability. Typical exposed flashings are roofing flashings, corner soakers, fascia/bargeboard flashings, window and door head and sill flashings. Flashing materials shall be compatible with their surrounding materials. Flashings which are exposed shall be made from:

Amd 1 Dec '00

(a) Z450 galvanized steel;

(b) Aluminium;

Amd 1 Dec '00

(c) Plastic/fibre reinforced plastic not less than 0.5 mm thick and UV stabilized to 50 years;

(d) Butyl rubber;

(e) Type 304 or 316 stainless steel;

(f) Copper;

(g) Uncovered annealed lead having a mass not less than 17 kg/m^2;

(h) Zinc.

C4.10.3
Table 4.5 is a guide to compatibility of materials but may exceed the requirements of the building code. In all cases, care should be taken to ensure that the flashing material also matches its durability requirements for the particular exposure environment as given in figure 4.1.

The information in table 4.5 is based on BRANZ Bulletin 304.

Amd 1 Dec '00

Copyright Standards New Zealand

Table 4.5 Material compatibility chart: What works with what (see 4.10.2 and 4.10.3) **(Informative)**

Amd 1 Dec '00

Material water flows over \ Material water flows onto	Aluminium, anodized	Aluminium, mill-finish	Aluminium, powder coated	Butyl rubber	CCA-treated timber	Cedar	Cement plaster	Ceramic tiles	Clay bricks	Concrete dry	Concrete green	Concrete tiles	Copper	Fibre-cement	Glass	Lead	Plastics	Stainless steel	Steel coil-coated	Steel, galvanized	Zinc	Zinc/aluminium coating
Aluminium, anodized	✓	✓	✓	✓	✓	✓	✓	✓	✓	✓	✓	✓	✓	✓	✓	✓	✓	✓	✓	X	X	X
Aluminium, mill-finish	✓	✓	✓	✓	✓	✓	✓	✓	✓	✓	✓	✓	✓	✓	✓	✓	✓	✓	✓	X	X	X
Aluminium, powder coated	✓	✓	✓	✓	✓	✓	✓	✓	✓	✓	✓	✓	✓	✓	✓	✓	✓	✓	✓	X	X	X
Butyl rubber	✓	✓	✓	✓	✓	✓	✓	✓	✓	✓	✓	✓	✓	✓	✓	✓	✓	✓	✓	X	X	X
CCA-treated timber	X	X	X	✓	✓	✓	✓	✓	✓	✓	✓	✓	✓	✓	✓	✓	✓	✓	X	X	X	X
Cedar (1)	✓	✓	✓	✓	✓	✓	✓	✓	✓	✓	✓	✓	✓	✓	✓	✓	✓	✓	✓	X	X	X
Cement plaster (uncoated)	X	X	X	✓	✓	✓	✓	✓	✓	✓	✓	✓	✓	✓	X	X	✓	✓	X	X	X	X
Ceramic tiles (2) **(cement grout)**	X	X	X	✓	✓	✓	✓	✓	✓	✓	✓	✓	✓	✓	X	✓	✓	✓	✓	X	X	X
Clay bricks (2) **(cement mortar)**	X	X	X	✓	✓	✓	✓	✓	✓	✓	✓	✓	✓	✓	X	✓	✓	✓	✓	X	X	X
Concrete dry (unpainted)	X	X	X	✓	✓	✓	✓	✓	✓	✓	✓	✓	✓	✓	X	✓	✓	✓	✓	X	X	X
Concrete green (unpainted)	X	X	X	✓	✓	✓	✓	✓	✓	✓	✓	✓	✓	✓	X	X	✓	✓	X	X	X	X
Concrete tiles	X	X	X	✓	✓	✓	✓	✓	✓	✓	✓	✓	✓	✓	X	✓	✓	✓	✓	X	X	X
Copper (3)	X	X	X	✓	✓	✓	✓	✓	✓	✓	✓	✓	✓	✓	✓	✓	✓	✓	X	X	X	X
Fibre-cement (unpainted)	X	X	X	✓	✓	✓	✓	✓	✓	✓	✓	✓	✓	✓	X	✓	✓	✓	✓	X	X	X
Glass	✓	✓	✓	✓	✓	✓	✓	✓	✓	✓	✓	✓	✓	✓	✓	✓	✓	✓	✓	X	X	X
Lead (3) (4) **(not lead edged)**	X	X	X	✓	✓	✓	✓	✓	✓	✓	✓	✓	X	✓	X	✓	✓	✓	X	X	X	X
Plastics	✓	✓	✓	✓	✓	✓	✓	✓	✓	✓	✓	✓	✓	✓	✓	✓	✓	✓	✓	X	X	X
Stainless steel	✓	✓	✓	✓	✓	✓	✓	✓	✓	✓	✓	✓	✓	✓	✓	✓	✓	✓	✓	X	X	X(5)
Steel coil-coated	✓	✓	✓	✓	✓	✓	✓	✓	✓	✓	✓	✓	✓	✓	✓	✓	✓	✓	✓	X	X	X
Steel, galvanized (unpainted)	✓	✓	✓	✓	✓	✓	✓	✓	✓	✓	✓	✓	✓	✓	✓	✓	✓	✓	✓	✓	✓	✓
Zinc (unpainted)	✓	✓	✓	✓	✓	✓	✓	✓	✓	✓	✓	✓	✓	✓	✓	✓	✓	✓	✓	✓	✓	✓
Zinc/aluminium coating (6)	✓	✓	✓	✓	✓	✓	✓	✓	✓	✓	✓	✓	✓	✓	✓	✓	✓	✓	✓	X	X	✓

LEGEND

✓ Materials satisfactory in contact or with water run-off as indicated.

X Contact between materials is not permitted. Water run-off is not permitted as indicated.

© The Crown in right of New Zealand, administered by the New Zealand Standards Executive. Access to this standard has been sponsored by the Ministry of Business, Innovation, and Employment under copyright license LN001498. You are not permitted to reproduce or distribute any part of this standard without prior written permission from Standards New Zealand, on behalf of New Zealand Standards Executive, unless your actions are covered by Part 3 of the Copyright Act 1994.

© The Crown in right of New Zealand, administered by the New Zealand Standards Executive. Access to this standard has been sponsored by the Ministry of Business, Innovation, and Employment under copyright license LN001498. You are not permitted to reproduce or distribute any part of this standard without prior written permission from Standards New Zealand, on behalf of New Zealand Standards Executive, unless your actions are covered by Part 3 of the Copyright Act 1994.

NOTE –

(1) Leachate from cedar (and redwood) may cause staining and, because of its acidic nature, attack galvanizing/zinc/aluminium coating.

(2) Cement-based mortar or grout causes the corrosion.

(3) Water run-off from these materials may cause staining on most materials.

(4) Lead should be primed if being used with coil-coated materials to prevent staining, (manufacturer's recommendation).

(5) Except for some fasteners in other than in a sea spray zone or a geothermal hot spot (manufacturer's recommendation).

(6) Zinc/aluminium alloy coating shall not be used in contact with Portland cement concrete or unprotected lead.

Copyright Standards New Zealand

NOTES

© The Crown in right of New Zealand, administered by the New Zealand Standards Executive. Access to this standard has been sponsored by the Ministry of Business, Innovation, and Employment under copyright license LN001498. You are not permitted to reproduce or distribute any part of this standard without prior written permission from Standards New Zealand, on behalf of New Zealand Standards Executive, unless your actions are covered by Part 3 of the Copyright Act 1994.

Copyright Standards New Zealand

© The Crown in right of New Zealand, administered by the New Zealand Standards Executive. Access to this standard has been sponsored by the Ministry of Business, Innovation, and Employment under copyright license LN001498. You are not permitted to reproduce or distribute any part of this standard without prior written permission from Standards New Zealand, on behalf of New Zealand Standards Executive, unless your actions are covered by Part 3 of the Copyright Act 1994.

SECTION 5
BRACING DESIGN

5.1 General **5**-3

5.2 Wind bracing demand **5**-3

5.3 Earthquake bracing demand **5**-6

5.4 Subfloor bracing design **5**-16

5.5 Wall bracing design **5**-18

5.6 Diaphragms **5**-20

Table

5.1 Determination of building wind zone **5**-4

5.2 Procedure for determination of wind zones **5**-4

5.3 Determination of topographic class, T1 – T5 ..... **5**-7

5.4 Topographic class **5**-7

5.5 Bracing demand for wind – Foundation structures **5**-8

5.6 Bracing demand for wind – Walls above subfloor structure for single storey or upper storey **5**-9

5.7 Bracing demand for wind – Walls above subfloor structure for lower of 2 storeys **5**-10

5.8 Bracing demand for earthquake for various combinations of claddings for single storey buildings on subfloor framing and/or foundation walls **5**-13

5.9 Bracing demand for earthquake for various combinations of claddings for 2 storey buildings on subfloor framing and/or foundation walls **5**-14

5.10 Bracing demand for earthquake for various combinations of claddings for 1 and 2 storey buildings on concrete slab-on-ground **5**-15

5.11 Bracing capacity ratings of subfloor bracing elements **5**-17

Figure

5.1 Wind regions and lee zones **5**-5

5.2 Topographic zone **5**-7

5.3 Direction of wind and braced walls **5**-9

5.4 Earthquake zones **5**-12

5.5 Distribution of bracing lines **5**-19

Copyright Standards New Zealand

© The Crown in right of New Zealand, administered by the New Zealand Standards Executive. Access to this standard has been sponsored by the Ministry of Business, Innovation, and Employment under copyright license LN001498. You are not permitted to reproduce or distribute any part of this standard without prior written permission from Standards New Zealand, on behalf of New Zealand Standards Executive, unless your actions are covered by Part 3 of the Copyright Act 1994.

Copyright Standards New Zealand

© The Crown in right of New Zealand, administered by the New Zealand Standards Executive. Access to this standard has been sponsored by the Ministry of Business, Innovation, and Employment under copyright license LN001498. You are not permitted to reproduce or distribute any part of this standard without prior written permission from Standards New Zealand, on behalf of New Zealand Standards Executive, unless your actions are covered by Part 3 of the Copyright Act 1994.

5 BRACING DESIGN

5.1 General

5.1.1

Wind and earthquake forces exert horizontal forces on buildings. *Bracing* design involves the determination of both the extent of these forces, called the *bracing demand*, and also the determination of the *capacity* of the building and its elements to resist these forces, called *bracing capacity*. *Foundation* systems and wall *bracing* shall be designed and built to provide *bracing capacity* that exceeds the *bracing demand*. *Dragon ties* and *diaphragms* may be provided to connect walls as required. This section sets out the methodology for design of *bracing* systems. *Bracing* of walls is also described in 8.3. *Bracing* of roofs is covered in section 10.

5.1.2 *Bracing demand – Determination of horizontal forces*

The horizontal wind and earthquake forces are measured in "*Bracing Units*", BUs. They shall be determined as set out in 5.2 (wind) and 5.3 (earthquake) below.

5.1.3 *Bracing capacity – Design of bracing to resist horizontal forces*

The provision of *bracing capacity* to resist the horizontal *bracing demand* forces, is also expressed in BUs and shall be determined from 5.4 and 5.5.

5.1.4 *Bracing design objective*

Bracing capacity provided by the *bracing* systems designed to 5.4 and 5.5 shall be greater than the *bracing demand* determined from 5.2 and 5.3.

5.1.5 *Wings, blocks and discontinuous floor levels*

When any building consists of *wings* or *blocks* which extend more than 6 m from the remainder of the building, then each such *wing* or *block* shall be required to provide sufficient *bracing* individually. When any building has discontinuous floor levels, there shall be an internal *bracing* line in the *storey* below (or subfloor), at the location of the discontinuity.

Amd 1 Dec '00

5.2 Wind bracing demand

The wind *bracing demand* on the structure shall be assessed on the basis of the building location, the building size and shape, and the level within the building being considered. Refer to 5.2.1, 5.2.5 and 5.2.6 and tables 5.2 to 5.7 inclusive.

5.2.1 *Wind zone*

The wind zone shall be determined from table 5.1 by following the procedure outlined in table 5.2.

5.2.2 *Wind regions*

Wind regions shall be as indicated in figure 5.1.

C5.1.2

One kilonewton equals 20 BUs. One bracing unit is approximately equal to 5 kilogram force. BUs are determined per metre of wall length for wind and per square metre of floor area for earthquake. Individual elements of a building's structure such as a pile have their capacity recorded in BUs.

C5.2

Land formations in New Zealand modify the ocean winds flowing over the country. Wind speed (and resulting pressure) increases as the wind passes over and between hills, or through valleys. Wind speed is reduced when passing over rough ground (drag effect). The particular shapes of the hills and valleys (topography) and the extent of shelter in the upwind direction (site exposure) also influence the wind speed at the building site.

C5.2.2

The wind regions are based on wind speed data supplied by the New Zealand Meteorological Service and included in NZS 4203. It is based on wind speeds which have a 5 % probability of being exceeded in 50 years. Figure 5.1 has been prepared for buildings with an eaves height of 8 m above adjacent ground, by considering the modified wind speed as outlined in NZS 4203. Open ground, rural and urban roughness definitions in this Standard correspond respectively to terrain categories 2, intermediate between 2 and 3, and category 3 of NZS 4203:Part 5.

Copyright Standards New Zealand

© The Crown in right of New Zealand, administered by the New Zealand Standards Executive. Access to this standard has been sponsored by the Ministry of Business, Innovation, and Employment under copyright license LN001498. You are not permitted to reproduce or distribute any part of this standard without prior written permission from Standards New Zealand, on behalf of New Zealand Standards Executive, unless your actions are covered by Part 3 of the Copyright Act 1994.

Table 5.1 – Determination of building wind zone (see 5.2.1)

Region	Rough-ness	Topographic Class							
		T 1		T 2		T 3		T 4	T 5
		Sheltered	Exposed	Sheltered	Exposed	Sheltered	Exposed	Exposed	Exposed
R1	Urban	L	L	L	M	M	H	VH	VH
	Rural	M	H	H	VH	H	VH	SED	SED
	Open	M	H	H	VH	VH	SED	SED	SED
R2	Urban	L	M	M	H	H	H	VH	SED
	Rural	M	H	H	VH	VH	SED	SED	SED
	Open	H	VH	VH	SED	SED	SED	SED	SED

Amd 1 Dec '00

NOTE –
Wind speeds below are maximum ultimate limit state speeds for each wind zone.

L = Low wind speed of 32 m/s M = Medium wind speed of 37 m/s

H = High wind speed of 44 m/s VH = Very High wind speed of 50 m/s

SED = Specific Engineering Design (not covered by this Standard)

Table 5.2 – Procedure for determination of wind zones (see 5.2.1)

Steps	Action	Reference	Values available
1	Determine wind region	Figure 5.1	R1 or R2
2	Determine if in a lee zone	Figure 5.1	Yes, no (refer to table 5.4)
3	Determine ground roughness	Clause 5.2.3	Urban, rural, open
4	Determine site exposure	Clause 5.2.4	Sheltered, exposed
5	Determine topographic class	Clause 5.2.5, figure 5.2, tables 5.3 and 5.4	T1, T2, T3, T4, T5
6	Determine building wind zone	Table 5.1	L, M, H, VH, SED

C5.2.3

The ground roughness classification indicates the drag effect of different terrains on the wind as it passes over.

Urban terrain is typical of most New Zealand residential subdivisions.

Rural terrain is typical New Zealand farmland.

At least 500 m of rougher ground is required to affect the wind profile.

Ground roughness should be based upon the likely terrain in 5 years from the date of calculations.

5.2.3 *Ground roughness*

The ground roughness of the site shall be determined by considering the number and height of obstructions over which the wind must pass as it approaches the site, using the following definitions:

Urban terrain: more than 10 obstructions (houses or trees) per hectare.

Rural terrain: country areas with some trees and shelter belts, cropping and horticulture (includes tussock land).

Open terrain: grazed pasture or areas adjacent to beaches and the sea, or airfields and other areas with only isolated trees or shelter.

Sites within a 500 m wide fringe of the boundary between ground roughness zones, shall be considered to be in the less rough ground roughness zone.

Copyright Standards New Zealand

© The Crown in right of New Zealand, administered by the New Zealand Standards Executive. Access to this standard has been sponsored by the Ministry of Business, Innovation, and Employment under copyright license LN001498. You are not permitted to reproduce or distribute any part of this standard without prior written permission from Standards New Zealand, on behalf of New Zealand Standards Executive, unless your actions are covered by Part 3 of the Copyright Act 1994.

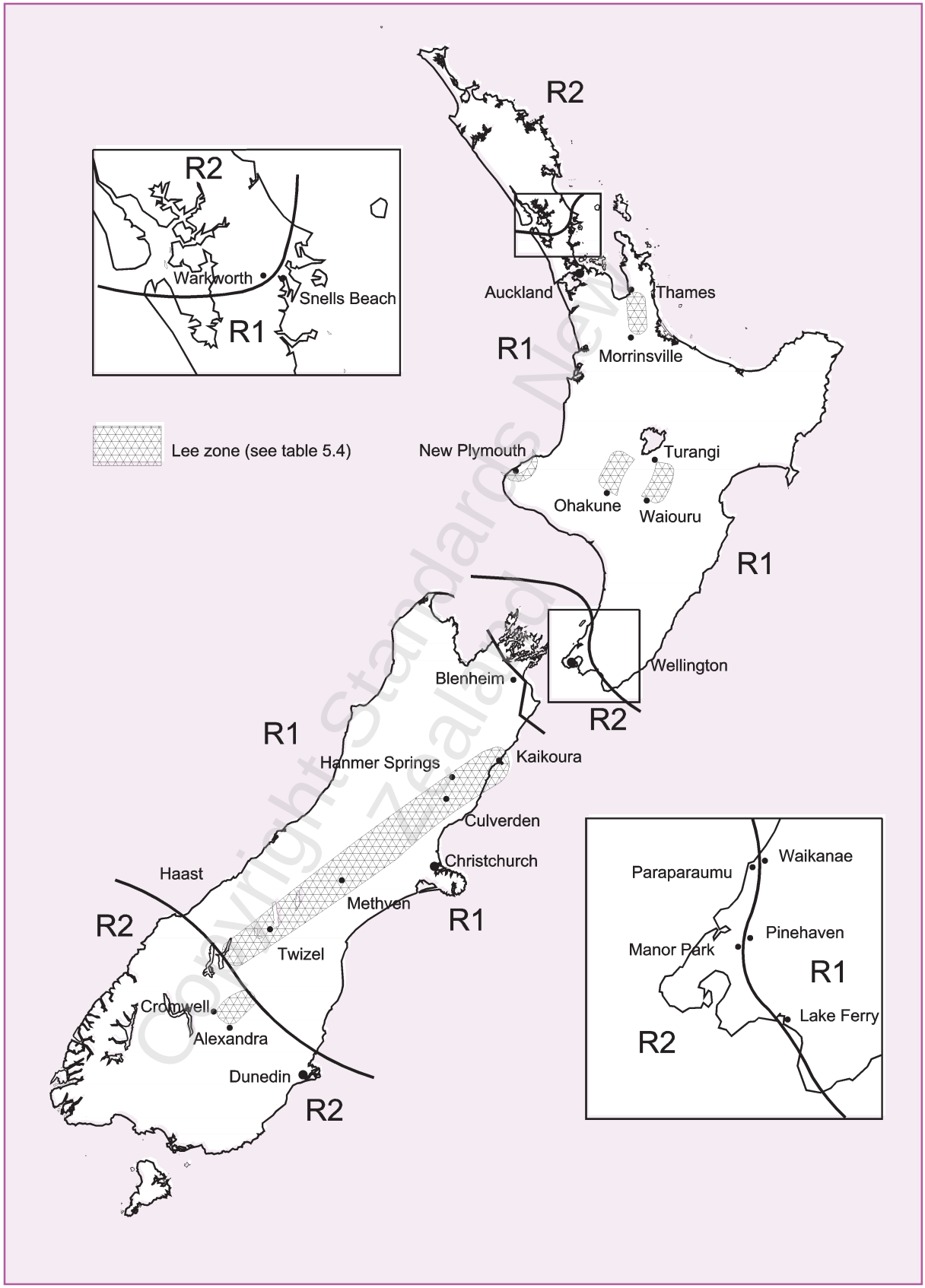

Figure 5.1 – Wind regions and lee zones (see 5.2.2)

© The Crown in right of New Zealand, administered by the New Zealand Standards Executive. Access to this standard has been sponsored by the Ministry of Business, Innovation, and Employment under copyright license LN001498. You are not permitted to reproduce or distribute any part of this standard without prior written permission from Standards New Zealand, on behalf of New Zealand Standards Executive, unless your actions are covered by Part 3 of the Copyright Act 1994.

5.2.4 *Site exposure*

Site exposure for a building shall be determined by assessing the shielding effects of obstructions to wind flow around the site using the following definitions, and assuming that the wind can come from any direction.

Sheltered.... At least 2 rows of similarly sized, permanent obstructions at the same ground level all around.

Exposed..... Moderate or steep hillside sites; or
adjacent to playing fields or other open spaces, beach fronts, large rivers, motorways; or
adjacent to wind channels greater than 100 m in width.

C5.2.4

Typical New Zealand suburban developments on flat or gently undulating ground, are usually "sheltered". The wind speeds in NZS 4203 have been modified for this Standard in urban terrain to reflect the shielding effect. Factors of 0.8 and 0.9 for urban terrain have been applied to such "sheltered" sites and "exposed" sites respectively, and 0.9 and 1.0 for both rural and open terrain.

5.2.5 *Topographic class*

The steps in table 5.3 and table 5.4 are to be used to determine the topographic class of the site. The "smoothed gradient" shall be measured over an upwind horizontal distance from the crest of 3 times the height of the hill, H. It is the ratio of the change of elevation, Δ divided by that distance, 3H. See figure 5.2.

C5.2.5

Wind accelerates as it flows over hills, through channels and over mountains. The type of landform (escarpment or hill/ridge) and the character of the formation (steep, moderate, or gentle which is described by the "smoothed gradient") also affect flow.

5.2.6 *Building size and shape*

The influence on the wind *bracing demand* of the building size and shape and location of *bracing elements* within the building height is incorporated in tables 5.5 to 5.7.

5.2.7 *Determination of wind bracing demand*

The overall wind *bracing demand* on the building shall be determined by multiplying the value obtained from tables 5.5 to 5.7 by the building (or roof) length, where length is measured perpendicular to the direction of the wind. The building length dimension shall be used where the roof pitch is 25° or less, and the roof length dimension where the roof pitch is greater than 25°.

C5.2.7

For roof pitches below 25° the horizontal loads on the roof are small compared with the loads on the walls. For this reason the gable overhang and eaves are ignored for calculation purposes.

For steeper roofs the horizontal loads on the roof are significant and the overall roof length (including overhangs) is used for calculations.

5.2.8 *Wind bracing demand for decks*

Wind *bracing demand* for *decks* may be ignored.

5.3 Earthquake bracing demand

5.3.1

The earthquake *bracing demand* on the building structure shall be assessed on the basis of the building location (earthquake zone) the level of the building under consideration, the building size, and the roofing and *cladding* weights.

This section enables the *bracing demand* to be determined for buildings of *floor loads* of 2 kPa or less. Refer to section 14 for 3 kPa *floor loads*.

5.3.2 *Earthquake zone*

The earthquake zone shall be determined from figure 5.4.

Copyright Standards New Zealand

© The Crown in right of New Zealand, administered by the New Zealand Standards Executive. Access to this standard has been sponsored by the Ministry of Business, Innovation, and Employment under copyright license LN001498. You are not permitted to reproduce or distribute any part of this standard without prior written permission from Standards New Zealand, on behalf of New Zealand Standards Executive, unless your actions are covered by Part 3 of the Copyright Act 1994.

Table 5.3 – Determination of topographic class, T1 – T5 (see 5.2.5)

Steps	Action	Reference	Values available
1	Determine formation and hill height, H	Figure 5.2	Escarpment, hill or ridge
2	Determine topographic zone	Figure 5.2	Crest zone, outer zone
3	Determine smoothed gradient value	Figure 5.2 Gradient = Δ/3H	< 1:5 1:5 to 1:3 > 1:3
4	Determine smoothed gradient class	This table & table 5.4	Gentle moderate steep
5	Determine site exposure	Clause 5.2.4	Sheltered, exposed
6	Determine topographic class	Clause 5.2.5, table 5.4	T1, T2, T3, T4, T5

Table 5.4 – Topographic class (see 5.2.5 and figure 5.2)

Topographic zone	Escarpment			Hill, ridge or spur		
	Gentle	Moderate	Steep	Gentle	Moderate	Steep
Crest zone	T2	T2	T3	T2	T4	T5
Outer zone	T1	T1	T2	T1	T3	T3

In this table: Gentle = Gradient of 1: 10 to 1: 5
Moderate = Gradient of > 1: 5 to 1: 3
Steep = Gradient of > 1: 3

All sites outside the topographic zone are topographic class T1 except that:

(a) Sites within the lee zones in figure 5.1, which would otherwise be T1, are classed as T3 to account for the effects of high altitude wind disturbances, created by wind flow, over the adjacent mountain ranges.

(b) Sites within valleys which are known to have accelerated wind flows within them because of their shape and exposed mouth are classed as T3.

(c) Undulations of less than 25 m in height and gradients less than 1:10 may be ignored so that they are classed as T1.

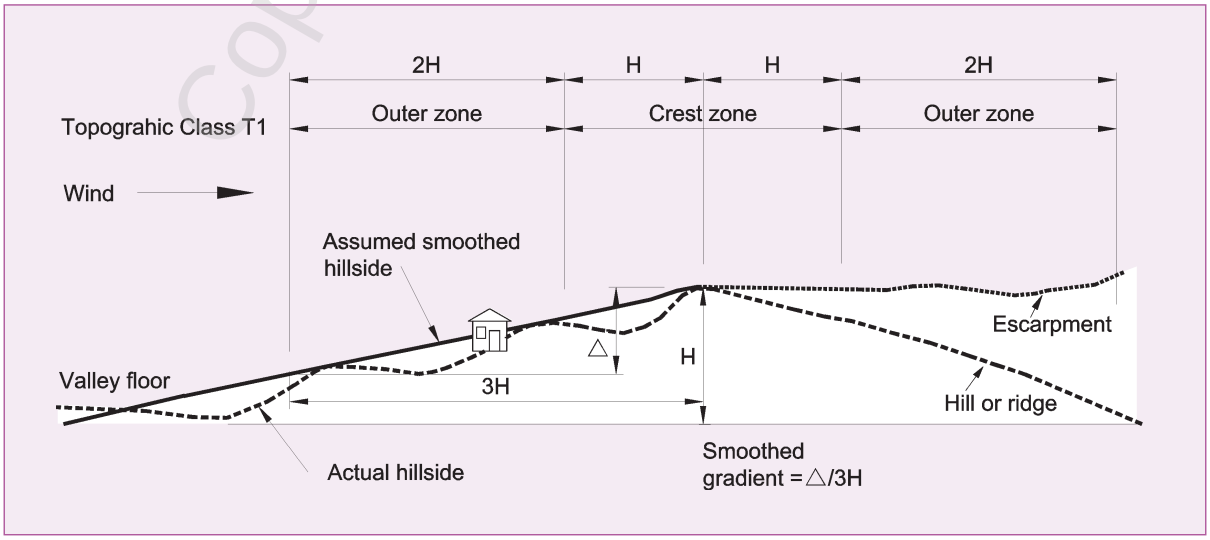

Figure 5.2 – Topographic zone (see table 5.4)

Amd 1 Dec '00

© The Crown in right of New Zealand, administered by the New Zealand Standards Executive. Access to this standard has been sponsored by the Ministry of Business, Innovation, and Employment under copyright license LN001498. You are not permitted to reproduce or distribute any part of this standard without prior written permission from Standards New Zealand, on behalf of New Zealand Standards Executive, unless your actions are covered by Part 3 of the Copyright Act 1994.

Table 5.5 – Bracing demand for wind – Foundation structures (see 5.2.7 and figure 5.3)

Height to apex, H	Roof height, h	Building wind zone							
		Low		Medium		High		Very high	
		Direction of wind and braced walls							
		Across ridge	Along ridge	Across ridge	Along ridge	Across ridge	Along ridge	Across ridge	Along ridge
		Bracing demand (BUs/m) of building or roof length, L, perpendicular to wind direction							
(m)	(m)								
4	1	38	45	50	61	73	86	93	111
5	1	53	60	70	81	102	114	130	147
	2	48	53	63	71	92	100	117	129
6	1	68	75	90	101	131	143	167	184
	2	63	68	83	91	121	128	154	166
	3	60	60	80	81	116	114	148	147
7	1	83	91	110	121	160	171	204	221
	2	78	83	103	111	150	157	191	203
	3	75	75	100	101	145	143	185	184
	4	80	68	107	91	155	128	197	166
8	1	98	106	130	141	189	200	241	258
	2	93	98	123	131	179	185	228	239
	3	90	91	120	121	174	171	222	221
	4	95	83	127	111	184	157	234	203
	5	113	75	150	101	218	143	278	184
9	1	113	121	150	161	218	228	278	295
	2	108	113	143	151	208	214	265	276
	3	105	106	140	141	203	200	259	258
	4	110	98	147	131	213	185	271	239
	5	128	91	170	121	247	171	315	221
	6	128	83	170	111	247	157	315	203
10	1	128	136	170	182	247	257	315	332
	2	123	128	163	171	237	242	302	313
	3	120	121	160	161	232	228	296	295
	4	125	113	167	151	242	214	308	276
	5	143	106	190	141	276	200	352	258
	6	143	98	190	131	276	185	352	239
	7	143	91	190	121	276	171	352	221

Copyright Standards New Zealand

© The Crown in right of New Zealand, administered by the New Zealand Standards Executive. Access to this standard has been sponsored by the Ministry of Business, Innovation, and Employment under copyright license LN001498. You are not permitted to reproduce or distribute any part of this standard without prior written permission from Standards New Zealand, on behalf of New Zealand Standards Executive, unless your actions are covered by Part 3 of the Copyright Act 1994.

Table 5.6 – Bracing demand for wind – Walls above subfloor structure for single storey or upper storey (see 5.2.7 and figure 5.3)

Height to apex, H	Roof height, h	Stud height	Building wind zone							
			Low		Medium		High		Very high	
			Direction of wind and braced walls							
			Across ridge	Along ridge	Across ridge	Along ridge	Across ridge	Along ridge	Across ridge	Along ridge
			Bracing demand (BUs/m) of building or roof length, L, perpendicular to wind direction							
	(m)	(m)								
All heights	1	2.4	18	26	24	34	35	49	44	63
	2		28	33	37	44	54	64	69	81
	3		41	41	54	54	78	78	100	100
	4		60	48	81	64	117	93	149	118
	5		93	56	124	74	180	107	229	137
	6		108	63	144	84	209	122	266	155
	7		123	71	164	94	238	136	303	174
	8		138	78	184	104	267	151	340	192
All heights	1	3.0	23	30	30	40	44	58	56	74
	2		33	38	43	50	63	73	80	93
	3		45	45	60	60	87	87	111	111
	4		65	53	87	70	121	102	160	130
	5		98	60	130	80	189	116	241	148
	6		113	68	150	90	218	131	278	167
	7		128	75	170	100	248	145	315	185
	8		143	83	190	110	276	160	352	204

NOTE – For roofs with hip ends the "Across ridge" values shall be used for both directions.

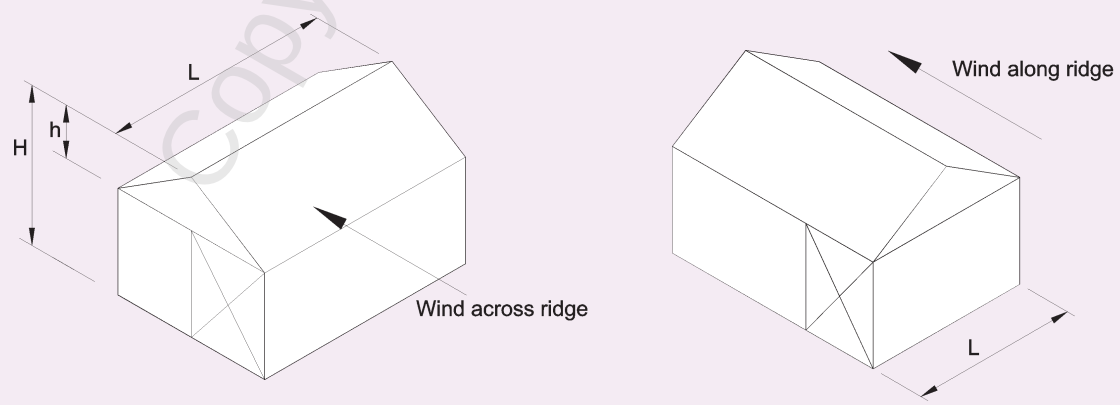

(A) ACROSS RIDGE
(Shall also be used for hip roofs)

(B) ALONG RIDGE

NOTE-
Braced walls are parallel to the wind direction and L is at right angles to the wind direction.

Figure 5.3 – Direction of wind and braced walls

Copyright Standards New Zealand

Table 5.7 – Bracing demand for wind – Walls above subfloor structure for lower of 2 storeys (see 5.2.7 and figure 5.3)

Height to apex H	Roof height, h	Stud height	Building wind zone							
			Low		Medium		High		Very high	
			Direction of wind and braced walls							
			Across ridge	Along ridge	Across ridge	Along ridge	Across ridge	Along ridge	Across ridge	Along ridge
			Bracing demand (BUs/m) of building or roof length, L, perpendicular to wind direction							
(m)	(m)	(m)								
6	1	Up to 3.0	57	65	76	86	110	125	141	159
	2		52	57	69	76	101	110	128	141
	3		50	50	66	66	96	96	122	122
	4		55	42	73	56	105	81	134	104
7	1	Up to 3.0	72	80	96	106	139	154	178	196
	2		67	72	89	96	130	139	165	178
	3		65	65	86	86	125	125	159	159
	4		69	57	93	76	134	110	171	141
	5		87	50	116	66	168	96	215	122
8	1	Up to 3.0	87	95	116	126	168	183	215	233
	2		82	87	109	116	159	168	202	215
	3		80	80	106	106	154	154	196	196
	4		84	72	113	96	163	139	208	178
	5		102	65	136	86	197	125	252	159
	6		102	57	136	76	197	110	252	141
9	1	Up to 3.0	102	110	136	146	197	212	252	270
	2		97	102	129	136	188	197	239	252
	3		95	95	126	126	183	183	233	233
	4		99	87	133	116	192	168	245	215
	5		117	80	156	106	226	154	289	196
	6		117	72	156	96	226	139	289	178
	7		117	65	156	86	226	125	289	159
10	1	Up to 3.0	117	125	156	166	226	241	289	307
	2		112	117	149	156	217	226	276	289
	3		110	110	146	146	212	212	270	270
	4		115	102	153	136	221	197	282	252
	5		132	95	176	126	255	183	326	233
	6		132	87	176	116	255	168	326	215
	7		132	80	176	106	255	154	326	196
	8		132	72	176	96	255	139	326	178

Copyright Standards New Zealand

© The Crown in right of New Zealand, administered by the New Zealand Standards Executive. Access to this standard has been sponsored by the Ministry of Business, Innovation, and Employment under copyright license LN001498. You are not permitted to reproduce or distribute any part of this standard without prior written permission from Standards New Zealand, on behalf of New Zealand Standards Executive, unless your actions are covered by Part 3 of the Copyright Act 1994.

© The Crown in right of New Zealand, administered by the New Zealand Standards Executive. Access to this standard has been sponsored by the Ministry of Business, Innovation, and Employment under copyright license LN001498. You are not permitted to reproduce or distribute any part of this standard without prior written permission from Standards New Zealand, on behalf of New Zealand Standards Executive, unless your actions are covered by Part 3 of the Copyright Act 1994.

5.3.3 *Determination of earthquake bracing demand measured in BUs*

The overall earthquake *bracing demand* on the *bracing elements,* in both the length and width directions of the building, at all of its levels, shall be determined by multiplying the values in tables 5.8 to 5.10 by the gross floor area in square metres, at the level of the building being considered as follows.

5.3.3.1 *Buildings with timber framed storeys*

For all buildings with only timber framed *storeys* use tables 5.8 to 5.10, except that where there is a *part storey* in a roof space 5.3.3.3 applies and where there is a *part storey* basement 5.3.3.4 applies.

5.3.3.2 *Buildings with a concrete masonry lower storey*

Where a building has a concrete masonry lower *storey*, for the *bracing demand* for the timber framed upper *storey*, regard it as a single *storey* building and use table 5.8 with a heavy subfloor *cladding*.

5.3.3.3 *Part storey in a roof space*

Where a *part storey* is contained in a roof space the *bracing demand* values in tables 5.8 and 5.10 shall be increased by 3 BUs/m^2.

5.3.3.4 *Part storey basement*

Amd 1 Dec '00

Where a part *storey* is contained in a timber framed basement, then, for the purpose of calculating the *bracing demand*, the building shall be regarded as being 2 buildings, one of 2 *storeys* and the other of 1 storey. The demand for each "building" shall be determined as given in 5.3.3.1 and 5.3.3.2 as appropriate.

5.3.4 *Masonry and concrete chimneys*

The *bracing demand* shall be increased where a masonry or concrete chimney is reliant on the building structure for lateral support. *NZBC* B1/AS3 "Small chimneys" in Approved Document B1 gives the procedure for determining the additional *bracing demand* in *bracing units* for certain masonry and concrete chimneys.

C5.3.3

Tables 5.8 to 5.10 set out combinations of wall cladding and roof weights which are defined in 1.3.

Copyright Standards New Zealand

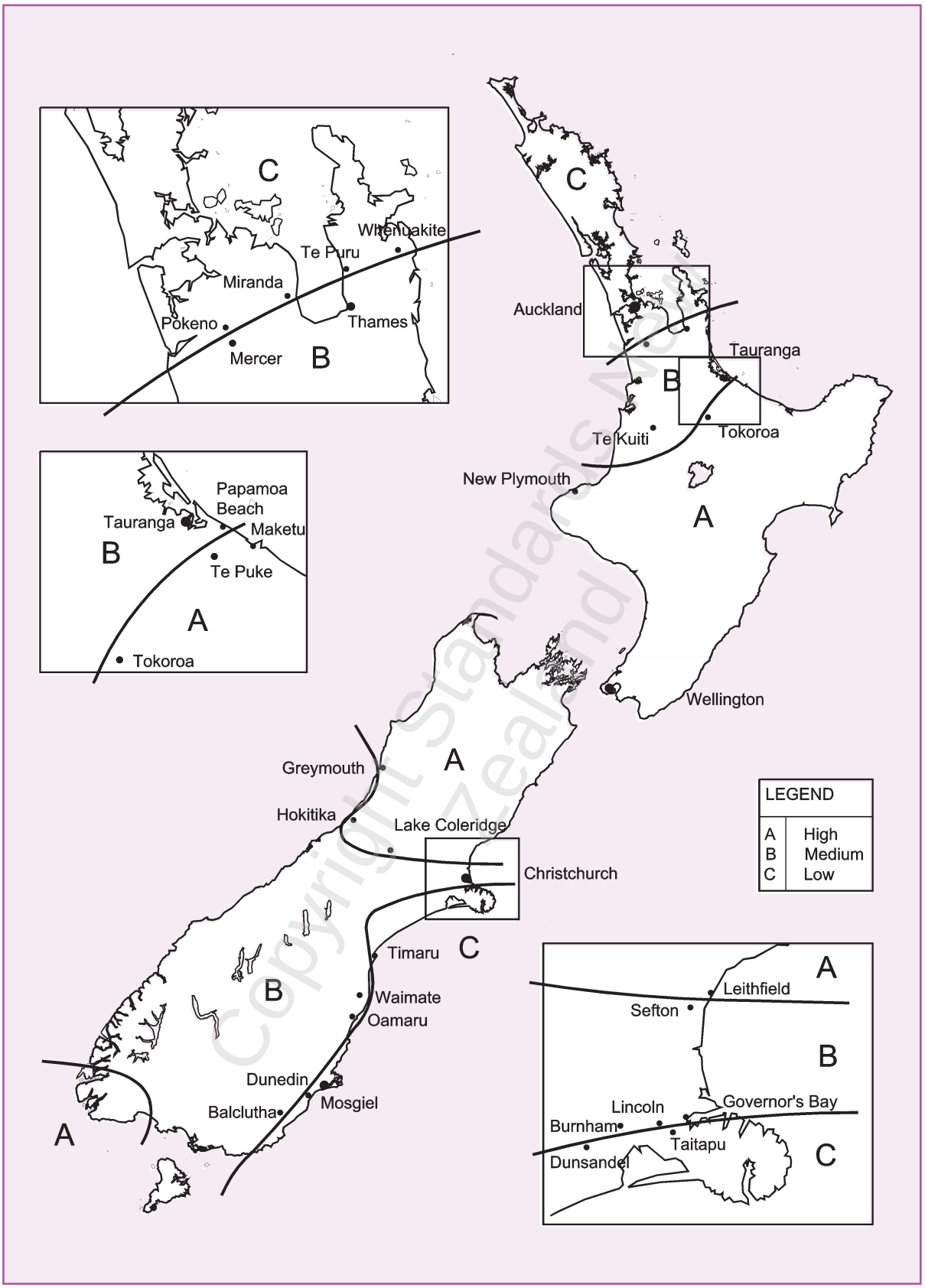

Figure 5.4 – Earthquake zones (see 5.3.2)

© The Crown in right of New Zealand, administered by the New Zealand Standards Executive. Access to this standard has been sponsored by the Ministry of Business, Innovation, and Employment under copyright license LN001498. You are not permitted to reproduce or distribute any part of this standard without prior written permission from Standards New Zealand, on behalf of New Zealand Standards Executive, unless your actions are covered by Part 3 of the Copyright Act 1994.

© The Crown in right of New Zealand, administered by the New Zealand Standards Executive. Access to this standard has been sponsored by the Ministry of Business, Innovation, and Employment under copyright license LN001498. You are not permitted to reproduce or distribute any part of this standard without prior written permission from Standards New Zealand, on behalf of New Zealand Standards Executive, unless your actions are covered by Part 3 of the Copyright Act 1994.

Table 5.8 – Bracing demand for earthquake for various combinations of claddings for single storey buildings on subfloor framing and/or foundation walls (see 5.3.3)

2 kPa floor loads

Subfloor cladding	Single storey cladding	Roof cladding	Roof pitch degrees	Subfloor structure			Single storey walls		
				Earthquake zone					
				A	B	C	A	B	C
				Bracing demand in BUs/m² of floor area					
Light	Light	Light	0 - 25	9.4	7.1	4.7	6.7	5.0	3.3
			26 - 45	9.8	7.4	4.9	7.1	5.3	3.6
			46 - 60	10.5	7.9	5.3	8.0	6.0	4.0
Medium	Light	Light	0 - 25	9.9	7.4	5.0	6.8	5.1	3.4
			26 - 45	10.3	7.7	5.1	7.3	5.5	3.7
			46 - 60	11.0	8.3	5.5	8.2	6.1	4.1
Heavy	Light	Light	0 - 25	11.2	8.4	5.6	7.3	5.5	3.7
			26 - 45	11.6	8.7	5.8	7.8	5.9	3.9
			46 - 60	12.3	9.2	6.2	8.7	6.5	4.3
Light	Light	Heavy	0 - 25	12.1	9.1	6.1	9.8	7.3	4.9
			26 - 45	13.3	10.0	6.6	11.0	8.3	5.5
			46 - 60	15.4	11.6	7.7	13.3	10.0	6.6
Medium	Light	Heavy	0 - 25	12.6	9.5	6.3	10.0	7.5	5.0
			26 - 45	13.8	10.3	6.9	11.3	8.4	5.6
			46 - 60	15.9	11.9	8.0	13.6	10.2	6.8
Heavy	Light	Heavy	0 -25	13.9	10.5	7.0	10.6	7.9	5.3
			26 - 45	15.1	11.3	7.5	11.9	8.9	5.9
			46 - 60	17.2	12.9	8.6	14.2	10.7	7.1
Medium and Heavy	Medium	Heavy	0 - 25	14.3	10.7	7.2	11.2	8.4	5.6
			26 - 45	15.5	11.6	7.7	12.4	9.3	6.2
			46 - 60	17.6	13.2	8.8	14.8	11.1	7.4
Medium	Medium	Light	0 - 25	11.6	8.7	5.8	8.0	6.0	4.0
			26 - 45	12.0	9.0	6.0	8.4	6.3	4.2
			46 - 60	12.7	9.5	6.4	9.3	7.0	4.7
Heavy	Medium	Light	0 - 25	12.9	9.7	6.5	8.4	6.3	4.2
			26 - 45	13.3	10.0	6.7	8.9	6.7	4.5
			46 - 60	14.0	10.5	7.0	9.8	7.4	4.9
Heavy	Heavy	Light	0 - 25	17.7	13.3	8.9	11.6	8.7	5.8
			26 - 45	18.1	13.6	9.0	12.1	9.0	6.0
			46 - 60	18.8	14.1	9.4	13.0	9.7	6.5
Heavy	Heavy	Heavy	0 - 25	20.4	15.3	10.2	14.9	11.2	7.5
			26 - 45	21.5	16.2	10.8	16.3	12.2	8.1
			46 - 60	23.7	17.8	11.8	18.7	14.0	9.4

NOTE – See 5.3.3.3 regarding additional part storeys in the roof space.

Copyright Standards New Zealand

© The Crown in right of New Zealand, administered by the New Zealand Standards Executive. Access to this standard has been sponsored by the Ministry of Business, Innovation, and Employment under copyright license LN001498. You are not permitted to reproduce or distribute any part of this standard without prior written permission from Standards New Zealand, on behalf of New Zealand Standards Executive, unless your actions are covered by Part 3 of the Copyright Act 1994.

Table 5.9 – Bracing demand for earthquake for various combinations of claddings for 2 storey buildings on subfloor framing and/or foundation walls (see 5.3.3)

2 kPa floor loads

Lower storey cladding	Top storey cladding	Roof cladding	Roof pitch degrees	Subfloor structure			Lower storey walls			Top storey walls		
				Earthquake zones								
				A	B	C	A	B	C	A	B	C
				Bracing demand in BUs/m² of floor area								
Light	Light	Light	0 - 25	15.0	11.3	7.5	13.4	10.0	6.7	7.1	5.3	3.5
			26 - 45	15.4	11.6	7.7	13.8	10.3	6.9	7.6	5.7	3.8
			46 - 60	16.1	12.1	8.1	14.6	10.9	7.3	8.5	6.4	4.3
Medium	Light	Light	0 - 25	17.0	12.7	8.5	15.1	11.3	7.5	7.3	5.5	3.7
			26 - 45	17.4	13.0	8.7	15.5	11.6	7.7	7.9	5.9	3.9
			46 - 60	18.1	13.6	9.0	16.2	12.2	8.1	8.9	6.6	4.4
Heavy	Light	Light	0 - 25	22.4	16.8	11.2	19.8	14.8	9.9	8.3	6.0	4.0
			26 - 45	22.8	17.1	11.4	20.0	15.2	10.1	8.6	6.4	4.3
			46 - 60	23.5	17.6	11.8	21.0	15.7	10.5	9.6	7.2	4.8
Light	Light	Heavy	0 - 25	17.7	13.3	8.9	16.2	12.2	8.1	10.6	7.9	5.3
			26 - 45	18.9	14.2	9.4	17.4	13.1	8.7	12.0	9.0	6.0
			46 - 60	21.0	15.8	10.5	19.7	14.7	9.8	14.5	10.8	7.2
Medium	Light	Heavy	0 - 25	19.7	14.8	9.8	17.9	13.5	9.0	11.0	8.2	5.5
			26- 45	20.8	15.6	10.4	19.1	14.4	9.6	12.4	9.3	6.2
			46 - 60	23.0	17.2	11.5	21.4	16.0	10.7	15.0	11.2	7.5
Heavy	Light	Heavy	0 - 25	25.1	18.8	12.6	22.7	17.0	11.4	11.9	8.9	5.9
			26 - 45	26.3	19.7	13.1	23.9	17.9	12.0	13.4	10.1	6.7
			46 - 60	28.4	21.3	14.2	26.2	19.6	13.1	16.2	12.1	8.1
Medium and Heavy	Medium	Heavy	0 - 25	22.0	16.5	11.0	20.1	15.1	10.0	12.0	9.0	6.0
			26 - 45	23.2	17.4	11.6	21.3	16.0	10.6	13.5	10.1	6.7
			46 - 60	25.3	19.0	12.7	23.5	17.6	11.8	16.1	12.0	8.0
Medium	Medium	Light	0 - 25	19.3	14.5	9.7	17.2	12.9	8.6	8.4	6.3	4.2
			26 - 45	19.7	14.8	9.9	17.6	13.2	8.8	8.9	6.7	4.5
			46 - 60	20.4	15.3	10.2	18.4	13.8	9.2	9.9	7.4	5.0
Heavy	Medium	Light	0 - 25	24.8	18.6	12.4	21.9	16.5	11.0	9.1	6.8	4.5
			26 - 45	25.1	18.9	12.6	22.3	16.8	11.2	9.6	7.2	4.8
			46 - 60	25.9	19.4	12.9	23.1	17.3	11.6	10.7	8.0	5.3
Heavy	Heavy	Light	0 - 25	31.3	23.5	15.7	27.9	21.0	14.0	12.1	9.0	6.0
			26 - 45	31.7	23.8	15.8	28.4	21.3	14.2	12.6	9.5	6.3
			46 - 60	32.4	24.3	16.2	29.1	21.8	14.6	13.7	10.2	6.8
Heavy	Heavy	Heavy	0 - 25	34.0	25.5	17.0	30.8	23.1	15.4	15.9	11.9	7.9
			26 - 45	35.2	26.4	17.6	32.1	24.0	16.0	17.4	13.1	8.7
			46 - 60	37.3	28.0	18.7	34.3	25.7	17.2	20.2	15.2	10.1

Copyright Standards NZ

© The Crown in right of New Zealand, administered by the New Zealand Standards Executive. Access to this standard has been sponsored by the Ministry of Business, Innovation, and Employment under copyright license LN001498. You are not permitted to reproduce or distribute any part of this standard without prior written permission from Standards New Zealand, on behalf of New Zealand Standards Executive, unless your actions are covered by Part 3 of the Copyright Act 1994.

Table 5.10 – Bracing demand for earthquake for various combinations of claddings for 1 and 2 storey buildings on concrete slab-on-ground (see 5.3.3)

2 kPa floor loads

Lower storey cladding	Single or top storey cladding	Roof cladding	Roof pitch degrees	Two storey buildings						Single storey		
				Lower storey			Top storey walls			Single storey walls		
				Earthquake zones								
				A	B	C	A	B	C	A	B	C
				Bracing demand in BUs/m² of floor area								
Light	Light	Light	0 -25	9.9	7.4	5.0	5.6	4.2	2.8	3.6	2.7	1.8
			26 - 45	10.3	7.7	5.1	6.0	4.5	3.0	4.0	3.0	2.0
			46 - 60	11.0	8.3	5.5	6.8	5.1	3.4	4.7	3.6	2.4
Medium	Light	Light	0 - 25	11.2	8.4	5.6	5.8	4.4	2.9	–	–	–
			26 - 45	11.6	8.7	5.8	6.3	4.7	3.1	–	–	–
			46 - 60	12.3	9.2	6.1	7.1	5.3	3.6	–	–	–
Heavy	Light	Light	0 - 25	13.5	10.1	6.7	6.2	4.6	3.1	–	–	–
			26 - 45	13.9	10.4	6.9	6.7	5.0	3.3	–	–	–
			46 - 60	14.6	10.9	7.3	7.6	5.7	3.8	–	–	–
Light	Light	Heavy	0 - 25	12.6	9.5	6.3	8.6	6.5	4.3	6.3	4.8	3.2
			26 - 45	13.8	10.3	6.9	9.9	7.4	4.9	7.5	5.6	3.7
			46 - 60	15.9	11.9	8.0	12.2	9.1	6.1	9.6	7.2	4.8
Medium	Light	Heavy	0 - 25	13.9	10.4	6.9	9.0	6.7	4.5	–	–	–
			26 - 45	15.0	11.3	7.5	10.2	7.7	5.1	–	–	–
			46 - 60	17.2	12.9	8.6	12.6	9.4	6.3	–	–	–
Heavy	Light	Heavy	0 - 25	16.2	12.1	8.1	9.5	7.1	4.7	–	–	–
			26 - 45	17.3	13.0	8.7	10.8	8.1	5.4	–	–	–
			46 - 60	19.5	14.6	9.7	13.2	9.9	6.6	–	–	–
Medium and Heavy	Medium	Heavy	0 - 25	15.6	11.7	7.8	9.9	7.4	4.9	6.9	5.2	3.5
			26 - 45	16.7	12.6	8.4	11.1	8.4	5.6	8.1	6.0	4.0
			46 - 60	18.9	14.2	9.4	13.5	10.1	6.7	10.2	7.7	5.1
Medium	Medium	Light	0 - 25	12.9	9.7	6.4	6.7	5.0	3.4	4.2	3.2	2.1
			26 - 45	13.3	10.0	6.6	7.2	5.4	3.6	4.6	3.4	2.3
			46 - 60	14.0	10.5	7.0	8.0	6.0	4.0	5.3	4.0	2.7
Heavy	Medium	Light	0 -25	15.2	11.4	7.6	7.1	5.3	3.5	–	–	–
			26 - 45	15.6	11.7	7.8	7.6	5.7	3.8	–	–	–
			46 - 60	16.3	12.2	8.1	8.5	6.3	4.2	–	–	–
Heavy	Heavy	Light	0 - 25	18.3	13.7	9.1	8.7	6.5	4.4	5.2	3.9	2.6
			26 - 45	18.6	14.0	9.3	9.2	6.9	4.6	5.6	4.2	2.8
			46 - 60	19.4	14.5	9.7	10.1	7.6	5.0	6.3	4.7	3.2
Heavy	Heavy	Heavy	0 - 25	21.0	15.7	10.5	12.0	9.0	6.0	7.9	5.9	4.0
			26 - 45	22.1	16.6	11.1	13.3	10.0	6.7	9.1	6.8	4.5
			46 - 60	24.3	18.2	12.1	15.8	11.8	7.9	11.2	8.4	5.6

NOTE – See 5.3.3.3 regarding additional half storeys in the roof space.

Copyright Standards New Zealand

© The Crown in right of New Zealand, administered by the New Zealand Standards Executive. Access to this standard has been sponsored by the Ministry of Business, Innovation, and Employment under copyright license LN001498. You are not permitted to reproduce or distribute any part of this standard without prior written permission from Standards New Zealand, on behalf of New Zealand Standards Executive, unless your actions are covered by Part 3 of the Copyright Act 1994.

5.4 Subfloor bracing design

5.4.1

Subfloors shall have a *bracing capacity* which is designed and constructed according to this section, in order to resist the *bracing demand* for the greater of wind or earthquake (not acting together) determined from 5.2 and 5.3.

5.4.2 *Distribution of subfloor bracing*

C5.4.2.1
The bracing lines at the maximum permitted spacing may not be evenly spaced across the building. The spacing between the bracing lines should be reduced to coincide with the line of bearers. In this way the bracing can be uniformly distributed throughout the floor area.

5.4.2.1 *Subfloor bracing systems : Bracing lines*

Bracing lines providing horizontal support shall run in 2 directions at right angles to each other and be located:

(a) In perimeter *foundation* and subfloor *framing*;

(b) In internal lines parallel to perimeter *foundation* and subfloor *framing*;

(c) At not more than 6 m *spacing*.

5.4.2.2 *Minimum bracing capacity in internal bracing lines*

Each internal *bracing line* shall have a *bracing capacity* not less than 70 *bracing units* and the *bracing elements* shall be evenly distributed along each line as far as is practicable. When a structural floor *diaphragm* is present no internal bracing lines are required within the boundary of the *diaphragm*.

C5.4.2.3
Refer to 7.3 for structural floor diaphragms.

5.4.2.3 *Minimum bracing capacity in external subfloor bracing lines*

Each external subfloor bracing line shall have a total *bracing capacity* of not less than:

(a) For buildings laterally supported on *bracing lines*: 10 *bracing units* times the length in metres of the *external wall*. *External walls* less than 3 m in length shall be supported by internal *bracing lines*; or

(b) For buildings with structural floor *diaphragms*: not less than 60 % of the total *bracing demand* for earthquake and 50 % of the total *bracing demand* for wind as required by table 5.5. Provided that where 2 offset parallel walls are located on one side of a building, the *bracing* shall be distributed in proportion to these wall lengths. Amd 1 Dec '00

5.4.3 *Subfloor bracing components*

5.4.3.1 *Single storey buildings with timber ground floors*

Subfloor bracing shall consist of one or more of the following components:

(a) Reinforced concrete masonry or reinforced masonry walls including corner *foundation walls* (greater than 1.5 m in length); Amd 1 Dec '00

(b) Exterior grade product tested to P21 Test (6.2.3);

(c) *Braced pile system* (consisting of 2 *piles* and a *diagonal brace*);

(d) *Cantilever piles* in accordance with 6.7;

(e) *Anchor piles* in accordance with 6.9;

(f) Sheet *bracing* on *stud* wall *framing* carried up to the floor *joists*.

Copyright Standards New Zealand

© The Crown in right of New Zealand, administered by the New Zealand Standards Executive. Access to this standard has been sponsored by the Ministry of Business, Innovation, and Employment under copyright license LN001498. You are not permitted to reproduce or distribute any part of this standard without prior written permission from Standards New Zealand, on behalf of New Zealand Standards Executive, unless your actions are covered by Part 3 of the Copyright Act 1994.

5.4.3.2 *Two storey buildings with timber ground floors*

Two *storey* buildings with timber ground floors shall be as follows:

(a) In all wind and seismic zones, buildings with a height (measured from the underside of the bottom plate of the lowest floor to the top of the roof) exceeding 1.7 times the width shall be attached to a continuous *foundation wall* around the entire perimeter, taken to the underside of the *wall plate* attached to the lower floor *joists*. The continuous *foundation wall* may be stepped, provided wall *framing* is constructed to directly support the building to the *foundation wall*.

(b) In all wind and seismic zones, buildings with a height not exceeding 1.7 times the width may be supported by *bracing* systems complying with 5.4.3.1.

C5.4.3.2

(a) This clause is aimed at providing a substantial mass in the foundations to resist overturning of slender structures subjected to wind and earthquake forces.

(b) It may be necessary in some wind and earthquake zones to use foundation walls to reduce the number of braced piles.

5.4.4 *Subfloor bracing element bracing capacity values*

Subfloor bracing shall be rated for wind and earthquake *capacity* as set out in table 5.11.

Table 5.11 – Bracing capacity ratings of subfloor bracing elements (see 5.4.4)

Description of bracing element	Bracing capacity in the horizontal direction for earthquake and wind resistance
	(BUs)
Reinforced concrete or reinforced masonry walls (greater than 1.5 m in length)	
If ratio $\left(\frac{\text{wall length}}{\text{average wall height}}\right)$ is:	
▶ Less than 0.75	0
▶ More than 0.75 but less than 1.5	42 BUs per metre of wall
▶ More than 1.5 but less than 3.0	100 BUs per metre of wall
▶ More than 3.0 but less than 4.5	200 BUs per metre of wall
▶ More than 4.5	300 BUs per metre of wall
Exterior grade product test to P21 Test (see 6.2.3)	As determined by test
Braced pile system (consisting of 2 piles and a diagonal brace)	120 BUs for earthquake 160 BUs for wind
Cantilever piles (driven timber piles) Rating per pile	30 BUs for earthquake 70 BUs for wind
Anchor piles Rating per pile	120 BUs for earthquake 160 BUs for wind

NOTE – Reinforced concrete and reinforced masonry bracing capacities are based on the limitations of fixings between the timber structure and the concrete component. Masonry *bracing capacity* values from NZS 4229 cannot be used with this Standard unless specific engineering design is applied to the connections between the timber structure and the masonry wall.

Copyright Standards New Zealand

© The Crown in right of New Zealand, administered by the New Zealand Standards Executive. Access to this standard has been sponsored by the Ministry of Business, Innovation, and Employment under copyright license LN001498. You are not permitted to reproduce or distribute any part of this standard without prior written permission from Standards New Zealand, on behalf of New Zealand Standards Executive, unless your actions are covered by Part 3 of the Copyright Act 1994.

C5.4.5
For example, where weaker cantilever piles support stronger diagonally braced or fully sheet lined timber frame systems, the bracing capacity of the cantilevered piles shall be used in the contribution to the horizontal support of the building.

C5.4.6
However, wherever practical, bracing should be placed near the outer corner of buildings to resist torsion loads.

5.4.5 *Stacked bracing systems*
Where one *bracing* system vertically supports another *bracing* system, the lower *bracing capacity* of either of the *bracing* systems shall be used.

5.4.6 *Minimum number of subfloor braces*
In no case shall any building that has subfloor bracing consisting only of *braced pile systems* or *anchor piles* have less than 4 *braced pile systems* or 4 *anchor piles,* in each direction placed symmetrically around the building perimeter.

5.4.7 *Bracing of decks*
For *bracing* of *decks* see 7.4.2.

5.5 Wall bracing design
Wall bracing shall be designed and constructed in accordance with this clause to resist the *bracing demand* for wind and earthquake determined from 5.2 and 5.3.

5.5.1 Wall bracing systems
The wall system to resist horizontal *loads* in any *storey* shall consist of *wall bracing elements* complying with 8.3 in the following walls:

(a) External *braced* walls as required by 5.5.3 and 5.5.6; and

(b) Internal *braced* walls on *bracing lines* as required by 5.5.3 and 5.5.5;

(c) *Braced* walls connected to the 4 edges of a *diaphragm* complying with 7.3 or 13.5 as required by 5.6.2.

5.5.2 *Wall bracing element bracing capacity values*
Wall bracing elements shall be rated for wind and earthquake *bracing capacity* by test (see 8.3) or as set out in table 8.1.

5.5.3 *Distribution of bracing throughout building*
Wall bracing elements shall be located as close as possible to the corners of *external walls* and evenly throughout the building.

5.5.4 *Braced walls at angles to the bracing lines*
Where *braced walls* are at angles to the *bracing lines* they shall contribute to the *bracing* as follows:

(a) 30° to one direction and 60° in the other direction, 0.87 and 0.5 times the value of the wall *bracing capacity* respectively;

(b) 45° to both directions, 0.7 times the value of the wall *bracing capacity*;

(c) Values for other angles shall be obtained by multiplying the *bracing capacity* of the element by the cosine of the angle between the element and the *bracing line* being considered.

Copyright Standards New Zealand

© The Crown in right of New Zealand, administered by the New Zealand Standards Executive. Access to this standard has been sponsored by the Ministry of Business, Innovation, and Employment under copyright license LN001498. You are not permitted to reproduce or distribute any part of this standard without prior written permission from Standards New Zealand, on behalf of New Zealand Standards Executive, unless your actions are covered by Part 3 of the Copyright Act 1994.

5.5.5 *Distribution of bracing walls on internal bracing lines*

5.5.5.1 *Alignment of bracing lines*

Bracing lines shall be parallel to *external walls* of the main building or *wings* and *blocks,* where these are required to be *braced* separately (see 5.1.5 and figure 5.5).

5.5.5.2 *Spacing of internal bracing lines*

Bracing lines in any *storey* shall be at not more than 6 m centres in each direction between *external walls*, provided that there need be no *bracing lines* within the area covered by a *diaphragm* complying with 5.6.1 supported by walls complying with 5.6.2. Where *bracing lines* are *spaced* between 5 m and 6 m and there is a low density (less than 600 kg/m^3) ceiling *lining* then an additional 140 mm x 35 mm *top plate* shall be fitted (see figure 8.18). The distance of the first *bracing line* from an *external wall* may be 7.5 m where *dragon ties* provide lateral support to the *external wall* (see figure 8.1).

C5.5.5.2

Bracing lines in each storey are considered separately and need not coincide with those of the storey below nor with the subfloor lines of horizontal support required by section 6.

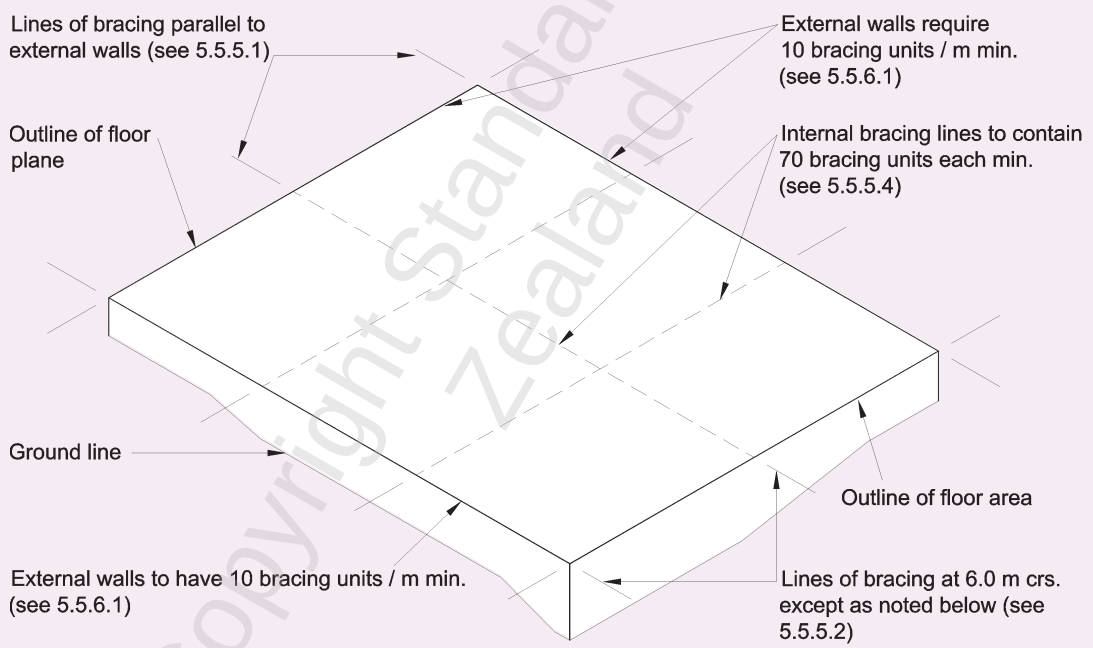

NOTE -
Parallel internal (see 5.5.5) and external (see 5.5.6) walls which are offset from the bracing line by up to 2.0 m can be considered as contributing to that line (see 5.5.6.2).

BRACING LINE EXCEPTIONS
(1) The distance from an external wall to the first internal bracing line may be increased to 7.5 m when dragon ties are used (see 5.5.5.2).
(2) Lines of bracing shall be reduced to 5.0 m where a low strength material with a density less than 600 kg / m^3 such as softboard or tiles line the ceiling unless the top plate is strengthened as shown in figure 8.18.
(3) Diaphragm ceilings up to 15 m maximum span do not require bracing lines (see figure 13.4).

Figure 5.5 – Distribution of bracing lines (see 5.5.5.1)

Copyright Standards New Zealand

© The Crown in right of New Zealand, administered by the New Zealand Standards Executive. Access to this standard has been sponsored by the Ministry of Business, Innovation, and Employment under copyright license LN001498. You are not permitted to reproduce or distribute any part of this standard without prior written permission from Standards New Zealand, on behalf of New Zealand Standards Executive, unless your actions are covered by Part 3 of the Copyright Act 1994.

5.5.5.3 *Bracing elements distribution*
The *bracing* elements shall be evenly distributed along each line as far as is possible.

5.5.5.4 *Minimum bracing capacity of an internal bracing line*
Each internal *bracing line* shall have a total *bracing capacity* of not less than 70 *bracing units* contributed by either of the following or any combination of them:

(a) *Wall bracing elements* in *internal walls* on the *bracing line*;

(b) Pairs of *wall bracing elements* one on each side of the *bracing line*, in *internal walls*, not more than 2 m away and parallel to it.

5.5.6 *Bracing capacity of external walls*

5.5.6.1 *Minimum bracing capacity of external walls*
Each *external wall* in any *storey* shall have a total *bracing capacity* of at least 10 *bracing units* per metre length. For walls with a *dragon tie* attached see 8.3.3.1 to 8.3.3.4.

5.5.6.2 *Offset parallel external walls*
Parallel *external walls* offset not more than 2 m from each other may be treated as one *external wall*.

5.6 Diaphragms

5.6.1 *Diaphragms with a braced wall system*
Diaphragms may be used with a *braced* wall system to resist horizontal *loads*. They shall be directly connected to walls and shall consist of either:

(a) A floor *diaphragm* complying with 7.3 and not longer than 15 m; or

(b) A ceiling *diaphragm* complying with 13.5.

5.6.2 Walls connected to diaphragms
Walls connected to *diaphragms* shall be as follows:

(a) Each edge of the *diaphragm* shall be connected to a wall having a *bracing capacity* of not less than 10 *bracing units* /m of *diaphragm* dimension, measured at right angles to the wall being considered, provided that such a wall shall have a *bracing capacity* of not less than 100 *bracing units*;

(b) Where 2 *diaphragms* are connected to a wall, then the *bracing capacity* of that wall shall be greater than the sum of those required for each *diaphragm*.

Copyright Standards New Zealand

© The Crown in right of New Zealand, administered by the New Zealand Standards Executive. Access to this standard has been sponsored by the Ministry of Business, Innovation, and Employment under copyright license LN001498. You are not permitted to reproduce or distribute any part of this standard without prior written permission from Standards New Zealand, on behalf of New Zealand Standards Executive, unless your actions are covered by Part 3 of the Copyright Act 1994.

SECTION 6
FOUNDATION AND SUBFLOOR FRAMING

6.1 General 6-3
6.2 Subfloor systems 6-3
6.3 Setting out 6-4
6.4 Piles 6-4
6.5 Ordinary piles 6-8
6.6 Driven timber piles 6-10
6.7 Cantilever piles 6-16
6.8 Braced pile systems 6-16
6.9 Anchor piles 6-23
6.10 Framed subfloor walls 6-23
6.11 Foundation walls (concrete and concrete masonry) 6-27
6.12 Bearers 6-34
6.13 Stringers 6-39
6.14 Prevention of dampness 6-41
6.15 Nailing schedule 6-41

Table

6.1 Pile footings 6-8
6.2 Spacing of driven round timber piles 6-13
6.3 Subfloor jack studs 6-26
6.4 Cross section dimensions of foundation wall footings not supporting masonry veneer 6-30
6.5 Minimum lap or anchorage lengths for reinforcing bars 6-31
6.6 Bearers 6-38
6.7 Stringer sizes and fixings 6-39
6.8 Nailing schedule for hand driven and power driven nails 6-42

Copyright Standards New Zealand

© The Crown in right of New Zealand, administered by the New Zealand Standards Executive. Access to this standard has been sponsored by the Ministry of Business, Innovation, and Employment under copyright license LN001498. You are not permitted to reproduce or distribute any part of this standard without prior written permission from Standards New Zealand, on behalf of New Zealand Standards Executive, unless your actions are covered by Part 3 of the Copyright Act 1994.

Figure

6.1 Support of loadbearing wall **6**-5

6.2 Ordinary piles **6**-9

6.3 Fixing of bearers and jack studs to ordinary piles **6**-11

6.4 Driven timber piles **6**-12

6.5 Cantilever piles **6**-17

6.6 Braced pile system – Brace connected to pile **6**-18

6.7 Braced pile system – Brace connected to bearer **6**-19

6.8 Braced pile system – Brace connected to joist **6**-20

6.9 Anchor pile directly connected to joist and bearer **6**-24

6.10 Anchor pile directly connected to bearer only **6**-25

6.11 Foundation walls **6**-28

6.12 Foundation walls – Openings and steps **6**-29

6.13 Cantilevered foundation walls **6**-31

6.14 Reinforced concrete masonry foundation walls (not cantilevered) supporting masonry veneer **6**-32

6.15 Reinforced masonry and reinforced concrete masonry foundation walls (not cantilevered) **6**-33

6.16 Fixing of wall plates to foundation walls **6**-35

6.17 Fixing of bearers perpendicular to foundation walls **6**-36

6.18 Fixing of bearers in line with foundation walls **6**-37

6.19 Joints in bearers **6**-40

6.20 Fixing of stringers to foundation walls **6**-40

6.21 Clearance between cladding and adjacent ground **6**-42

Copyright Standards New Zealand

© The Crown in right of New Zealand, administered by the New Zealand Standards Executive. Access to this standard has been sponsored by the Ministry of Business, Innovation, and Employment under copyright license LN001498. You are not permitted to reproduce or distribute any part of this standard without prior written permission from Standards New Zealand, on behalf of New Zealand Standards Executive, unless your actions are covered by Part 3 of the Copyright Act 1994.

6 FOUNDATION AND SUBFLOOR FRAMING

6.1 General

6.1.1

This section contains the requirements for subfloor structures supporting suspended timber floors, for live *loads* up to 2 kPa. Subfloor structures for floor live *loads* of 3 kPa are set out in section 14. *Foundations* for concrete floors are covered in section 7.

C6.1

This section is arranged to follow the decision-making process in the design of a foundation structure, as follows:

(a) Select potentially suitable subfloor systems for the building from 6.2.

(b) Determine the set out of the whole subfloor structure from the plan layout of the super-structure floor loads and roof loads, by using 6.3, and select appropriate spans for bearers and floor joists from section 7.

(c) Determine the wind and earthquake loads to be resisted by the subfloor system from section 5.

(d) Distribute subfloor bracing evenly around the building plan area, by allocating bracing lines to the lines of support, in accordance with the rules in section 5.

(e) Provide the bracing capacity in each direction as determined from section 5.

(f) Design and specify all subfloor elements, the sizes of their footings, member connection details, load performance characteristics, from 6.4 to 6.12.

(g) Ensure minimum subfloor clearance, access and ventilation requirements of 6.14 are met.

6.1.2 *Relocated buildings*

The subfloor *bracing* of relocated buildings shall comply with 5.4.

6.2 Subfloor systems

6.2.1 *Vertical support*

The *joists* of suspended timber floors shall be supported on any of the subfloor systems of the following, or a combination of more than one, provided that at *external walls* of 3 *storey* buildings *joists* shall be supported by (f):

(a) A *bearer* directly supported by a row of *piles*;

(b) A *bearer* supported by *jackstuds*, supported by a row of *piles*;

(c) A *bearer* supported by *jackstuds*, supported by a *foundation wall*;

(d) A timber framed subfloor wall supported by a row of *piles*;

(e) A timber framed subfloor wall supported by a *foundation wall*;

(f) A *stringer* or *wall plate* supported by a *foundation wall*.

NOTE – Rows of *piles* may consist of any combination of *ordinary piles*, driven *cantilever piles*, braced *piles*, or *anchor piles* depending on the *bracing* requirements.

C6.1.2

Temporary bracing needs to be provided until the subfloor bracing work is complete.

Copyright Standards New Zealand

© The Crown in right of New Zealand, administered by the New Zealand Standards Executive. Access to this standard has been sponsored by the Ministry of Business, Innovation, and Employment under copyright license LN001498. You are not permitted to reproduce or distribute any part of this standard without prior written permission from Standards New Zealand, on behalf of New Zealand Standards Executive, unless your actions are covered by Part 3 of the Copyright Act 1994.

6.2.2 *Horizontal support*

6.2.2.1
Suspended timber floors and superstructures shall be braced against horizontal loadings by the *bracing* systems provided and distributed in accordance with section 5.

6.2.2.2
Subfloor *bracing elements* (piles, walls etc.) shall be assigned ratings as set out in table 5.11, unless they are a proprietary system tested in accordance with 6.2.3, in which case they shall be assigned the *bracing rating* from those tests.

6.2.3 *Proprietary subfloor bracing systems*

6.2.3.1
Proprietary subfloor *bracing elements* shall be tested in accordance with BRANZ Technical Paper P21, and rated in accordance with BRANZ Supplement to P21.

6.2.3.2
Such proprietary *bracing* systems shall be identical in all respects to the *bracing elements* tested and shall be installed with the fixings used in the above tests. (See industry information in section 20).

6.3 Setting out

6.3.1 *General*
Lines of vertical support (rows of *piles* or walls as selected from 6.2.1) shall be provided at *spacings* to suit the layout of the building superstructure, and the span of the floor *joists* and *bearers*.

6.3.2 *Support of loadbearing and bracing walls*

6.3.2.1
A *bearer* or subfloor *framing* wall, shall be provided within 200 mm, centre-to-centre, of *loadbearing walls* in the *storey* immediately above, and which are at right angles to the *joists* (see figure 6.1(A)).

6.3.2.2
Where a *bearer* supports a loadbearing or *bracing* wall running parallel to the floor *joists*, it shall itself be supported by a *pile* or *jack stud* within 200 mm, centre-to-centre, of the loadbearing or *bracing* wall (see figure 6.1(B)).

6.3.3 *Distribution of subfloor bracing*
See section 5.

6.4 Piles

6.4.1 *Height of piles*

6.4.1.1
The height of *piles* shall be:

(a) Above *finished ground level*: not less than 150 mm;

Copyright Standards New Zealand

© The Crown in right of New Zealand, administered by the New Zealand Standards Executive. Access to this standard has been sponsored by the Ministry of Business, Innovation, and Employment under copyright license LN001498. You are not permitted to reproduce or distribute any part of this standard without prior written permission from Standards New Zealand, on behalf of New Zealand Standards Executive, unless your actions are covered by Part 3 of the Copyright Act 1994.

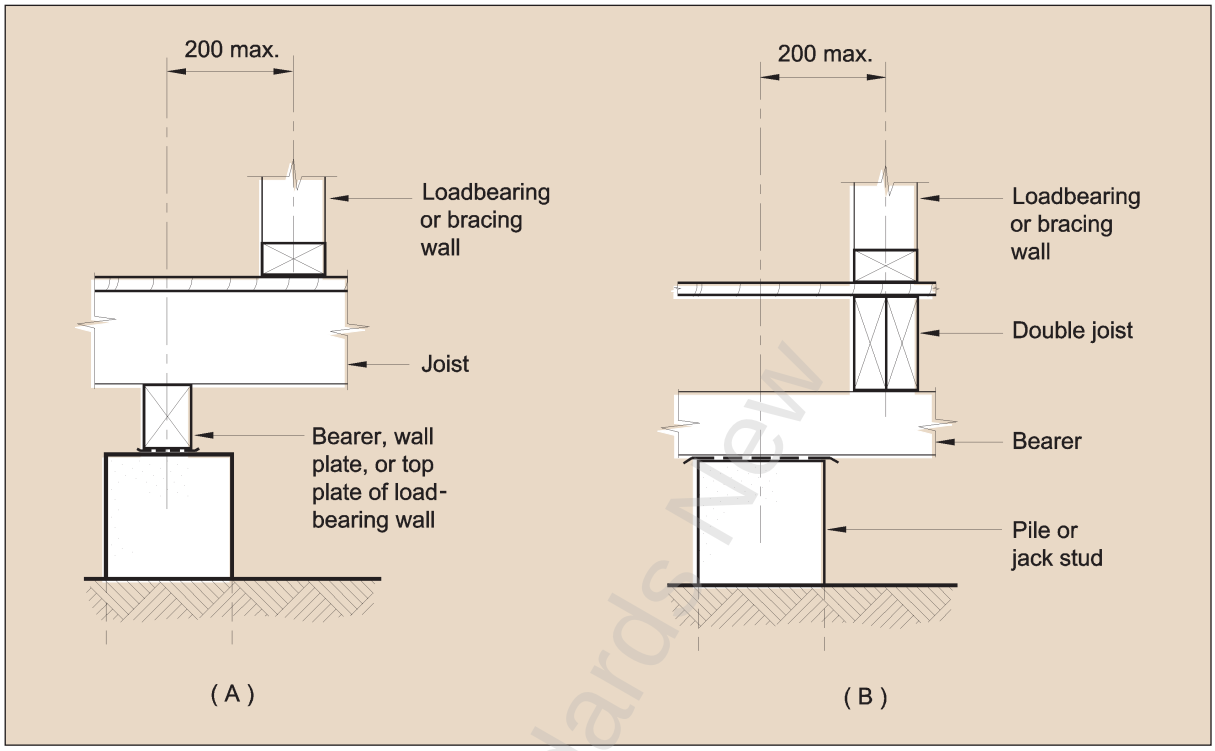

Figure 6.1 – Support of loadbearing wall (see 6.3.2.1 and 6.3.2.2)

(b) Above *cleared ground level*: not more than;

(i) 600 mm for *ordinary piles* directly supporting *jack studs*;

(ii) 1200 mm for *cantilevered piles*;

Amd 1 Dec '00

(iii) 600 mm to the highest connection for *anchor piles*;

(iv) 1.5 m for all other concrete or concrete masonry braced or *ordinary piles*;

(v) 3.0 m for timber *ordinary piles* and braced piles (see figures 6.6, 6.7 and 6.8), when they directly support *bearers*.

(c) No timber pile shall be cut off closer than 300 mm to *finished ground level*. This distance may be reduced to 150 mm where a bituminous *damp-proof course*, or other suitable impervious material is placed between the *pile* and *framing* timbers and overlaps these timbers by at least 6 mm (see figure 6.3). See 6.4.3.3 for pile treatment.

Amd 1 Dec '00

6.4.1.2
Pile tops shall be at levels to suit the subfloor *framing*.

6.4.2 ***Cross sections of piles***
The cross section of a *pile* shall have a minimum dimension of:

(a) 200 mm sides or diameter for parallel-sided concrete *piles*;

Amd 1 Dec '00

(b) 150 mm sides or diameter at the top and 200 mm sides or diameter at the bottom for tapered concrete *piles*;

© The Crown in right of New Zealand, administered by the New Zealand Standards Executive. Access to this standard has been sponsored by the Ministry of Business, Innovation, and Employment under copyright license LN001498. You are not permitted to reproduce or distribute any part of this standard without prior written permission from Standards New Zealand, on behalf of New Zealand Standards Executive, unless your actions are covered by Part 3 of the Copyright Act 1994.

(c) 190 mm sides for concrete masonry *piles*;

(d) 140 mm diameter for round timber *piles*. See NZS 3605;

(e) 125 mm sides for square sawn timber *piles*. Amd 1 Dec '00

6.4.3 *Materials for piles*

6.4.3.1
Concrete for *piles* shall be ordinary grade concrete of 17.5 MPa minimum strength, complying with NZS 3109, except as required for durability in 4.8.

6.4.3.2
The materials and workmanship of concrete masonry *piles* shall comply with NZS 4210.

6.4.3.3
Timber *piles* shall comply with NZS 3605 and be treated to H5 of NZS 3640. Where a timber pile has been cut after treatment, the well dried cut surface shall be brush-treated with a liberal application of either creosote, zinc naphthenate, TBTO (bis-(tri-n-butyltin) oxide) or TBTN (bis-(tri-n-butyltin)naphthenate). The surface shall not be cut for fixings and other purposes closer than 150 mm to the *finished ground level*.

6.4.4 *Pile reinforcement*

Ordinary concrete *piles* and concrete masonry *piles* shall be reinforced with one D10 bar, placed centrally throughout the length of all concrete *piles* exceeding 750 mm long and concrete masonry *piles* exceeding 500 mm long.

6.4.5 *Pile footings*

6.4.5.1 ***General***
Except for *driven timber piles*, each *pile* shall be provided with a concrete *footing*.

Concrete *footings* shall be:

(a) A precast concrete *footing* not less than 100 mm thick, founded on a compacted granular bedding material to a minimum depth of 25 mm, on undisturbed *good ground,* to obtain even bearing to the excavated surface, together with cast-*in-situ* concrete embedment; or

(b) A cast-*in-situ* concrete *footing* against undisturbed *good ground*.

6.4.5.2 ***Materials***
Concrete for *footings* shall be ordinary grade concrete of 17.5 MPa minimum strength, complying with NZS 3109, except as required by 4.8.

Copyright Standards New Zealand

© The Crown in right of New Zealand, administered by the New Zealand Standards Executive. Access to this standard has been sponsored by the Ministry of Business, Innovation, and Employment under copyright license LN001498. You are not permitted to reproduce or distribute any part of this standard without prior written permission from Standards New Zealand, on behalf of New Zealand Standards Executive, unless your actions are covered by Part 3 of the Copyright Act 1994.

6.4.5.3 ***Minimum depth***

The bottom of a *pile footing* shall be at a depth below *cleared ground level* of at least the thickness of the *footing* as given by 6.4.5.4, but not less than 200 mm.

6.4.5.4 ***Thickness***

The thickness of a *pile footing* shall be not less than:

(a) *Ordinary piles*:

(i) Precast concrete: 100 mm

(ii) Timber: 200 mm

(b) Braced *piles*: 450 mm;

(c) *Anchor piles*: 900 mm.

6.4.5.5 ***Plan size***

Footings shall have the minimum plan dimensions given by table 6.1, except that no *footing* to an *anchor pile* (or braced pile) shall be less than 350 mm x 350 mm if square, or 400 mm diameter if circular. (See table 14.6 for square *pile footings* for 3 kPa *floor loads*).

6.4.5.6 ***Embedment***

Each *pile* not cast integrally with its *footing,* shall be embedded in its *footing,* such that there is concrete to a depth of 100 mm (minimum) below the bottom of the pile. The *pile* shall be embedded in its *footing* sufficiently, or temporarily braced, to provide stability during construction.

6.4.5.7 ***Loading***

Cast-*in-situ piles* or *piles* embedded in a concrete *footing* shall not be fully loaded with the dead weight of the building until the concrete is 24 hours old. The concrete shall not have a slump exceeding 60 mm at the time of placing and the ambient temperature shall not fall below 10 °C throughout the 24 hours. Where such conditions are not met then the waiting period shall be extended to 48 hours.

Amd 1
Dec '00

Copyright Standards New Zealand

© The Crown in right of New Zealand, administered by the New Zealand Standards Executive. Access to this standard has been sponsored by the Ministry of Business, Innovation, and Employment under copyright license LN001498. You are not permitted to reproduce or distribute any part of this standard without prior written permission from Standards New Zealand, on behalf of New Zealand Standards Executive, unless your actions are covered by Part 3 of the Copyright Act 1994.

Table 6.1 – Pile footings (see 6.4.5.5)

1.5 kPa and 2 kPa floor loads									
Span of		Minimum plan dimensions of footing supporting:							
				Floor(s), loadbearing walls and roof of:					
Bearers (m)	Joists (m)	Floor and non-loadbearing walls only		1 storey		2 storeys		3 storeys	
		Square* (mm)	Circular* (mm)	Square* (mm)	Circular* (mm)	Square* (mm)	Circular* (mm)	Square* (mm)	Circular* (mm)
1.3	2.0	200	230	275	310	325	370	350	400
	3.5	225	260	350	400	425	480	475	540
	5.0	275	310	400	460	500	570	550	620
	6.0	300	340	450	510	550	620	600	680
1.65	2.0	200	230	300	340	375	430	400	460
	3.5	250	290	400	460	475	540	525	600
	5.0	300	340	450	510	575	650	600	680
2.0	2.0	200	230	325	370	400	460	450	510
	3.5	275	310	425	480	525	600	575	650

* Minimum of the value on the table, or 350 mm min. if square, or 400 mm min. diameter if circular, for anchor and braced piles.

NOTE – Span is the average of the bearer or joist spans on either side of the pile under consideration.

Copyright Standards New Zealand

6.5 Ordinary piles

6.5.1 *Height of piles*

The height of *ordinary piles* shall be as defined in 6.4.1.1 and figure 6.2.

C6.5.2

Refer to 4.4 for durability of fixings.

6.5.2 *Fixings*

Fixings to concrete or timber *piles* shall be as follows:

(a) The fixing of a *bearer* or a *jack stud* to an ordinary concrete *pile* shall be made using 4 mm wire through the *pile* and stapled with 4 staples. At each end of the wire, one staple shall be driven below the hook and the other 2 staples driven over the 2 wires forming the hook (see figure 6.3).

(b) For timber *piles* use 2/4.9 mm *wire dogs* together with 2/100 x 3.75 nails or 4/100 x 3.75 nails, skew driven into the *piles*.

© The Crown in right of New Zealand, administered by the New Zealand Standards Executive. Access to this standard has been sponsored by the Ministry of Business, Innovation, and Employment under copyright license LN001498. You are not permitted to reproduce or distribute any part of this standard without prior written permission from Standards New Zealand, on behalf of New Zealand Standards Executive, unless your actions are covered by Part 3 of the Copyright Act 1994.

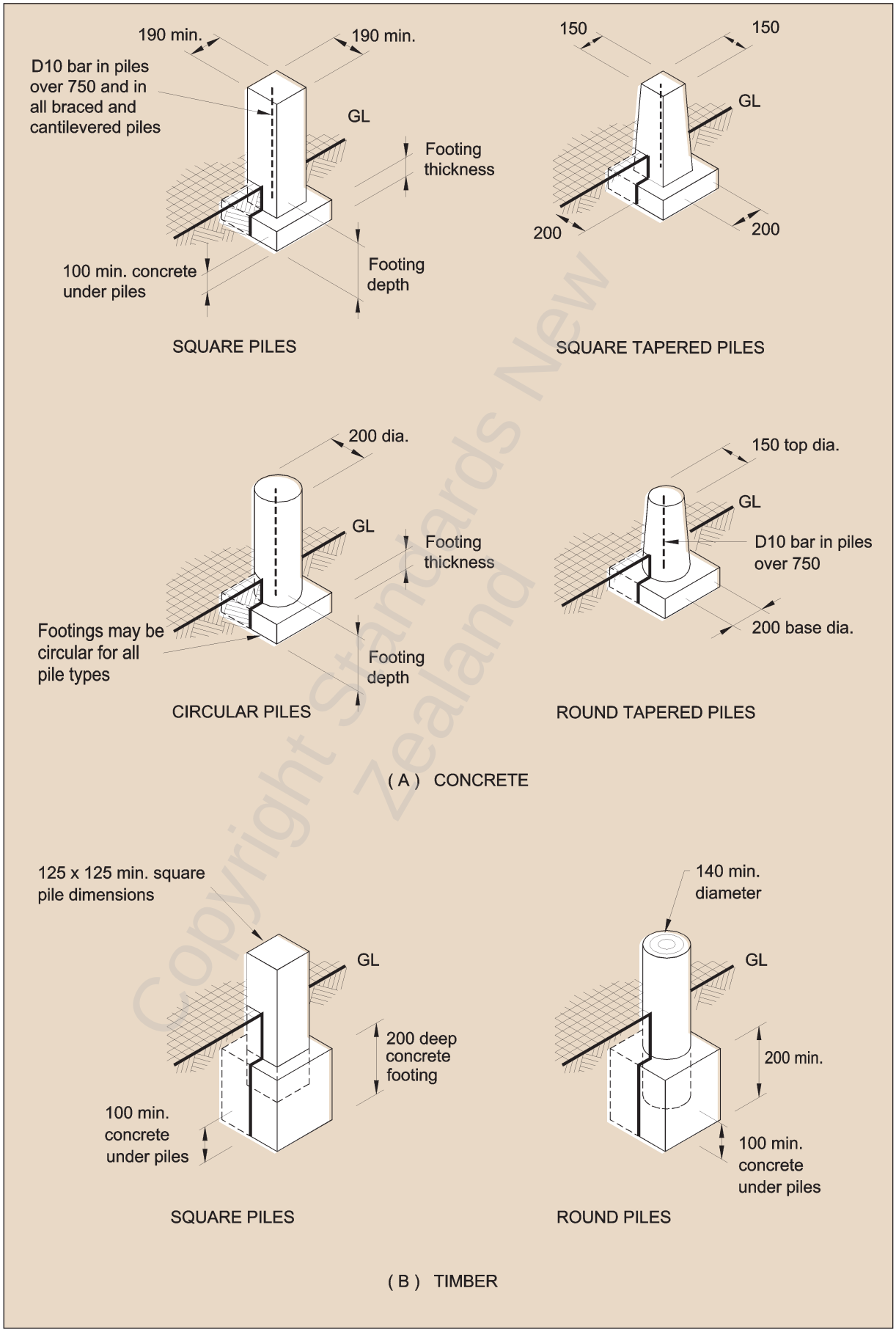

Figure 6.2 – Ordinary piles (see 6.5)

© The Crown in right of New Zealand, administered by the New Zealand Standards Executive. Access to this standard has been sponsored by the Ministry of Business, Innovation, and Employment under copyright license LN001498. You are not permitted to reproduce or distribute any part of this standard without prior written permission from Standards New Zealand, on behalf of New Zealand Standards Executive, unless your actions are covered by Part 3 of the Copyright Act 1994.

6.6 Driven timber piles

Driven timber piles may be used as *ordinary piles* (as per 6.5), *cantilever piles* (as per 6.7), or braced *piles* (as per 6.8).

6.6.1 *Limitations in length*

Driven timber piles consisting of natural rounds shall not exceed 3.6 m long.

6.6.2 *Soil bearing capacity*

6.6.2.1
Bore holes, complying with the applicable requirements of 3.3.5, shall be augured at sites selected in accordance with 3.3.8 and the information obtained from those bore holes shall be regarded as having been revealed by "excavation for *foundations*", for the purposes of 3.1.3.

6.6.2.2
The requirements of 3.3 shall be modified as set out in 6.6.2.3 to 6.6.2.6 inclusive.

6.6.2.3
Clause 3.3.4 shall be modified to require that the tip of the penetrometer shall be driven to 1.5 m below *cleared ground level*.

6.6.2.4
Clause 3.3.5 shall be modified to require that the bore hole shall be augured to a depth 800 mm below the base of the proposed adjacent *piles,* or to 2 m below *cleared ground level*, whichever is the deeper.

6.6.2.5
Clause 3.3.6(a) shall be modified to require that the listed unsuitable materials shall not be encountered at a depth greater than 300 mm below *cleared ground level*.

6.6.2.6
Clause 3.3.6(b) shall be modified to require that there shall be more than 2 blows per 75 mm at depths more than 600 mm below *cleared ground level*.

6.6.3 *Spacing of piles*

6.6.3.1
The maximum *spacing* between piles along the line of the *bearer* shall be determined from the driving resistance during the driving of *piles* in accordance with table 6.2, provided that the *spacing* shall not exceed the maximum span of *bearer,* as given by table 6.6.

6.6.3.2
In any case where a *pile* top has been driven to the level required by 6.6.6.1 and the set per blow still exceeds the maximum given by table 6.2, that pile shall not be regarded as providing support to the *bearer*. It will then be necessary to drive *piles* on either side of it to a depth where the set per blow will be within the maximum given by table 6.2.

Copyright Standards New Zealand

© The Crown in right of New Zealand, administered by the New Zealand Standards Executive. Access to this standard has been sponsored by the Ministry of Business, Innovation, and Employment under copyright license LN001498. You are not permitted to reproduce or distribute any part of this standard without prior written permission from Standards New Zealand, on behalf of New Zealand Standards Executive, unless your actions are covered by Part 3 of the Copyright Act 1994.

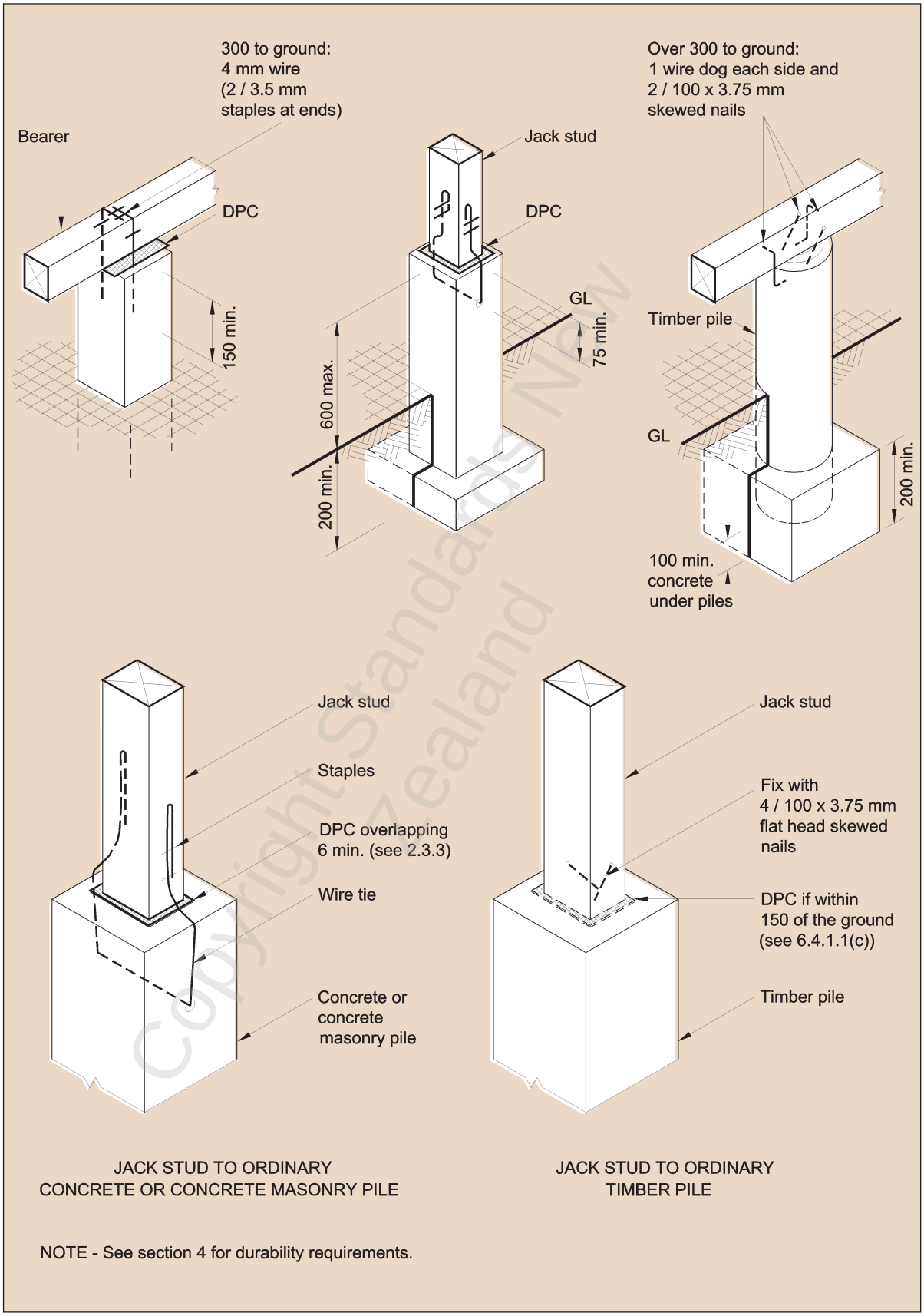

Figure 6.3 – Fixing of bearers and jack studs to ordinary piles (see 6.5.2)

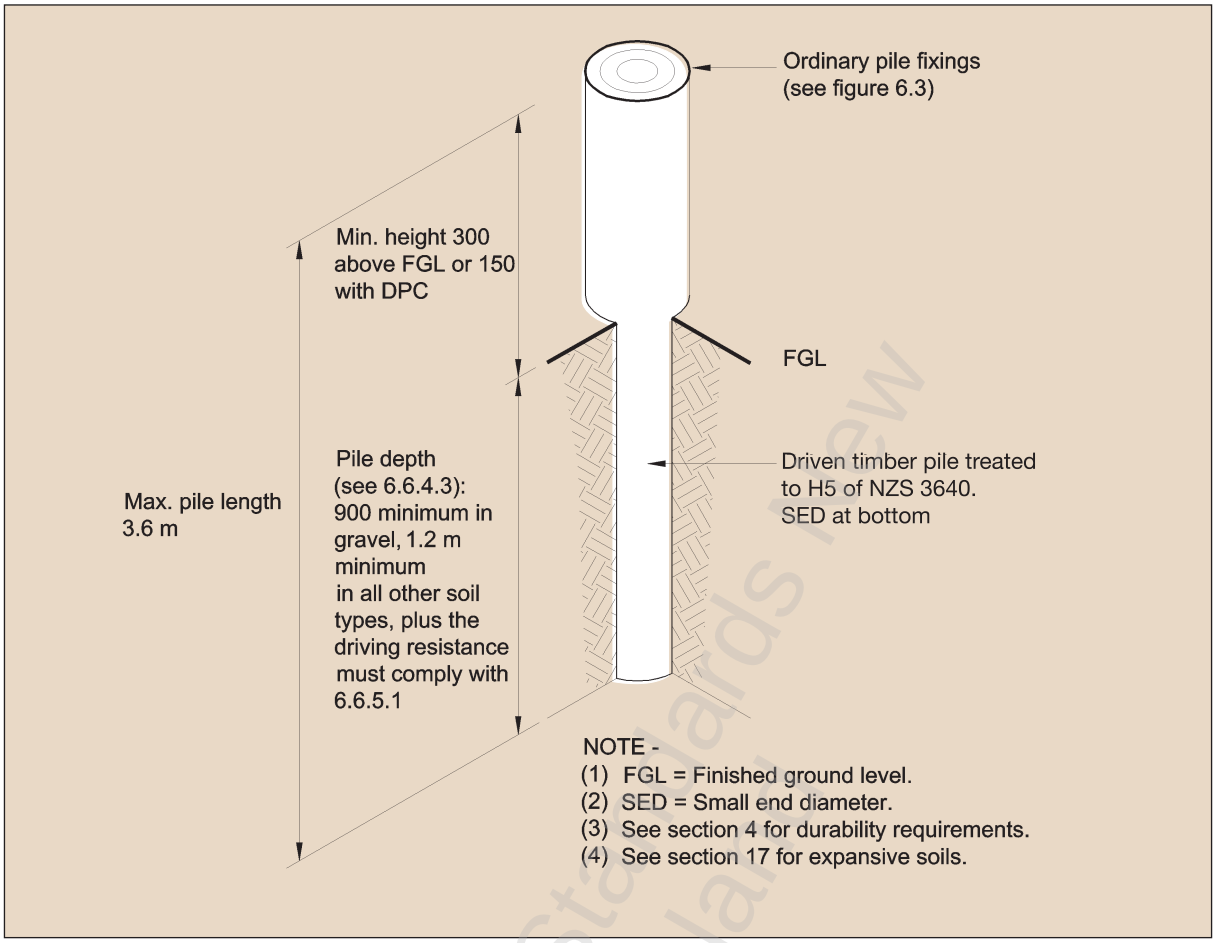

Figure 6.4 – Driven timber piles (see 6.6.4.3)

© The Crown in right of New Zealand, administered by the New Zealand Standards Executive. Access to this standard has been sponsored by the Ministry of Business, Innovation, and Employment under copyright license LN001498. You are not permitted to reproduce or distribute any part of this standard without prior written permission from Standards New Zealand, on behalf of New Zealand Standards Executive, unless your actions are covered by Part 3 of the Copyright Act 1994.

Copyright Standards New Zealand

© The Crown in right of New Zealand, administered by the New Zealand Standards Executive. Access to this standard has been sponsored by the Ministry of Business, Innovation, and Employment under copyright license LN001498. You are not permitted to reproduce or distribute any part of this standard without prior written permission from Standards New Zealand, on behalf of New Zealand Standards Executive, unless your actions are covered by Part 3 of the Copyright Act 1994.

Table 6.2 – Spacing of driven round timber piles (see 6.6.3.1)

(a) 1.5 kPa floor load

A Piles supporting floors only

Maximum span* of joists	Maximum spacing of piles (span of bearer) when the maximum set per blow (mm) does not exceed:		
	25	50	100
(m)	(m)	(m)	(m)
1.6	2.00	2.00	2.00
2.0	2.00	2.00	1.60
2.4	2.00	2.00	1.35
2.8	2.00	2.00	1.15
3.2	2.00	2.00	1.00
3.6	2.00	1.80	0.90
4.0	2.00	1.60	–
4.4	2.00	1.45	–
4.8	2.00	1.35	–
5.2	1.85	1.25	–
5.6	1.75	1.15	–

B Piles supporting floors and walls

Maximum span* of joists	Maximum loaded dimension† of wall supporting:		Maximum spacing of piles (span of bearer) supporting:				
	Light roof	Heavy roof	1 storey when the maximum set (mm) per blow does not exceed:			2 storeys when the maximum set (mm) per blow does not exceed:	
			25	50	100	25	50
(m)	(m)	(m)	(m)	(m)	(m)	(m)	(m)
1.2	2.4	1.2	2.00	2.00	1.60	2.00	2.00
1.6	3.2	1.6	2.00	2.00	1.20	2.00	1.70
2.0	4.0	2.0	2.00	2.00	0.95	2.00	1.40
2.4	4.8	2.4	2.00	1.60	–	1.70	1.15
2.8	5.6	2.8	2.00	1.40	–	1.45	1.00
3.2	6.0	3.2	1.80	1.20	–	1.30	0.85
3.6	6.0	3.6	1.60	1.10	–	1.15	–
4.0	6.0	4.0	1.45	0.95	–	1.05	–
4.4	6.0	4.4	1.30	0.90	–	0.95	–
4.8	6.0	4.8	1.20	–	–	0.85	–
5.2	6.0	5.1	1.10	–	–	–	–
5.6	6.0	5.6	1.00	–	–	–	–

* Span is the average of the joist spans on either side of the bearer under consideration.
† For definition of loaded dimension see 1.3.

Copyright Standards New Zealand

© The Crown in right of New Zealand, administered by the New Zealand Standards Executive. Access to this standard has been sponsored by the Ministry of Business, Innovation, and Employment under copyright license LN001498. You are not permitted to reproduce or distribute any part of this standard without prior written permission from Standards New Zealand, on behalf of New Zealand Standards Executive, unless your actions are covered by Part 3 of the Copyright Act 1994.

Table 6.2 – Spacing of driven round timber piles (continued) (see 6.6.3.1)

(b) 2 kPa floor load

C Piles supporting floors only

Maximum span* of joists	Maximum spacing of piles (span of bearer) when the maximum set per blow (mm) does not exceed:		
	25	50	100
(m)	(m)	(m)	(m)
1.6	2.00	2.00	1.75
2.0	2.00	2.00	1.40
2.4	2.00	2.00	1.15
2.8	2.00	2.00	1.00
3.2	2.00	1.73	–
3.6	2.00	1.55	–
4.0	2.00	1.40	–
4.4	1.90	1.25	–
4.8	1.75	1.15	–
5.2	1.60	1.05	–

D Piles supporting floors and walls

Maximum span* of joists	Maximum loaded dimension† of wall supporting:		Maximum spacing of piles (span of bearer) supporting:				
	Light roof	Heavy roof	1 storey when the maximum set (mm) per blow does not exceed:			2 storeys when the maximum set (mm) per blow does not exceed:	
			25	50	100	25	50
(m)	(m)	(m)	(m)	(m)	(m)	(m)	(m)
1.2	3.2	1.6	2.00	2.00	1.35	2.00	2.00
1.6	4.3	2.2	2.00	2.00	1.00	2.00	1.45
2.0	6.0	2.7	2.00	1.65	0.80	1.75	1.20
2.4	6.0	3.2	2.00	1.35	–	1.50	1.00
2.8	6.0	3.8	1.75	1.15	–	1.25	–
3.2	6.0	4.3	1.55	1.05	–	–	–
3.6	6.0	4.8	1.35	0.90	–	–	–
4.0	6.0	5.4	1.25	–	–	–	–
4.4	6.0	5.9	1.10	–	–	–	–
4.8	6.0	6.0	1.00	–	–	–	–
5.2	6.0	6.0	0.95	–	–	–	–

* Span is the average of the joist spans on either side of the bearer under consideration.
† For definition of loaded dimension see 1.3.

Copyright Standards New Zealand

© The Crown in right of New Zealand, administered by the New Zealand Standards Executive. Access to this standard has been sponsored by the Ministry of Business, Innovation, and Employment under copyright license LN001498. You are not permitted to reproduce or distribute any part of this standard without prior written permission from Standards New Zealand, on behalf of New Zealand Standards Executive, unless your actions are covered by Part 3 of the Copyright Act 1994.

6.6.4 *Driving of piles*

6.6.4.1
In all cases at least one test pile shall be driven before delivery of the remaining piles to ensure that adequate resistance to driving can be obtained. In cases where it is necessary to make penetrometer tests, and the number of blows per 75 mm of penetrometer penetration lies between 2 and 3, at least 4 test piles should be driven in locations distributed uniformly over the site of the proposed building.

6.6.4.2
Piles shall be driven with the small end diameter at the base.

C6.6.4.2
A suitable rig for driving piles would be a vehicle-mounted fence post driver that provides adequate control of the vertical and horizontal pile alignment during driving. This permits the required free fall of the hammer with free-running ropes, easy rotation of winching draw and pulleys, and clear retraction of the brake.

6.6.4.3
Piles shall be driven without damage to the *pile* until:

(a) The base of the *pile* has reached a depth below *cleared ground level* of not less than:

(i) 900 mm through gravel;

(ii) 1200 mm through other types of soil;

and

(b) The driving resistance required by 6.6.5 has been achieved.

See figure 6.4.

6.6.5 *Driving resistance*

6.6.5.1
The driving resistance shall be determined with an energy input of not less than 4800 J per blow. This energy input is delivered by a hammer having a mass *M* of not less than 200 kg, falling freely through a distance *h* of not less than 480/*M* metres (where *M* is in kilograms).

6.6.5.2
The set per blow shall be measured from a datum beam supported at least 1 m clear of the pile and the driving rig.

6.6.5.3
The set for each blow over not less than the final 200 mm of driving shall be clearly marked on the *pile*.

6.6.6 *Tolerances*

6.6.6.1
Pile tops shall be at a level to support *bearers* without packing.

6.6.6.2
Piles shall be in straight rows with a tolerance of 10 mm between the centre of any *pile* top and a straight line which is the centre of the *bearer*.

6.6.6.3
Piles shall be plumb with a tolerance of 15 mm/1 m length of *pile*.

Copyright Standards New Zealand

© The Crown in right of New Zealand, administered by the New Zealand Standards Executive. Access to this standard has been sponsored by the Ministry of Business, Innovation, and Employment under copyright license LN001498. You are not permitted to reproduce or distribute any part of this standard without prior written permission from Standards New Zealand, on behalf of New Zealand Standards Executive, unless your actions are covered by Part 3 of the Copyright Act 1994.

6.7 Cantilever piles

6.7.1 *Cantilever piles*

Cantilever piles shall be *driven timber piles* constructed in accordance with 6.6. See figure 6.5.

C6.7.2

Cantilever piles higher than 1.2 m lack adequate stiffness and strength. Cantilever piles differing too much in height and therefore stiffness amongst the group, will result in overloading the short piles and inducing damaging torsional loads in the foundation as a whole.

6.7.2 *Limitations in size*

Driven round timber piles shall be regarded as *cantilever piles* only when:

(a) No pile top is more than 1.2 m above *cleared ground level*; and

(b) No pile top within any 6 m wide strip of building plan area is more than twice the height above *cleared ground level*, of any other *pile* top within that strip.

6.7.3 *Fixings*

6.7.3.1 ***Bearer fixings to cantilever piles***

The fixing of *bearers* to *cantilever piles* shall have a *capacity* of 6 kN in both horizontal directions parallel and perpendicular to the bearer.

6.7.3.2

Alternatively to 6.7.3.1, timber *cantilevered piles* may be scarfed to accept the *bearer* and the two shall be fixed together with an M12 bolt or 12 mm diameter threaded rod with 50 mm x 50 mm x 3 mm washers. Not less than 70 mm of the timber *pile* cross section shall remain after scarfing, to support the bolt to the pile (see figure 6.5 and section 4 for permitted fixing materials) . Amd 1 Dec '00

6.7.3.3 ***Floor joists***

The floor *joist* closest to a *cantilever pile* shall be fixed to a *bearer* with a fixing having a minimum horizontal *capacity* of 6 kN in both of two directions, at right angles to one another (see figure 6.5). Amd 1 Dec '00

6.8 Braced pile systems

6.8.1 *General*

6.8.1.1

A *braced pile system* consists of 2 piles, each with a 450 mm deep *footing*, between which a *diagonal brace* is fixed. The brace shall be fixed to the bottom of one brace pile, and either the top of the other braced *pile* (see figure 6.6), or to a *bearer* within 200 mm of the other *pile* (see figure 6.7) or to a *joist* within 200 mm of the other *pile* (see figure 6.8).

6.8.1.2

A *braced pile system* may be repeated as a series of braced *piles* with braces sloping in the same direction as shown in figure 6.6.

C6.8.1.3

Two braces connected to the top of a pile overload the pile to bearer fixing.

Two braces connected in line to the bottom of a pile overload the pile footing.

6.8.1.3

Only one brace shall be attached to the top of a braced *pile*. Two braces may be attached to the bottom of a braced pile, but only if they are at right angles to each other and not in line.

Copyright Standards New Zealand

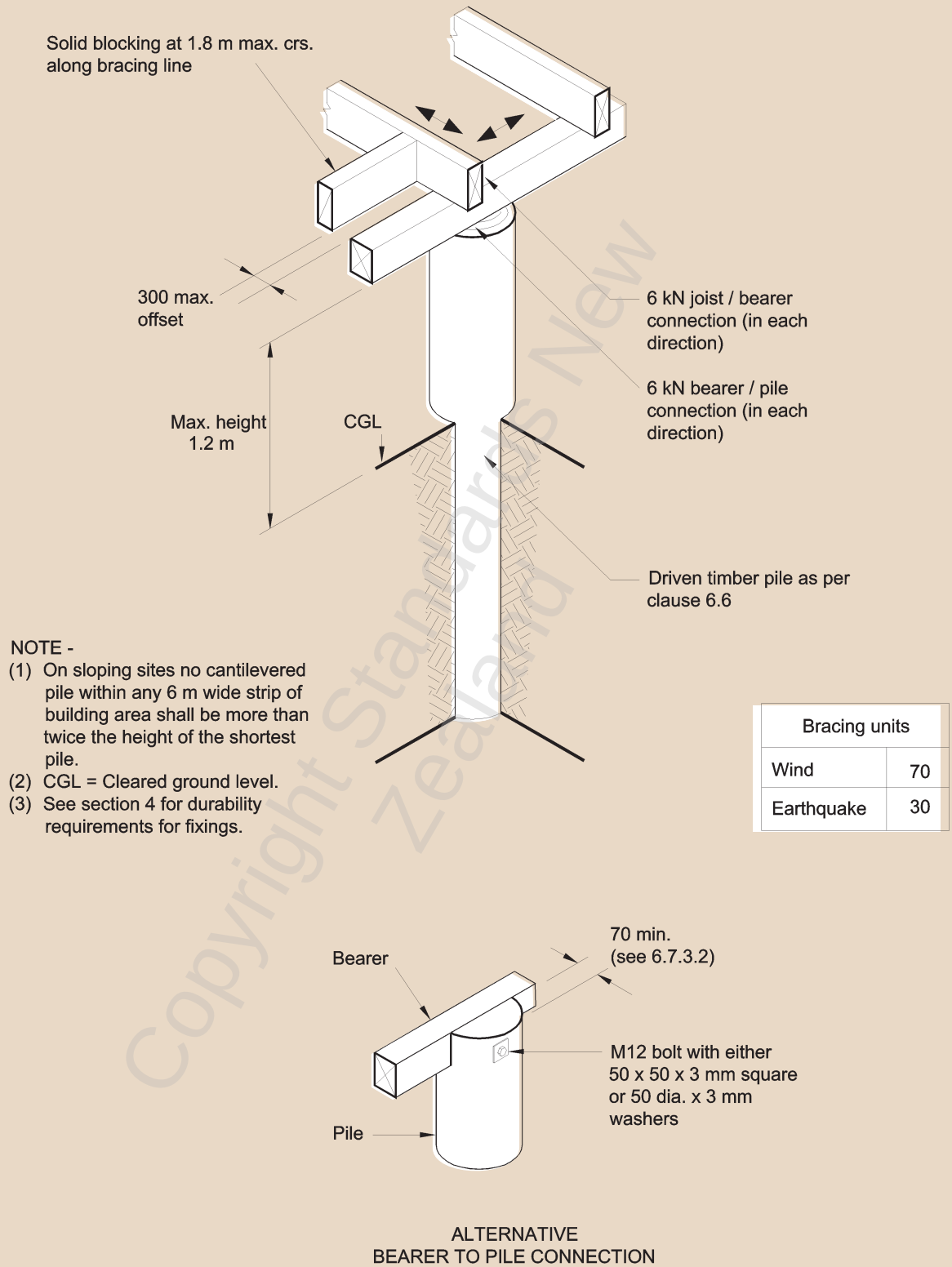

NOTE -
(1) On sloping sites no cantilevered pile within any 6 m wide strip of building area shall be more than twice the height of the shortest pile.
(2) CGL = Cleared ground level.
(3) See section 4 for durability requirements for fixings.

Bracing units	
Wind	70
Earthquake	30

ALTERNATIVE
BEARER TO PILE CONNECTION

Figure 6.5 – Cantilever piles (see 6.7)

© The Crown in right of New Zealand, administered by the New Zealand Standards Executive. Access to this standard has been sponsored by the Ministry of Business, Innovation, and Employment under copyright license LN001498. You are not permitted to reproduce or distribute any part of this standard without prior written permission from Standards New Zealand, on behalf of New Zealand Standards Executive, unless your actions are covered by Part 3 of the Copyright Act 1994.

© The Crown in right of New Zealand, administered by the New Zealand Standards Executive. Access to this standard has been sponsored by the Ministry of Business, Innovation, and Employment under copyright license LN001498. You are not permitted to reproduce or distribute any part of this standard without prior written permission from Standards New Zealand, on behalf of New Zealand Standards Executive, unless your actions are covered by Part 3 of the Copyright Act 1994.

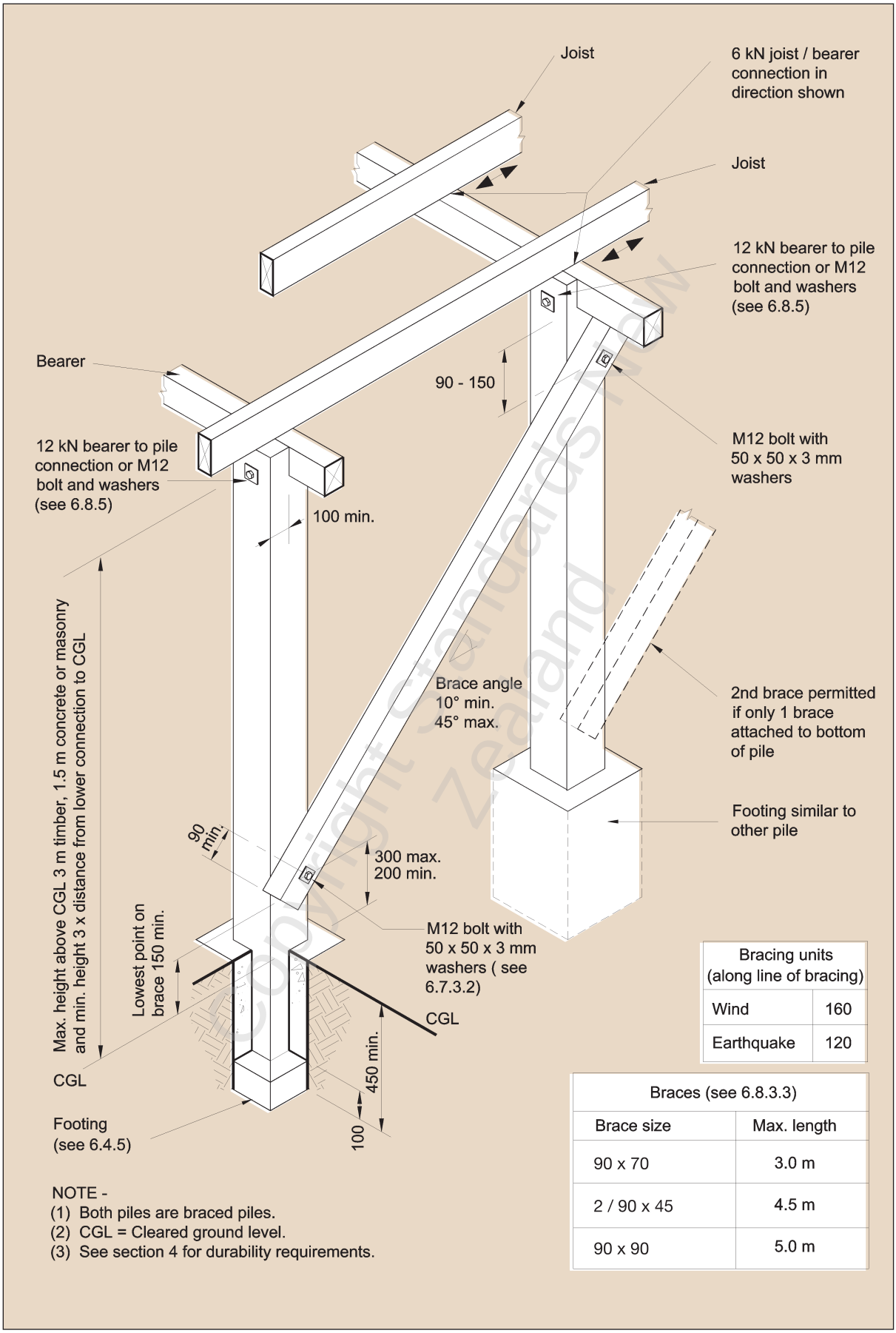

Bracing units (along line of bracing)	
Wind	160
Earthquake	120

Braces (see 6.8.3.3)	
Brace size	Max. length
90 x 70	3.0 m
2 / 90 x 45	4.5 m
90 x 90	5.0 m

NOTE -
(1) Both piles are braced piles.
(2) CGL = Cleared ground level.
(3) See section 4 for durability requirements.

Figure 6.6 – Braced pile system – Brace connected to pile (see 6.8)

© The Crown in right of New Zealand, administered by the New Zealand Standards Executive. Access to this standard has been sponsored by the Ministry of Business, Innovation, and Employment under copyright license LN001498. You are not permitted to reproduce or distribute any part of this standard without prior written permission from Standards New Zealand, on behalf of New Zealand Standards Executive, unless your actions are covered by Part 3 of the Copyright Act 1994.

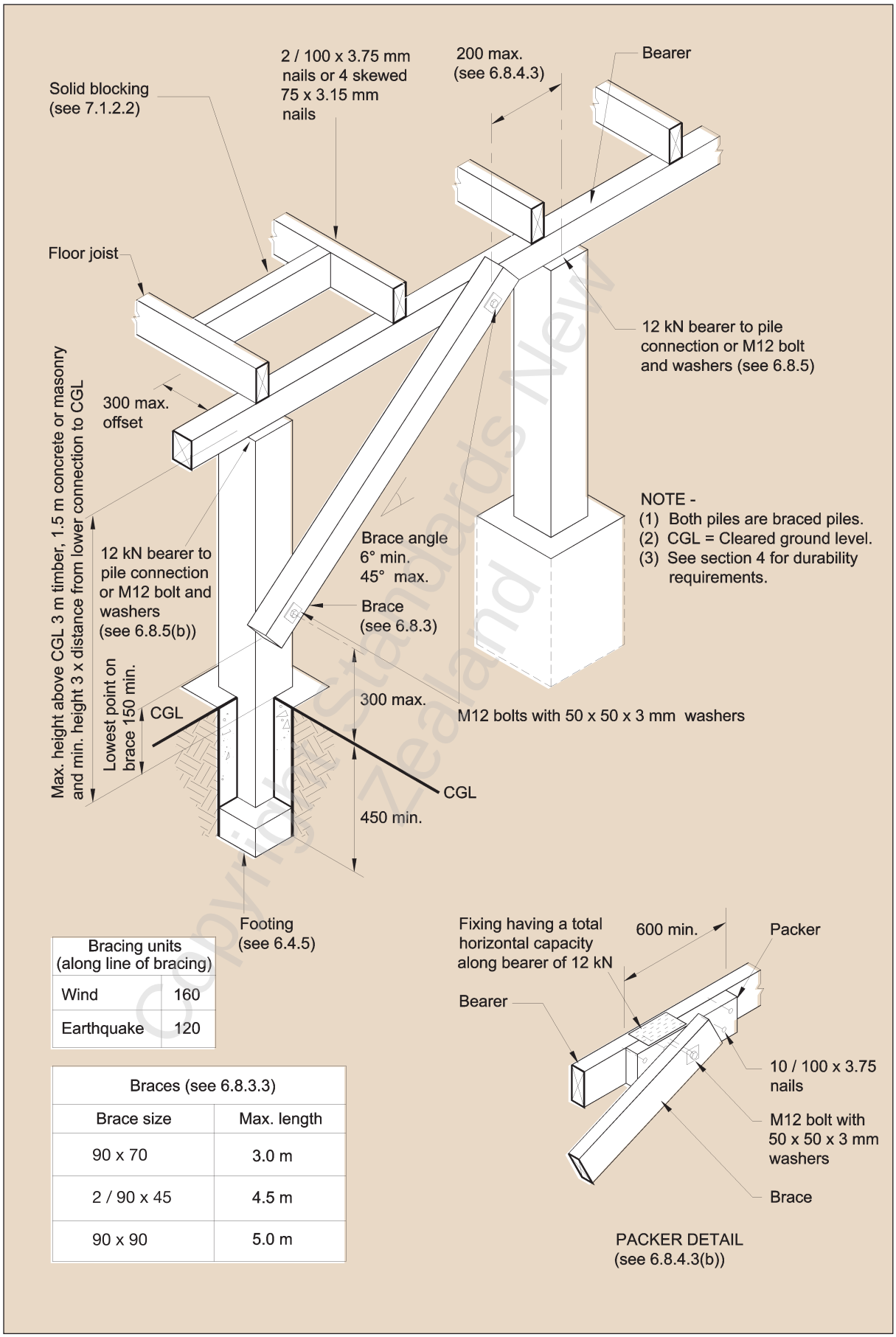

Bracing units (along line of bracing)	
Wind	160
Earthquake	120

Braces (see 6.8.3.3)	
Brace size	Max. length
90 x 70	3.0 m
2 / 90 x 45	4.5 m
90 x 90	5.0 m

Figure 6.7 – Braced pile system – Brace connected to bearer (see 6.8)

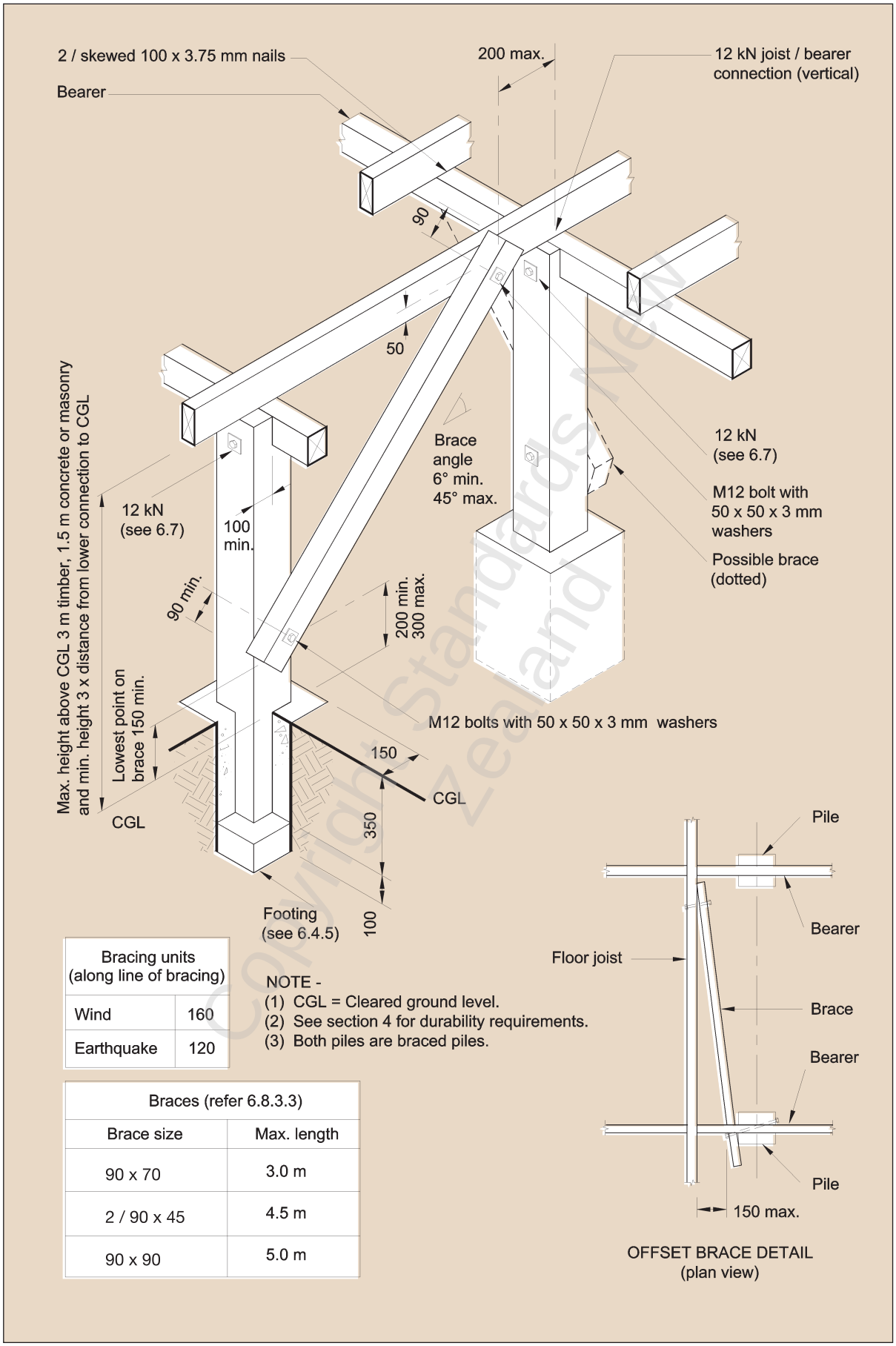

Bracing units (along line of bracing)	
Wind	160
Earthquake	120

NOTE -
(1) CGL = Cleared ground level.
(2) See section 4 for durability requirements.
(3) Both piles are braced piles.

Braces (refer 6.8.3.3)	
Brace size	Max. length
90 x 70	3.0 m
2 / 90 x 45	4.5 m
90 x 90	5.0 m

Figure 6.8 – Braced pile system – Brace connected to joist (see 6.8)

© The Crown in right of New Zealand, administered by the New Zealand Standards Executive. Access to this standard has been sponsored by the Ministry of Business, Innovation, and Employment under copyright license LN001498. You are not permitted to reproduce or distribute any part of this standard without prior written permission from Standards New Zealand, on behalf of New Zealand Standards Executive, unless your actions are covered by Part 3 of the Copyright Act 1994.

© The Crown in right of New Zealand, administered by the New Zealand Standards Executive. Access to this standard has been sponsored by the Ministry of Business, Innovation, and Employment under copyright license LN001498. You are not permitted to reproduce or distribute any part of this standard without prior written permission from Standards New Zealand, on behalf of New Zealand Standards Executive, unless your actions are covered by Part 3 of the Copyright Act 1994.

6.8.2 *Height*

6.8.2.1
The height of braced *piles* shall be as defined in 6.4.1.1 except the minimum height of a braced *pile* above *cleared ground level* shall be 3 times the distance from *cleared ground level* to the lower brace fixing (see figure 6.6).

C6.8.2.1
The minimum height of braced piles attached to long diagonal braces, at slopes in the order of 6 ° to the horizontal, can be in the order of 600 mm.

6.8.3 *Diagonal timber braces*

6.8.3.1
Diagonal timber braces shall slope between 10° and 45° to the horizontal except that 6° may be used when the braces are connected to a *bearer* or *joist*.

6.8.3.2
A diagonal timber *subfloor brace* shall consist of one continuous length of timber.

6.8.3.3
The dimensions of a diagonal timber *subfloor brace* shall be:

(a) Length not exceeding 3 m:.....90 mm x 70 mm;

(b) Length not exceeding 4.5 m:.....2/90 mm x 45 mm nailed together in accordance with table 6.8;

(c) Length not exceeding 5 m:.....90 mm x 90 mm.

6.8.3.4
The length of a *diagonal brace* shall be measured along the brace between the fixings at the upper and lower ends. If a brace passes an intermediate pile or *jack stud,* and is bolted to it by an M12 bolt through both centre lines, then the length of the brace may be taken as the greater of the distances between that bolt and the fixings at the upper or lower end.

6.8.3.5
The lower end of a diagonal timber *subfloor brace* shall not be closer than 150 mm to the *cleared ground level*.

6.8.4 *Brace connections*

6.8.4.1
A diagonal timber brace shall be connected at each end by an M12 bolt passing through the centre line of the brace not less than 90 mm from its end and at right angles to the brace. Alternative fixings with a minimum *capacity* of 17 kN in both tension and compression along the brace may be used.

6.8.4.2 ***Brace, lower end connection***
The lower end of the diagonal timber brace shall be fixed to the bottom of a braced *pile* by a bolt through the centre line of the pile, not more than 300 mm above *cleared ground level*. The height from this bolt to the top of the *pile* shall not be less than twice the distance from the bolt to the *cleared ground level*.

Copyright Standards New Zealand

© The Crown in right of New Zealand, administered by the New Zealand Standards Executive. Access to this standard has been sponsored by the Ministry of Business, Innovation, and Employment under copyright license LN001498. You are not permitted to reproduce or distribute any part of this standard without prior written permission from Standards New Zealand, on behalf of New Zealand Standards Executive, unless your actions are covered by Part 3 of the Copyright Act 1994.

6.8.4.3 ***Brace, upper end connection***

The upper end of the diagonal timber brace shall be fixed to one of the following members as set out below:

(a) Braced *pile*. The bolt shall pass through the top end of the *pile* not less than 90 mm nor more than 150 mm from the top of the *pile*. The bolt shall pass through the centre line of the pile (see figure 6.6).

(b) *Bearer*. The bolt shall pass through the centre line of the *bearer* not more than 200 mm measured along the *bearer* from the centre line of the nearest support (see figure 6.7). Where required for the alignment of the brace, the gap between the *bearer* and *diagonal brace* shall be bridged by a timber packer fixed to the *bearer* with nails and a fixing having a *capacity* of 12 kN along the direction of the *bearer*. The packer shall be the same depth as the *bearer* and not less than 600 mm long.

(c) *Joist*. The bolt shall pass through the *joist,* not less than 50 mm from its lower edge and not more than 200 mm measured along the *joist,* from the centre line of the nearest *pile* (see figure 6.8). The top of the diagonal timber brace shall not be more than 150 mm horizontally out of line from the bottom of the brace (see figure 6.8).

6.8.5 *Bearer fixings to braced piles*

The *bearer* shall be fixed to each *braced pile* with either:

(a) For timber braced *piles*: An M12 bolt or;

(b) An alternative fixing with a *capacity* of:

(i) 12 kN in the horizontal direction where the brace is attached to the *pile*

(ii) 12 kN in the vertical direction where the brace is attached to the *bearer*

(iii) 12 kN in the vertical direction where the brace is attached to the *joist*.

C6.8.6

See manufacturer's data for fixings providing 6 kN, 12 kN capacities.

6.8.6 *Joist fixings to bearer (where joists are parallel to the brace)*

6.8.6.1

Where the brace is attached to the *pile*: Two floor *joists* in the area immediately above the upper end of the brace, shall be fixed to the *bearer* with fixings each having a *capacity* in the horizontal direction of the brace of 6 kN.

6.8.6.2

Where the brace is attached to the *joist*: The *joist* to *bearer* fixing shall have a *capacity* in the vertical direction of 12 kN.

Copyright Standards New Zealand

© The Crown in right of New Zealand, administered by the New Zealand Standards Executive. Access to this standard has been sponsored by the Ministry of Business, Innovation, and Employment under copyright license LN001498. You are not permitted to reproduce or distribute any part of this standard without prior written permission from Standards New Zealand, on behalf of New Zealand Standards Executive, unless your actions are covered by Part 3 of the Copyright Act 1994.

6.9 Anchor piles

6.9.1 *Height*

The height of an *anchor pile* shall be as defined in 6.4.1.1.

6.9.2 *Depth*

The minimum depth of an *anchor pile* from *cleared ground level* to the *footing* under the surface bearing against the ground shall be 900 mm.

6.9.3 *Fixings*

Amd 1 Dec '00

The fixings of *bearer* and floor *joists* to *anchor piles* shall be M12 bolts or 12 mm diameter threaded rod in the locations as illustrated (see figures 6.9 and 6.10). Alternative fixings having a *capacity* of 12 kN in tension or compression along the *bearer* and timber *joist* may be used.

6.10 Framed subfloor walls

6.10.1 *Stud walls*

Timber *stud* subfloor walls shall comply with the requirements of section 8 for timber *stud* walls within a *storey* except that:

(a) *Wall plates* shall be the same depth as the *studs* above, but not less than 50 mm thick, and continuously supported on a *foundation wall*;

(b) The *bottom plate* may be substituted by a *bearer* supported on *piles;*

(c) A double *stud* shall be provided directly beneath any *bearer* at right angles to the wall and supported by the *top plate*.

Wall plates shall be fixed to the *foundation wall* in accordance with 6.11.9.

C6.10.1

The provisions of section 8 require that subfloor stud walls must be lined or clad, or dwangs provided for lateral support of the studs.

6.10.2 *Jack studs*

6.10.2.1

Jack studs shall be of the dimensions given by table 6.3 (see table 14.5 for 3 kPa *floor loads*).

6.10.2.2

Jack studs shall be located over supporting piles and shall have their greater dimension in the line of the *bearer* supported by the *jack studs*.

6.10.2.3 ***Fixings***

Fixings of *jack studs* to *ordinary piles* shall be in accordance with 6.5.2.

Copyright Standards New Zealand

© The Crown in right of New Zealand, administered by the New Zealand Standards Executive. Access to this standard has been sponsored by the Ministry of Business, Innovation, and Employment under copyright license LN001498. You are not permitted to reproduce or distribute any part of this standard without prior written permission from Standards New Zealand, on behalf of New Zealand Standards Executive, unless your actions are covered by Part 3 of the Copyright Act 1994.

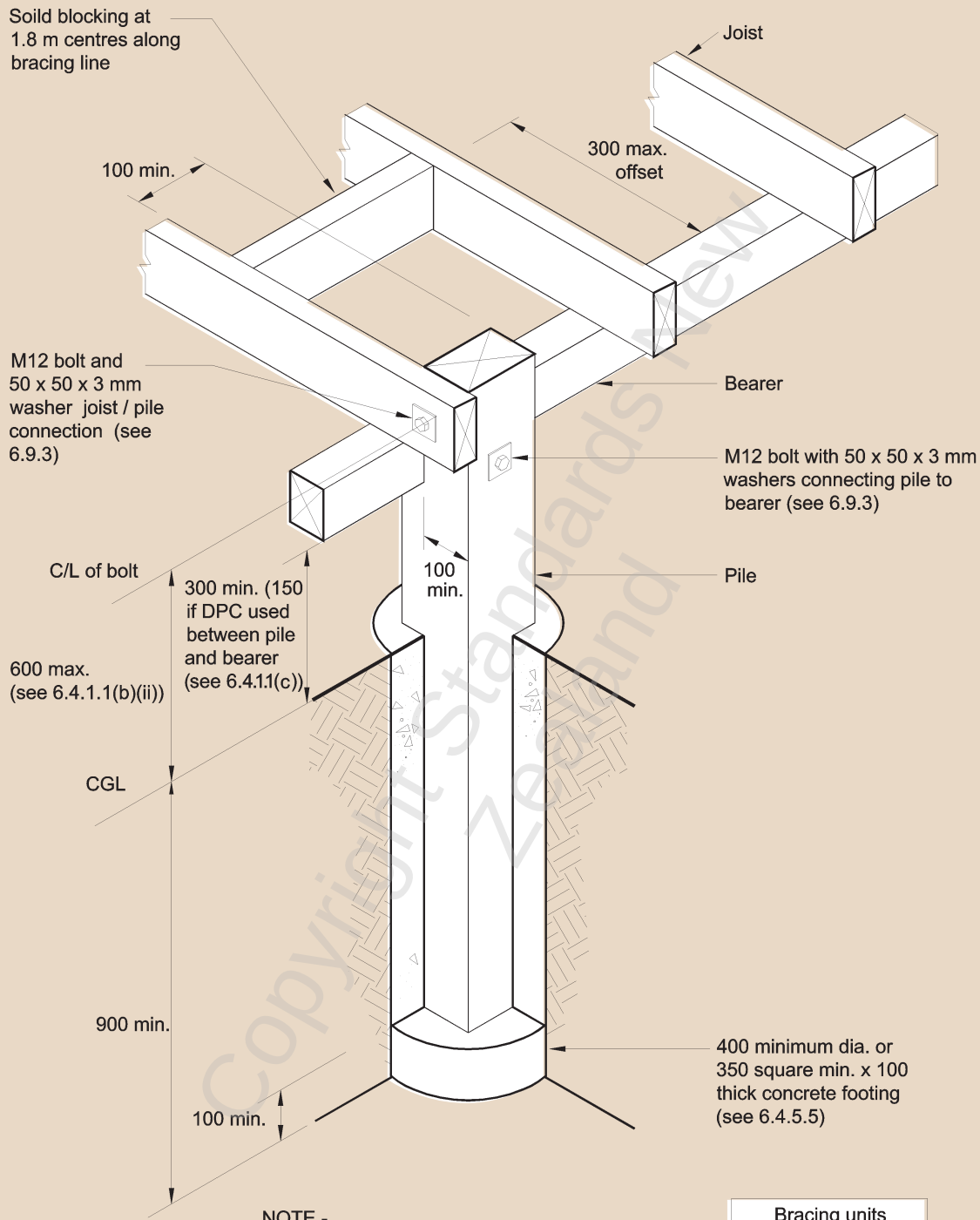

NOTE -
(1) Bearers must not be joined at an anchor pile.
(2) CGL = Cleared ground level.
(3) See section 4 for durability requirements.

Bracing units	
Wind	160
Earthquake	120

Figure 6.9 – Anchor pile directly connected to joist and bearer (see 6.9)

© The Crown in right of New Zealand, administered by the New Zealand Standards Executive. Access to this standard has been sponsored by the Ministry of Business, Innovation, and Employment under copyright license LN001498. You are not permitted to reproduce or distribute any part of this standard without prior written permission from Standards New Zealand, on behalf of New Zealand Standards Executive, unless your actions are covered by Part 3 of the Copyright Act 1994.

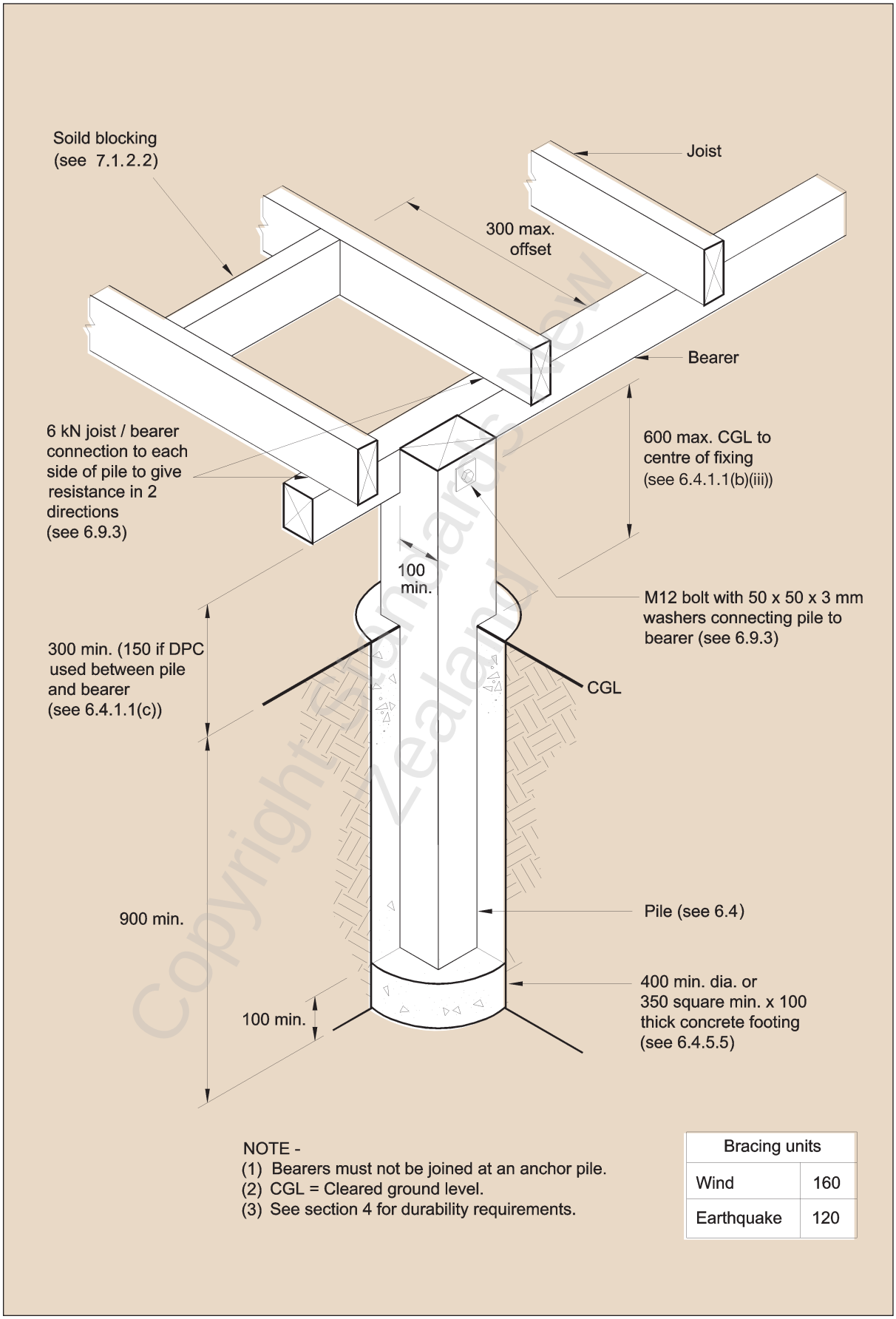

NOTE -
(1) Bearers must not be joined at an anchor pile.
(2) CGL = Cleared ground level.
(3) See section 4 for durability requirements.

Bracing units	
Wind	160
Earthquake	120

Amd 1 Dec '00

Figure 6.10 – Anchor pile directly connected to bearer only (see 6.9)

© The Crown in right of New Zealand, administered by the New Zealand Standards Executive. Access to this standard has been sponsored by the Ministry of Business, Innovation, and Employment under copyright license LN001498. You are not permitted to reproduce or distribute any part of this standard without prior written permission from Standards New Zealand, on behalf of New Zealand Standards Executive, unless your actions are covered by Part 3 of the Copyright Act 1994.

Table 6.3 – Subfloor jack studs (see 6.10.2.1) **– No. 1 Framing and MSG 6**

1.5 kPa and 2 kPa floor load floor load

Maximum span of bearers (m)	Jack stud size (mm x mm)	Maximum jack stud height for loaded dimension of bearer:		
		2.0 (m)	**3.5** (m)	**5.0** (m)
Supporting 1 storey				
1.30	90 x 70 90 x 90	1.8 2.7	1.8 2.6	1.7 2.5
1.65	90 x 70 90 x 90	1.6 2.4	1.6 2.3	1.4 2.2
2.00	90 x 70 90 x 90	1.4 2.1	1.4 2.1	1.3 1.9
Supporting 2 storeys				
1.30	90 x 70 90 x 90	1.6 2.4	1.5 2.2	1.3 2.0
1.65	90 x 70 90 x 90	1.4 2.1	1.2 1.9	1.0 1.7
2.00	90 x 70 90 x 90	1.2 1.9	1.0 1.7	– 1.4
Supporting 3 storeys				
1.30	90 x 70 90 x 90	1.5 2.2	1.2 1.9	0.9 1.7
1.65	90 x 70 90 x 90	1.2 1.9	0.9 1.6	– 1.3
2.00	90 x 70 90 x 90	1.0 1.7	– 1.3	– –

* For definition of loaded dimension see 1.3.

NOTE – Substitution with built-up members is not allowed.

Amd 2
May '06

Copyright Standards New Zealand

© The Crown in right of New Zealand, administered by the New Zealand Standards Executive. Access to this standard has been sponsored by the Ministry of Business, Innovation, and Employment under copyright license LN001498. You are not permitted to reproduce or distribute any part of this standard without prior written permission from Standards New Zealand, on behalf of New Zealand Standards Executive, unless your actions are covered by Part 3 of the Copyright Act 1994.

Table 6.3 – Subfloor jack studs (see 6.10.2.1) **– VSG 8 and MSG 8**

1.5 kPa and 2 kPa floor load floor load

Maximum span of bearers (m)	Jack stud size (mm x mm)	Maximum jack stud height for loaded dimension of bearer:		
		2.0 (m)	**3.5** (m)	**5.0** (m)
Supporting 1 storey				
1.30	90 x 70 90 x 90	2.0 3.0	2.0 2.9	1.8 2.7
1.65	90 x 70 90 x 90	1.8 2.6	1.7 2.5	1.6 2.4
2.00	90 x 70 90 x 90	1.6 2.4	1.5 2.3	1.4 2.2
Supporting 2 storeys				
1.30	90 x 70 90 x 90	1.8 2.7	1.6 2.4	1.5 2.2
1.65	90 x 70 90 x 90	1.6 2.4	1.4 2.1	1.2 1.9
2.00	90 x 70 90 x 90	1.4 2.1	1.2 1.9	1.0 1.7
Supporting 3 storeys				
1.30	90 x 70 90 x 90	1.6 2.4	1.4 2.1	1.2 1.9
1.65	90 x 70 90 x 90	1.4 2.1	1.2 1.8	0.8 1.6
2.00	90 x 70 90 x 90	1.2 1.9	0.8 1.6	– 1.2

* For definition of loaded dimension see 1.3.

NOTE – Substitution with built-up members is not allowed.

Amd 2
May '06

Copyright Standards New Zealand

© The Crown in right of New Zealand, administered by the New Zealand Standards Executive. Access to this standard has been sponsored by the Ministry of Business, Innovation, and Employment under copyright license LN001498. You are not permitted to reproduce or distribute any part of this standard without prior written permission from Standards New Zealand, on behalf of New Zealand Standards Executive, unless your actions are covered by Part 3 of the Copyright Act 1994.

Table 6.3 – Subfloor jack studs (see 6.10.2.1) **– VSG 10 and MSG 10**

1.5 kPa and 2 kPa floor load floor load

Maximum span of bearers (m)	Jack stud size (mm x mm)	Maximum jack stud height for loaded dimension of bearer:		
		2.0 (m)	**3.5** (m)	**5.0** (m)
Supporting 1 storey				
1.30	90 X 70 90 x 90	2.1 3.1	2.1 3.0	1.9 2.9
1.65	90 x 70 90 x 90	1.9 2.8	1.8 2.7	1.7 2.5
2.00	90 x 70 90 x 90	1.7 2.5	1.6 2.4	1.5 2.3
Supporting 2 storeys				
1.30	90 x 70 90 x 90	1.9 2.8	1.7 2.6	1.6 2.3
1.65	90 x 70 90 x 90	1.7 2.5	1.5 2.3	1.4 2.0
2.00	90 x 70 90 x 90	1.5 2.3	1.3 2.0	1.1 1.8
Supporting 3 storeys				
1.30	90 x 70 90 x 90	1.7 2.6	1.5 2.2	1.4 2.1
1.65	90 x 70 90 x 90	1.5 2.3	1.3 2.0	1.1 1.8
2.00	90 x 70 90 x 90	1.3 2.0	1.0 1.7	– 1.4

* For definition of loaded dimension see 1.3.

NOTE – Substitution with built-up members is not allowed.

Amd 2
May '06

Copyright Standards New Zealand

© The Crown in right of New Zealand, administered by the New Zealand Standards Executive. Access to this standard has been sponsored by the Ministry of Business, Innovation, and Employment under copyright license LN001498. You are not permitted to reproduce or distribute any part of this standard without prior written permission from Standards New Zealand, on behalf of New Zealand Standards Executive, unless your actions are covered by Part 3 of the Copyright Act 1994.

6.11 Foundation walls (concrete and concrete masonry)

6.11.1 *General*

6.11.1.1
The *foundation wall* provisions of this Standard shall apply only to *foundation walls* that are retaining not more than 300 mm of soil or fill.

C6.11.1.1
It will be necessary for any foundation wall that is a retaining wall to be the subject of specific design or to the provisions of NZS 4229.

6.11.1.2
Foundation walls shall be of reinforced concrete or of reinforced concrete masonry, constructed using *running* or *stretcher bond*.

6.11.1.3
Openings not exceeding 2.8 m wide may occur in *foundation walls*, provided that:

(a) No opening shall occur beneath the end support of a *bearer*;

(b) The *footing* shall be continuous beneath all openings;

(c) Any opening more than 600 mm wide shall be at least 600 mm clear of any wall end, or corner, or another opening;

(d) *Lintels* to support *joists* above openings shall be of timber as given by tables 8.10 to 8.12, 14.12 to 14.14, and 15.3 to 15.5. Openings not exceeding 900 mm wide and not less than 150 mm clear of the top of the *foundation wall* do not require a *lintel*;

(e) Reinforcing around openings shall comply with 6.11.7.3.

6.11.1.4
The top surface finish of a *foundation wall* shall provide continuous bearing for timber members.

6.11.1.5
Where *heavy wall claddings* are fixed to the lower *storey* as permitted by 11.7.1, a reinforced concrete or concrete masonry *foundation wall* complying with NZS 3109 or NZS 4229 shall be provided up to the *plate* fixed to the floor *joists*.

6.11.2 *Height of foundation walls*

6.11.2.1
The height of the *foundation wall* shall be at least 225 mm above *finished ground level* (as shown in figure 6.11) and not more than 2.0 m above the bottom of its *footing* except at steps in *footings* where the height may be up to 2.6 m for a length of up to 1.5 m (see figure 6.12).

6.11.2.2
Foundation walls may be stepped to accommodate variations in *cleared ground level* or to suit the subfloor *framing*. When both the top and bottom surfaces are stepped, then the steppings shall be overlapped both vertically and horizontally not less than 450 mm as shown in figure 6.12.

Copyright Standards New Zealand

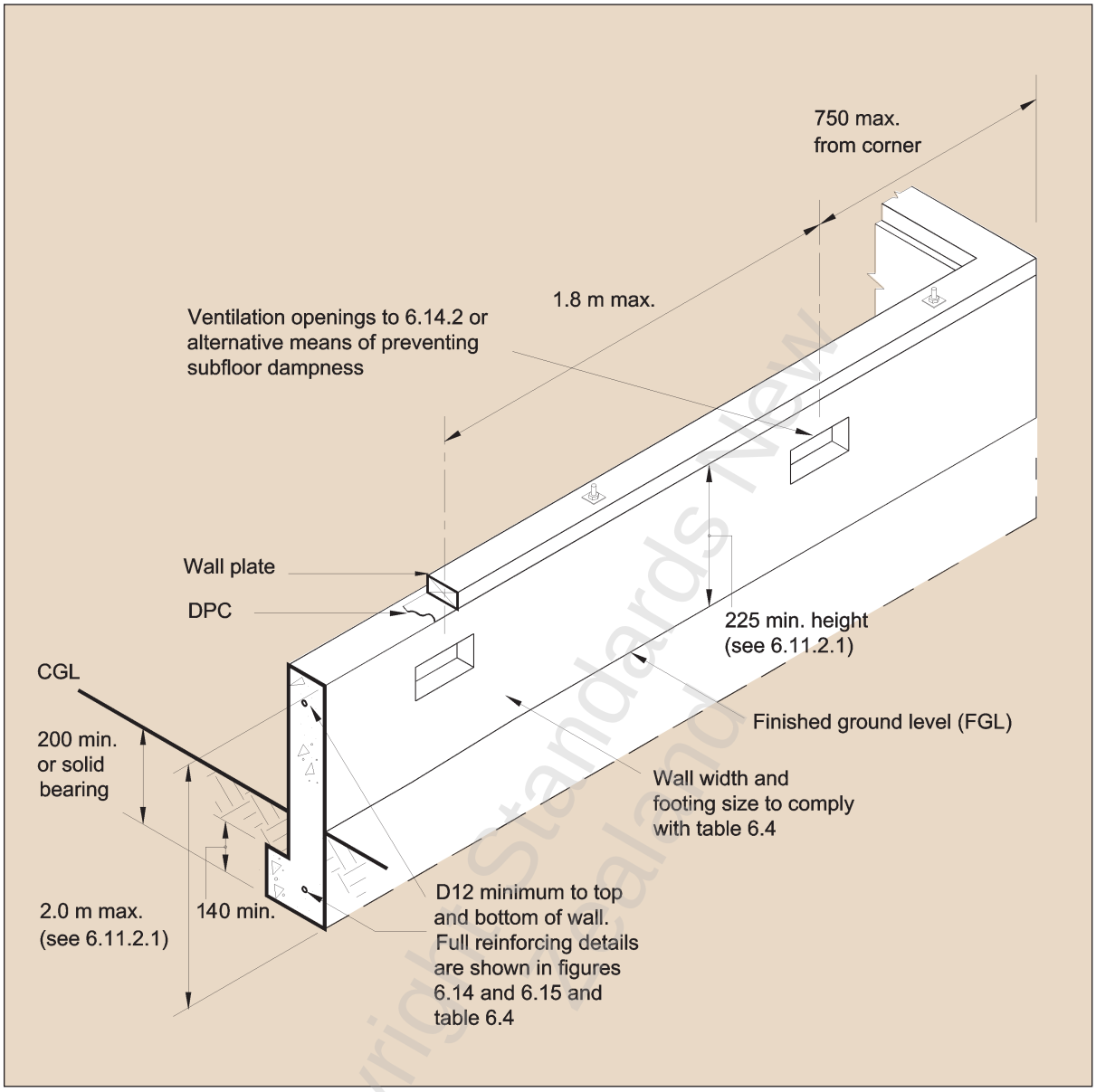

Amd 1
Dec '00

Figure 6.11 – Foundation walls (see 6.11.2.1)

6.11.2.3
Reinforced concrete walls up to 2 m high may be used provided they comply with all the provisions of solid fill concrete masonry walls of the same thickness as set out in NZS 4229. Wall *reinforcements* shall not be less than shown in figures 6.13 to 6.15.

6.11.3 *Width of foundation walls*

The width of a *foundation wall* shall be not less than as shown in table 6.4. Where the sides of a *foundation wall* are cast against earth, the thickness shall be increased so that there is a minimum cover of 75 mm to the *reinforcement*.

© The Crown in right of New Zealand, administered by the New Zealand Standards Executive. Access to this standard has been sponsored by the Ministry of Business, Innovation, and Employment under copyright license LN001498. You are not permitted to reproduce or distribute any part of this standard without prior written permission from Standards New Zealand, on behalf of New Zealand Standards Executive, unless your actions are covered by Part 3 of the Copyright Act 1994.

© The Crown in right of New Zealand, administered by the New Zealand Standards Executive. Access to this standard has been sponsored by the Ministry of Business, Innovation, and Employment under copyright license LN001498. You are not permitted to reproduce or distribute any part of this standard without prior written permission from Standards New Zealand, on behalf of New Zealand Standards Executive, unless your actions are covered by Part 3 of the Copyright Act 1994.

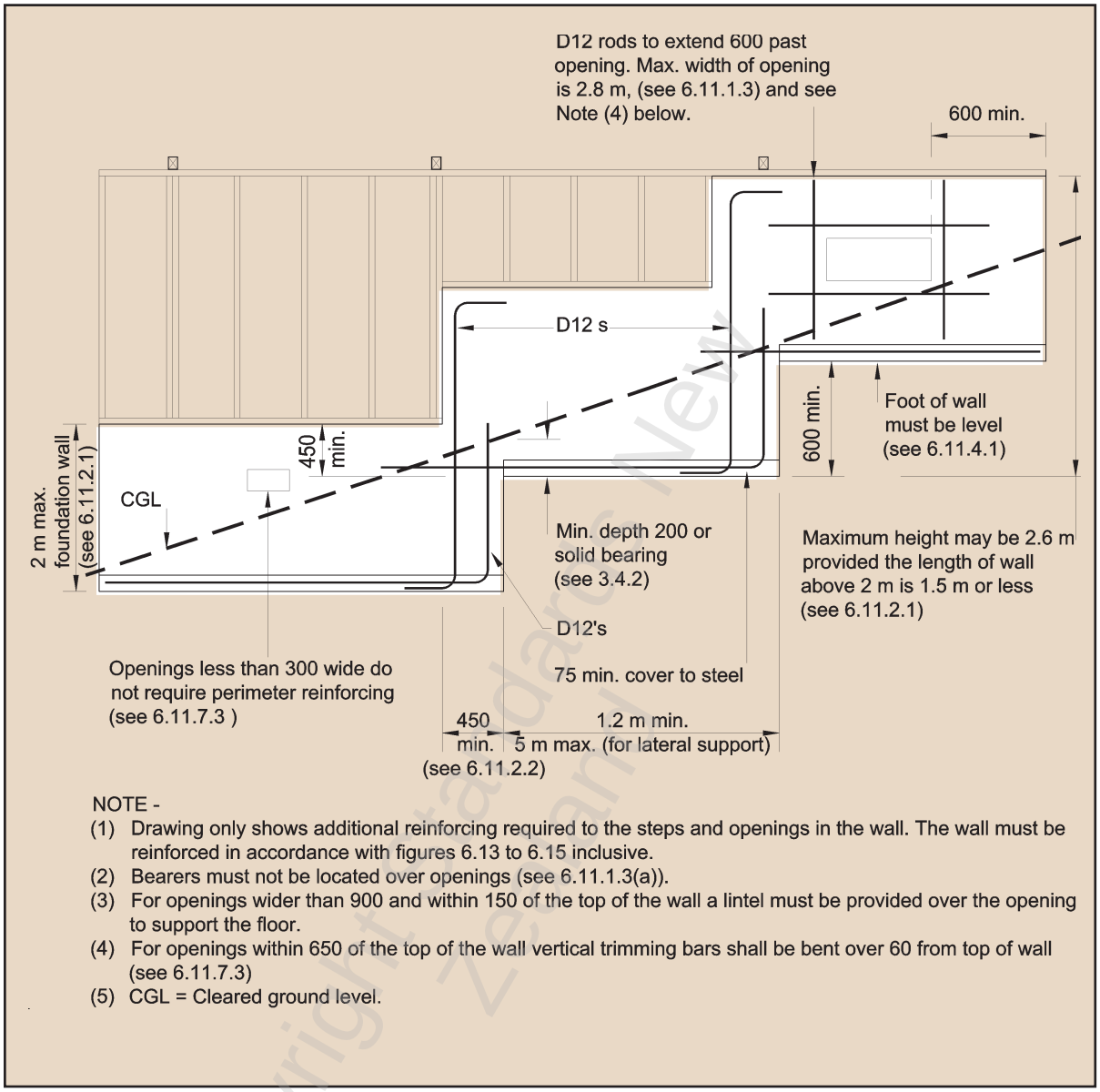

NOTE -
(1) Drawing only shows additional reinforcing required to the steps and openings in the wall. The wall must be reinforced in accordance with figures 6.13 to 6.15 inclusive.
(2) Bearers must not be located over openings (see 6.11.1.3(a)).
(3) For openings wider than 900 and within 150 of the top of the wall a lintel must be provided over the opening to support the floor.
(4) For openings within 650 of the top of the wall vertical trimming bars shall be bent over 60 from top of wall (see 6.11.7.3)
(5) CGL = Cleared ground level.

Figure 6.12 – Foundation walls – Openings and steps (see 6.11.2.2)

6.11.4 *Foundation wall footings*

6.11.4.1
All soil bearing surfaces of *foundation wall footings* shall be horizontal and may be stepped to accommodate variations in *cleared ground level*. The soil bearing depths of *footings* shall be in accordance with 3.4.2.

6.11.4.2
Foundation wall footings shall be as follows:

(a) *Cantilevered foundation walls*: As shown in figure 6.13;

(b) For all other *foundation walls* as set out in table 6.4: Where more than one longitudinal bar is required in table 6.4, lateral reinforcing consisting of R6 ties at not more than 600 mm centres shall be provided.

© The Crown in right of New Zealand, administered by the New Zealand Standards Executive. Access to this standard has been sponsored by the Ministry of Business, Innovation, and Employment under copyright license LN001498. You are not permitted to reproduce or distribute any part of this standard without prior written permission from Standards New Zealand, on behalf of New Zealand Standards Executive, unless your actions are covered by Part 3 of the Copyright Act 1994.

6.11.4.3
Reinforced concrete masonry *foundation wall footings* shall be laid on level blinding concrete not less than 60 mm thick.

6.11.5 *Lateral support for foundation walls*

Foundation walls shall be laterally supported by one of the following systems:

(a) Direct connection to the underside of the *plate* or *bearer* supporting floor *joists*;

(b) A *cantilever foundation wall footing* in accordance with figure 6.13;

(c) A stepped *footing,* not less than 600 mm high, where the length of wall on the lower side of the step is not less than 1.2 m (see figure 6.12). Steps shall be at no more than 5 m *spacing* along the line of the wall.

6.11.6 *Foundation wall materials*

6.11.6.1
Concrete shall be ordinary grade concrete to a minimum specified compressive strength of 17.5 MPa at 28 days standard cured, as specified in NZS 3109 and NZS 3124, provided the requirements of 4.8.2 are met. The fine and coarse aggregates need not be supplied and batched separately except where a higher compressive strength is required for durability by 4.8.

6.11.6.2
Concrete masonry materials and workmanship shall comply with NZS 4210.

Copyright Standards New Zealand

Table 6.4 – Cross section dimensions of foundation wall footings not supporting masonry veneer (see 6.11.4.2(b))

Wall supporting	Concrete				Concrete masonry			
		Footing				Footing		
	Wall width	Width	Depth	Min no. of longitudinal D12 bars in footing	Wall width	Width	Depth	Min no. of longitudinal D12 bars in footing
	(mm)	(mm)	(mm)		(mm)	(mm)	(mm)	
Single storey	130	165	140	1	140	190	140	2
2 or more storeys	150	200	140	2	190	240	140	2

NOTE – A foundation wall footing supporting masonry veneer shall be not less than 240 mm wide with 2-D12 bars.

Amd 1 Dec '00

© The Crown in right of New Zealand, administered by the New Zealand Standards Executive. Access to this standard has been sponsored by the Ministry of Business, Innovation, and Employment under copyright license LN001498. You are not permitted to reproduce or distribute any part of this standard without prior written permission from Standards New Zealand, on behalf of New Zealand Standards Executive, unless your actions are covered by Part 3 of the Copyright Act 1994.

6.11.7 *Foundation wall reinforcement*

6.11.7.1
Foundation walls shall be reinforced as shown in figures 6.13, 6.14 and 6.15.

6.11.7.2
Bars shall be lapped where necessary with a lap length not less than that shown in table 6.5.

Table 6.5 – Minimum lap or anchorage lengths for reinforcing bars

Bar type	Material	
	Concrete	Concrete masonry
Deformed	30 diameters	50 diameters
Plain round (with hooks)	40 diameters	60 diameters
Plain round (no hooks)	60 diameters	100 diameters

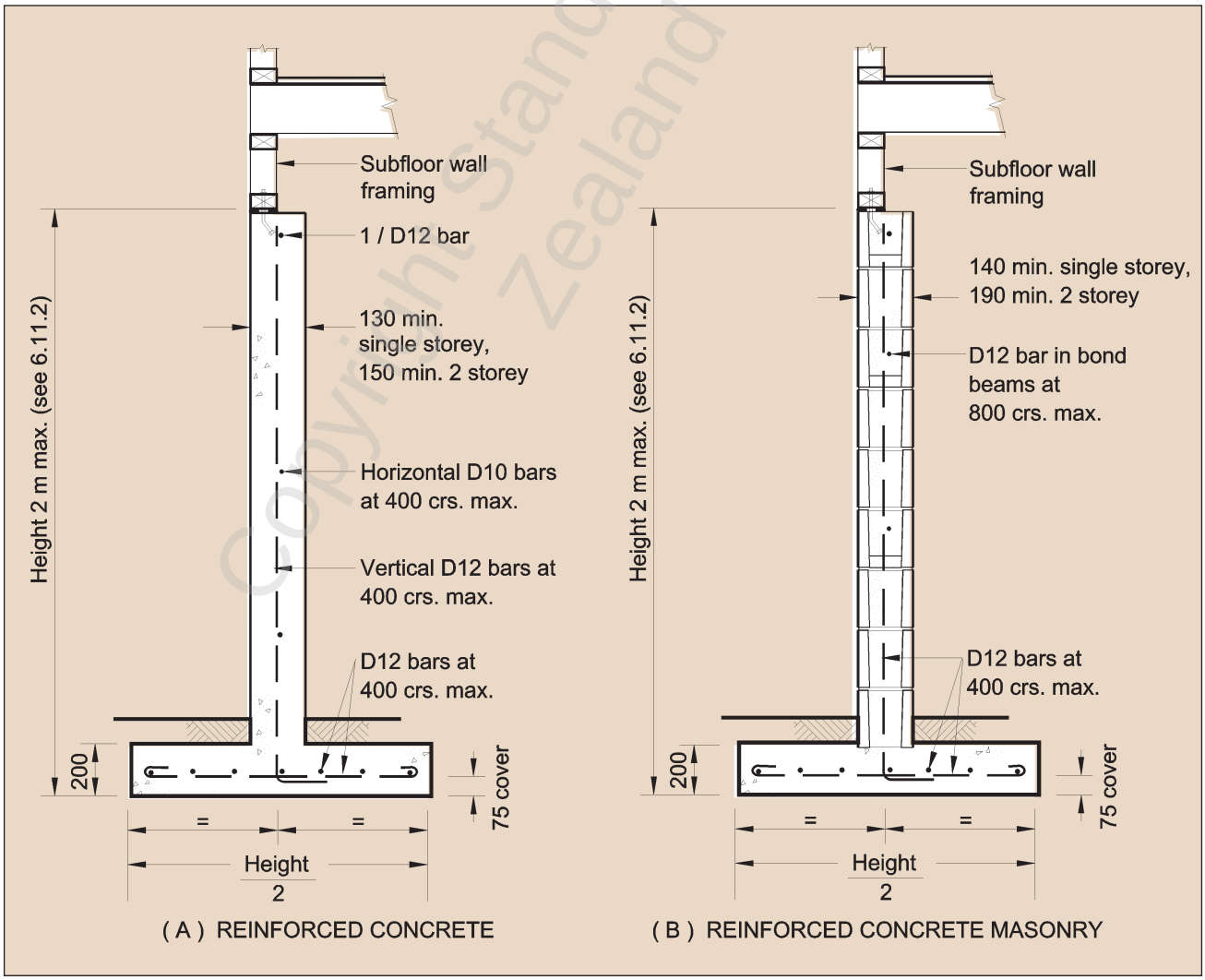

Figure 6.13 – Cantilevered foundation walls (see 6.11.4.2)

© The Crown in right of New Zealand, administered by the New Zealand Standards Executive. Access to this standard has been sponsored by the Ministry of Business, Innovation, and Employment under copyright license LN001498. You are not permitted to reproduce or distribute any part of this standard without prior written permission from Standards New Zealand, on behalf of New Zealand Standards Executive, unless your actions are covered by Part 3 of the Copyright Act 1994.

6.11.7.3
An opening in a *foundation wall* exceeding 300 mm in any direction shall be provided with one D12 trimming bar on every side and extending not less than 600 mm past each corner of the opening. Where a *lintel* is less than 650 mm deep, the jamb trimming bars shall be bent near their tops at 60 mm from the top of the concrete.

6.11.7.4
Where either the top or the *footing* of a *foundation wall* is stepped, additional *reinforcement* shall be provided as shown in figure 6.12.

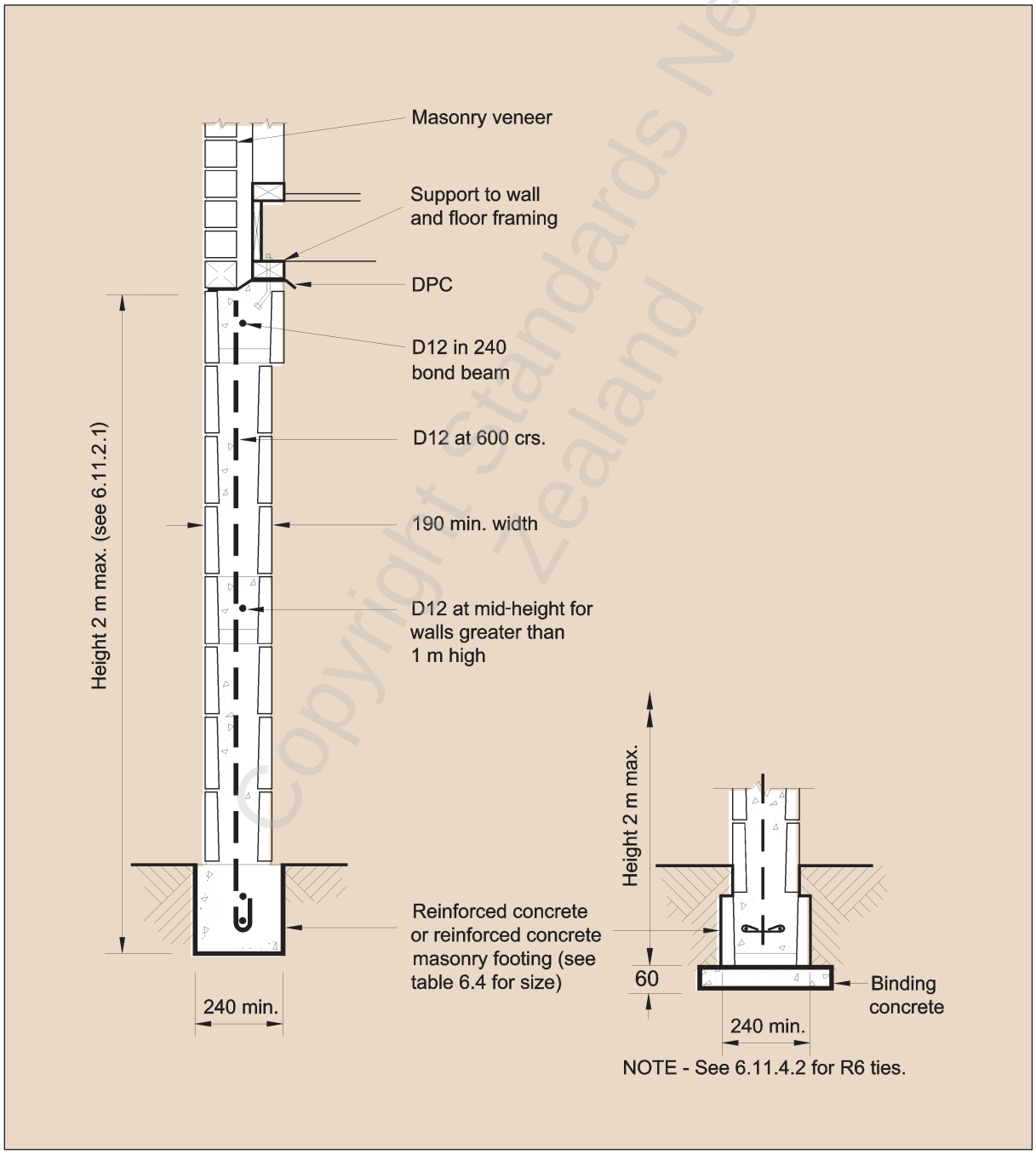

Figure 6.14 – Reinforced concrete masonry foundation walls (not cantilevered) supporting masonry veneer (see 6.11.7.1)

© The Crown in right of New Zealand, administered by the New Zealand Standards Executive. Access to this standard has been sponsored by the Ministry of Business, Innovation, and Employment under copyright license LN001498. You are not permitted to reproduce or distribute any part of this standard without prior written permission from Standards New Zealand, on behalf of New Zealand Standards Executive, unless your actions are covered by Part 3 of the Copyright Act 1994.

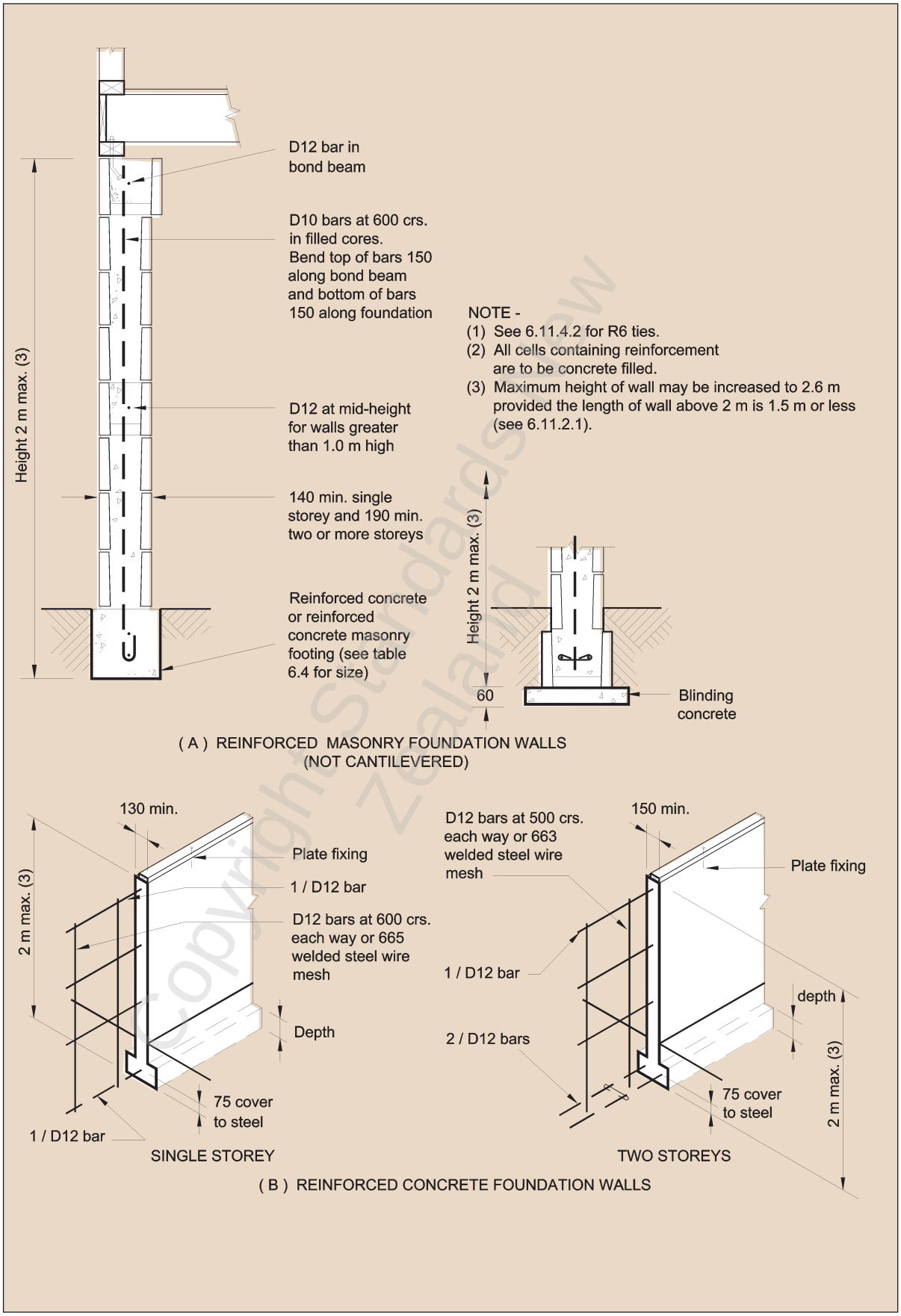

Figure 6.15 – Reinforced masonry and reinforced concrete masonry foundation walls (not cantilevered) (see 6.11.7.1)

Amd 1 Dec '00

Amd 1 Dec '00

© The Crown in right of New Zealand, administered by the New Zealand Standards Executive. Access to this standard has been sponsored by the Ministry of Business, Innovation, and Employment under copyright license LN001498. You are not permitted to reproduce or distribute any part of this standard without prior written permission from Standards New Zealand, on behalf of New Zealand Standards Executive, unless your actions are covered by Part 3 of the Copyright Act 1994.

6.11.8 *Subfloor bracing using foundation walls*

Foundation walls may be used as a subfloor *bracing element* provided that the wall length being considered does not have an opening exceeding 600 mm wide. *Bracing capacity ratings* are set out in table 5.11. These walls must be 1.5 m and over in length, and be connected to the *plate* supporting the floor *joists,* or the *wall plate* of a braced subfloor timber frame.

6.11.9 *Fixing of wall plates to foundation walls*

6.11.9.1

Wall plates shall be fixed to *foundation walls* by either:

(a) M12 bolts set not less than 75 mm into the concrete and projecting sufficiently to allow for a washer and a fully-threaded nut above the timber as shown in figure 6.16; or

(b) R10 steel dowels bent at least 90°, set not less than 75 mm into the concrete and projecting sufficiently to allow for not less than a 75 mm length of the dowel to be clinched over the timber as shown in figure 6.16.

Fixings shall be located not more than 300 mm from the end of the timber at corners of *foundation walls* and not more than 1.4 m centres along the wall for M12 bolts and 900 mm centres for R10 dowels, provided that where any length of *foundation wall* is regarded as one or more subfloor braces, each length of plate shall be fixed to it with not less than 2/M12 bolts.

6.11.9.2

On *external walls* the *wall plate* shall overhang the *foundation wall* by 6 mm (see figure 6.16). Amd 1 Dec '00

6.12 Bearers

Bearers of solid or nailed laminated timber shall be continuous over 2 or more spans and be laid in straight lines on edge.

6.12.1

Bearers directly supported by a *foundation wall* perpendicular to them shall be secured against lateral movement by one of the following methods (see figure 6.17):

(a) For *bearer spacings* not exceeding 2 m: Each *bearer* shall be bolted to the *foundation wall* with an M12 bolt set not less than 150 mm into the wall and located centrally on the *bearer* and the wall;

(b) For *bearer spacings* exceeding 2 m:

(i) Fixings as in (a), in conjunction with full depth *blocking* neatly cut between adjacent *bearers*. *Blocking* shall be fixed to the top of the *foundation wall* with a minimum of 2 fixings for each length of *blocking* (see figure 6.17(B)); or

(ii) Each *bearer* shall be set in a rebate in the top of the *foundation wall* to a depth 50 mm less than the depth of the *bearer,* and a 90 mm x 45 mm *wall plate* neatly cut between adjacent *bearers* shall be fixed to the top of the *foundation wall*, with a minimum of 2 fixings for each length of *wall plate* (see figure 6.17(C)); or

Copyright Standards New Zealand

© The Crown in right of New Zealand, administered by the New Zealand Standards Executive. Access to this standard has been sponsored by the Ministry of Business, Innovation, and Employment under copyright license LN001498. You are not permitted to reproduce or distribute any part of this standard without prior written permission from Standards New Zealand, on behalf of New Zealand Standards Executive, unless your actions are covered by Part 3 of the Copyright Act 1994.

(iii) Each *bearer* shall be supported by a pier not less than 150 mm x 150 mm cast integrally with the *foundation wall* and extending from the *foundation wall footing* to a height such that the top of the *bearer* is level with the top of the *wall plate*. The *bearer* shall be fixed to the pier with an M12 bolt set not less than 150 mm into the pier (see figure 6.17(D)).

(c) The end of a *bearer* which lands on a *foundation wall* running in the line of the *bearer* shall be fixed to the *foundation wall* by an M12 bolt, set not less than 50 mm from the edge of the wall, and not less than 100 mm from the end of the *bearer* as shown in figure 6.18.

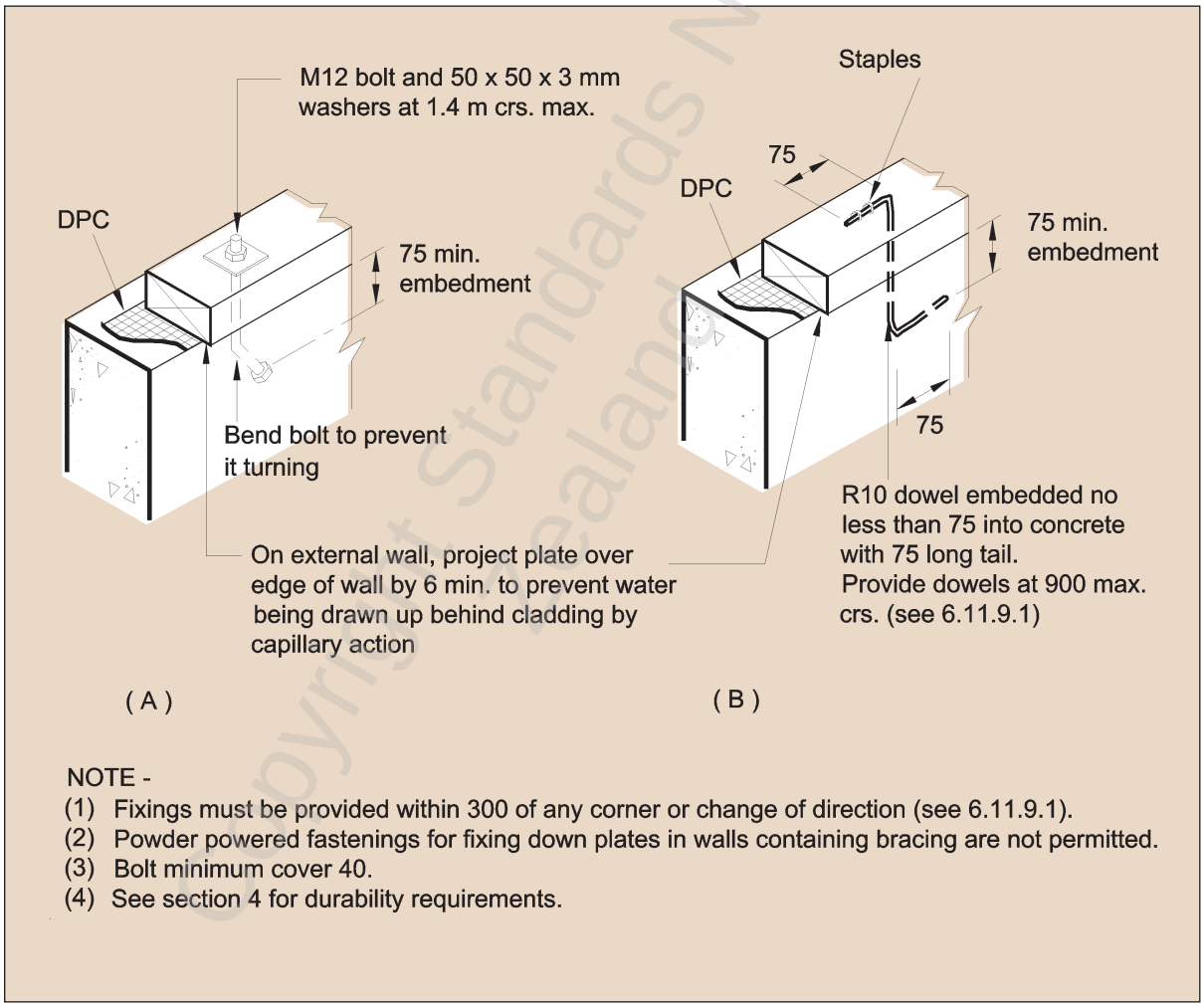

Figure 6.16 – Fixing of wall plates to foundation walls (see 6.11.9)

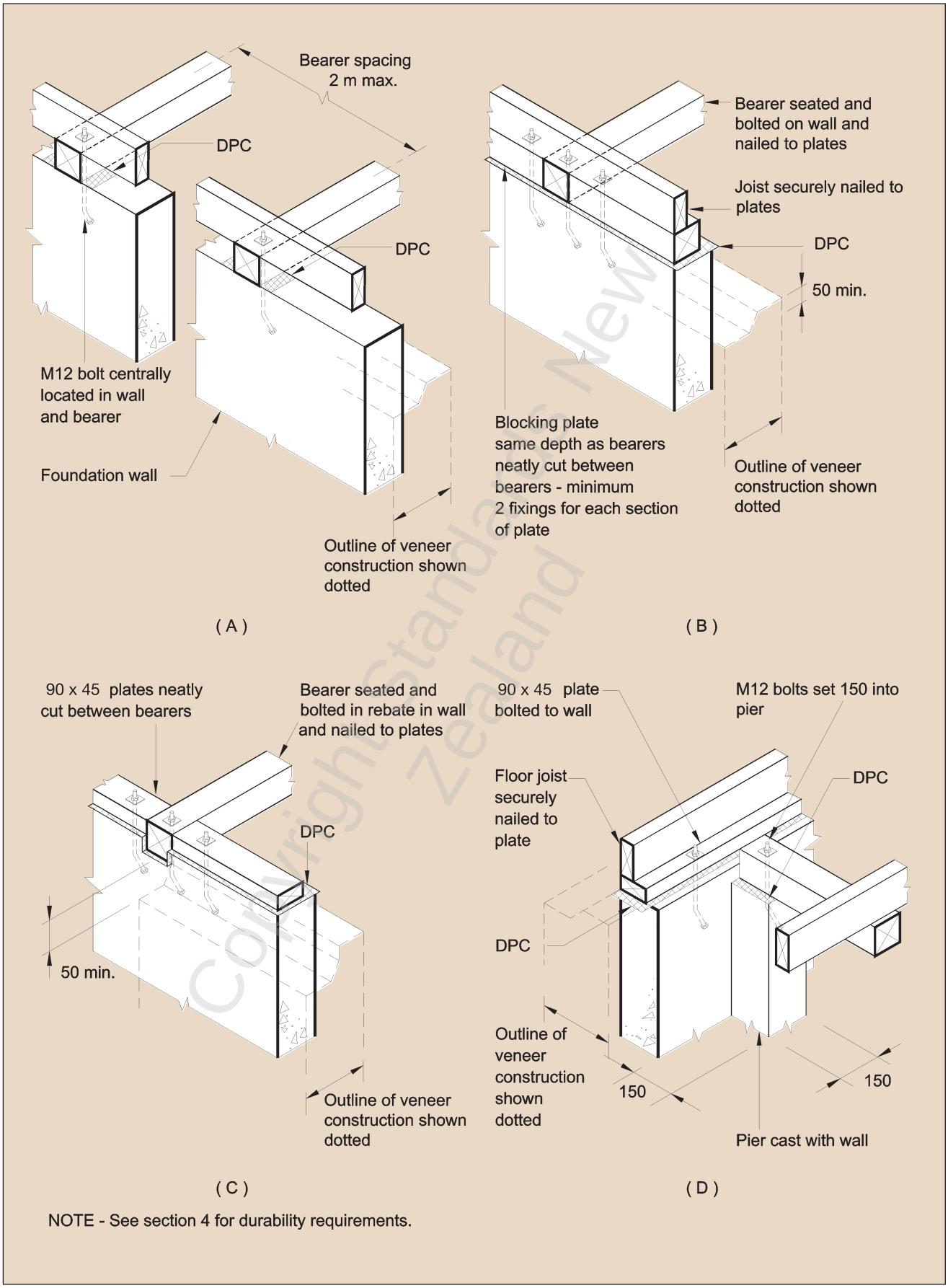

Figure 6.17 – Fixing of bearers perpendicular to foundation walls (see 6.12.1)

© The Crown in right of New Zealand, administered by the New Zealand Standards Executive. Access to this standard has been sponsored by the Ministry of Business, Innovation, and Employment under copyright license LN001498. You are not permitted to reproduce or distribute any part of this standard without prior written permission from Standards New Zealand, on behalf of New Zealand Standards Executive, unless your actions are covered by Part 3 of the Copyright Act 1994.

© The Crown in right of New Zealand, administered by the New Zealand Standards Executive. Access to this standard has been sponsored by the Ministry of Business, Innovation, and Employment under copyright license LN001498. You are not permitted to reproduce or distribute any part of this standard without prior written permission from Standards New Zealand, on behalf of New Zealand Standards Executive, unless your actions are covered by Part 3 of the Copyright Act 1994.

Amd 2
May '06

6.12.2 *Sizes*

6.12.2.1
Bearers shall be of the dimensions given in tables 6.6 (1.5 kPa and 2 kPa *floor loads*) and 14.4 (3 kPa *floor loads*) except as provided by 6.12.2.2 and 6.12.4. The 1.5 kPa and 3 kPa *bearer* tables are for internal situations (i.e. where the timber will remain dry) and the 2 kPa tables for external situations (i.e. for *decks* where the timber will be exposed to wetting).

6.12.2.2
Where a *bearer* in a single *storey* building runs parallel to, and not more than 200 mm away from a *loadbearing wall* supporting a *heavy roof,* of *loaded dimension* greater than 4.0 m, its size shall be as given in table 6.6, but the *loaded dimension* of the *bearer* shall not be taken as less than 2.7 m.

6.12.3 *Built-up bearers*

Bearers may be built-up as specified in 2.4.4.7, provided that where a dowel or bolt fixing passes through the depth of such a *bearer* then an M12 bolt shall be located within 50 mm of that fixing, to tie the laminations together.

6.12.4 *Cantilevered bearers*

Bearers may project as cantilevers beyond the face of the support to a distance not exceeding:

(a) *Bearers* at *spacings* not exceeding 2 m: 300 mm;

(b) *Bearers* at *spacings* exceeding 2 m: 200 mm.

Cantilevered *bearers* shall support not more than one floor, and an *external wall* and roof.

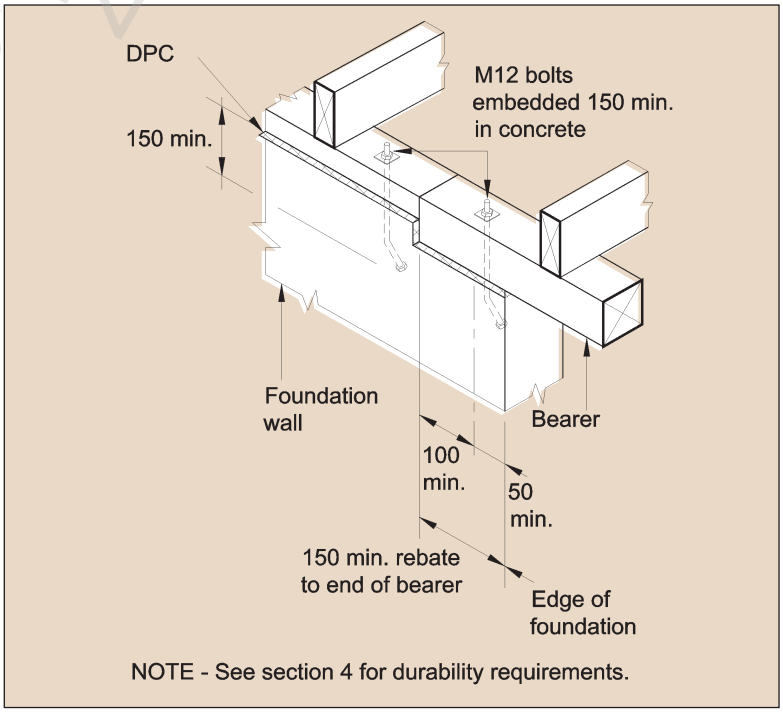

Figure 6.18 – Fixing of bearers in line with foundation walls
(see 6.12.1(c))

Copyright Standards New Zealand

© The Crown in right of New Zealand, administered by the New Zealand Standards Executive. Access to this standard has been sponsored by the Ministry of Business, Innovation, and Employment under copyright license LN001498. You are not permitted to reproduce or distribute any part of this standard without prior written permission from Standards New Zealand, on behalf of New Zealand Standards Executive, unless your actions are covered by Part 3 of the Copyright Act 1994.

Table 6.6 – Bearers (see 6.12.2.1) **– No. 1 Framing and MSG 6**

Maximum span of bearer continuous over 2 or more spans	Loaded dimension* of bearer	Bearer size (Width x thickness)
(m)	(m)	(mm x mm)
A 1.5 kPa floor load (dry in service)		
1.30	1.30	90 x 90
	2.45	140 x 70
	3.15	140 x 90
	4.50	190 x 70
1.65	1.50	140 x 70
	1.95	140 x 90
	2.80	190 x 70
2.00	1.00	140 x 70
	1.30	140 x 90
	1.90	190 x 70
B 2.0 kPa floor load (wetted in service)		
1.30	1.00	90 x 90
	1.40	140 x 70
	1.85	140 x 90
	2.60	190 x 70
1.65	1.60	190 x 70

* For definition of loaded dimension see 1.3.

NOTE – Members 70 mm and 90 mm thick may be substituted with built-up members sized and nailed in accordance with 2.4.4.7.

Amd 2 May '06

Copyright Standards New Zealand

© The Crown in right of New Zealand, administered by the New Zealand Standards Executive. Access to this standard has been sponsored by the Ministry of Business, Innovation, and Employment under copyright license LN001498. You are not permitted to reproduce or distribute any part of this standard without prior written permission from Standards New Zealand, on behalf of New Zealand Standards Executive, unless your actions are covered by Part 3 of the Copyright Act 1994.

Amd 2
May '06

Table 6.6 – Bearers (see 6.12.2.1) **– VSG 8, MSG 8 and G 8**

Maximum span of bearer continuous over 2 or more spans	Loaded dimension* of bearer	Bearer size (Width x thickness)
(m)	(m)	(mm x mm)
A 1.5 kPa floor load VSG 8 and MSG 8 (dry in service)		
1.30	1.40	90 x 70
	1.80	90 x 90
	3.40	140 x 70
	4.40	140 x 90
	6.30	190 x 70
1.65	2.10	140 x 70
	2.70	140 x 90
	3.90	190 x 70
2.00	1.45	140 x 70
	1.85	140 x 90
	2.65	190 x 70
B 2.0 kPa floor load VSG 8, MSG 8 and G 8 (wetted in service)		
1.30	1.40	90 x 90
	2.20	140 x 70
	2.85	140 x 90
	4.10	190 x 70
1.65	0.80	90 x 90
	1.35	140 x 70
	1.75	140 x 90
	2.55	190 x 70
2.00	1.20	140 x 90

* For definition of loaded dimension see 1.3.

NOTE – Members 70 mm and 90 mm thick may be substituted with built-up members sized and nailed in accordance with 2.4.4.7.

Copyright Standards New Zealand

© The Crown in right of New Zealand, administered by the New Zealand Standards Executive. Access to this standard has been sponsored by the Ministry of Business, Innovation, and Employment under copyright license LN001498. You are not permitted to reproduce or distribute any part of this standard without prior written permission from Standards New Zealand, on behalf of New Zealand Standards Executive, unless your actions are covered by Part 3 of the Copyright Act 1994.

Table 6.6 – Bearers (see 6.12.2.1) **– MSG 10 and VSG 10**

Maximum span of bearer continuous over 2 or more spans	Loaded dimension* of bearer	Bearer size (Width x thickness)
(m)	(m)	(mm x mm)
A 1.5 kPa floor load (dry in service)		
1.30	2.00	90 x 70
	2.60	90 x 90
	4.90	140 x 70
1.65	1.60	90 x 90
	3.05	140 x 70
	3.90	140 x 90
	5.60	190 x 70
2.00	2.05	140 x 70
	2.62	140 x 90
	3.80	190 x 70
B 2.0 kPa floor load (wetted in service)		
1.30	1.40	90 x 90
	2.20	140 x 70
	2.85	140 x 90
	4.10	190 x 70
1.65	0.80	90 x 90
	1.35	140 x 70
	1.75	140 x 90
	2.55	190 x 70
2.00	1.20	140 x 90

* For definition of loaded dimension see 1.3.

NOTE – Members 70 mm and 90 mm thick may be substituted with built-up members sized and nailed in accordance with 2.4.4.7.

Amd 2
May '06

Copyright Standards New Zealand

© The Crown in right of New Zealand, administered by the New Zealand Standards Executive. Access to this standard has been sponsored by the Ministry of Business, Innovation, and Employment under copyright license LN001498. You are not permitted to reproduce or distribute any part of this standard without prior written permission from Standards New Zealand, on behalf of New Zealand Standards Executive, unless your actions are covered by Part 3 of the Copyright Act 1994.

C6.12.6
Packing beneath bearers should be avoided if possible.

6.12.5 *Crook*

Bearers shall be laid so that any crook in them will straighten under *load*.

6.12.6 *Landing*

Bearers shall have a minimum landing on their supports of:

(a) Where *bearers* are butted over the support: 45 mm;

(b) In all other cases: 90 mm.

Any packing necessary beneath *bearers* shall be of a material as durable and as incompressible as the *bearer* itself.

6.12.7 *Joints*

6.12.7.1
Joints in *bearers* shall be made only over supports but shall not occur where the *bearer* is fixed directly to an *anchor pile* or *braced pile*.

6.12.7.2
A joint in a *bearer* shall be made over a support with a connection having a *capacity* of:

(a) Not less than 12 kN in tension or compression along the line of the *bearer*, or 6 kN each on both sides, if the *bearer* is one piece of timber; or

(b) 6 kN on one side of the joint when one laminate is continued over the support.

See figure 6.19.

6.13 Stringers

6.13.1
Stringers shall be of the dimensions given by table 6.7, or table 14.7 for 3 kPa *floor loads*. No *stringer* shall support more than one floor and its associated *non-loadbearing walls*.

6.13.2
As shown in figure 6.20 *stringers* shall be fixed to their supporting *foundation walls* with M12 bolts set not less than 100 mm into the wall at *spacings* as given by table 6.7. Proprietary bolt system alternatives shall comply with the provisions of 2.4.7 and have a minimum *capacity* of 4.5 kN in the vertical direction, and 7.3 kN parallel to the *stringer*.

Copyright Standards New Zealand

Table 6.7 – Stringer sizes and fixings (see 6.13.1 and 6.13.2)

Stringer nominal size (mm)	**Maximum span of floor joists** (m) **at a maximum M12 bolt spacing** (mm) **of:**				
	800	900	1200	1600	2400
190 x 45	6.0	5.0	4.0	3.0	2.0
140 x 45	6.0	5.0	4.0	3.0	–

Amd 2 May '06

Amd 1 Dec '00

© The Crown in right of New Zealand, administered by the New Zealand Standards Executive. Access to this standard has been sponsored by the Ministry of Business, Innovation, and Employment under copyright license LN001498. You are not permitted to reproduce or distribute any part of this standard without prior written permission from Standards New Zealand, on behalf of New Zealand Standards Executive, unless your actions are covered by Part 3 of the Copyright Act 1994.

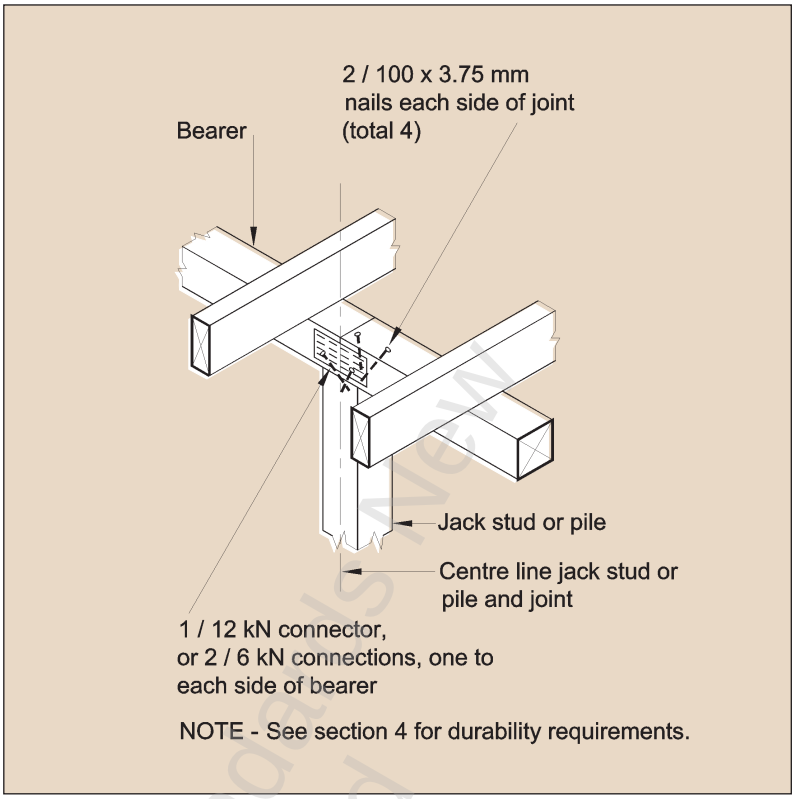

Figure 6.19 – Joints in bearers (see 6.12.7.1 and 6.12.7.2)

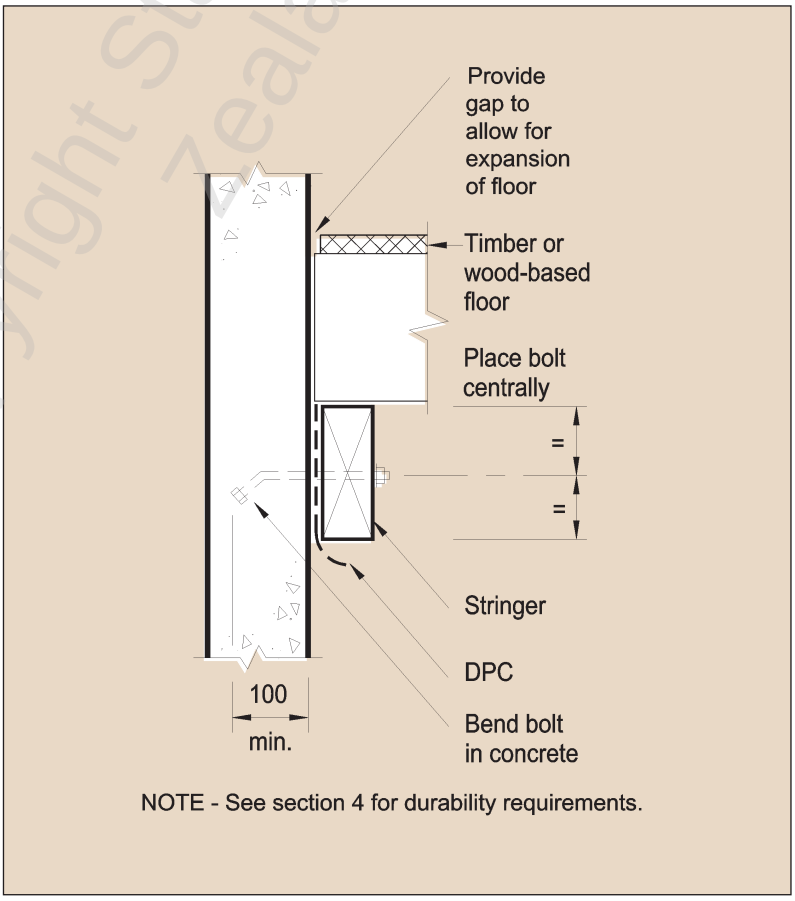

Figure 6.20 – Fixing of stringers to foundation walls (see 6.13.2)

© The Crown in right of New Zealand, administered by the New Zealand Standards Executive. Access to this standard has been sponsored by the Ministry of Business, Innovation, and Employment under copyright license LN001498. You are not permitted to reproduce or distribute any part of this standard without prior written permission from Standards New Zealand, on behalf of New Zealand Standards Executive, unless your actions are covered by Part 3 of the Copyright Act 1994.

6.14 Prevention of dampness

6.14.1 ***Ventilation opening area required***

To prevent subfloor dampness, provide subfloor ventilation openings over the whole subfloor area, unless the provisions of 6.14.3 are applied. Ventilation openings shall be not less than 3500 mm^2 per m^2 of floor area and evenly distributed around the *foundation* perimeter.

6.14.2

Acceptable methods include:

(a) Ventilators with sufficient opening *spaced* regularly, commencing 750 mm from the corner and at intervals not exceeding 1.8 m (see figure 6.11);

(b) Continuous 20 mm wide slots between baseboards;

(c) A 50 mm gap between the *wall plates* and a *boundary joist* at the ends of cantilevered floor *joists* and the *wall plate* and *joist,* where the *bearer* is cantilevered;

(d) Other regularly *spaced* openings that will provide adequate ventilation.

C6.14.3

0.125 mm thick polythene sheet lapped 75 mm at the joints and complying with the above conditions is adequate as a ground cover.

6.14.3 ***Ground cover***

Where ventilation openings of 3500 mm^2 per m^2 can not be provided, or the subfloor airflow is obstructed by party walls, attached terraces or similar, or where for larger buildings any part of the subfloor space is more than 7.5 m from the nearest ventilation opening, a damp-proof ground cover over the whole subfloor shall be used. The following conditions shall apply:

(a) The vapour barrier shall be a ground cover of not less than 50 MNs/g vapour flow resistance held against movement;

(b) It is held in place with rocks or bricks or similar method; and

(c) Ventilation openings shall have a net open area of no less than 700 mm^2 for every m^2 of floor level and be located to provide a cross-flow in the subfloor space; and

(d) The ground is shaped to prevent water accumulation on the vapour barrier and to drain to the exterior.

C6.14.4

Clause 6.14.4 requires access height not less than 450 mm but does not require all timbers to be 450 mm or more above ground.

6.14.4

Access shall be provided to permit visual inspection of all subfloor *framing* members. A crawl space for this purpose shall be not less than 450 mm high to the underside of the floor *joists*.

6.14.5

A clear horizontal separation of not less than 450 mm shall be maintained between the outside of any wall *cladding* and the adjacent ground (see figure 6.21).

6.15 Nailing schedule

Table 6.8 specifies the nails to be used in subfloor *framing*. See 2.4.4 for other requirements for nails.

Copyright Standards New Zealand

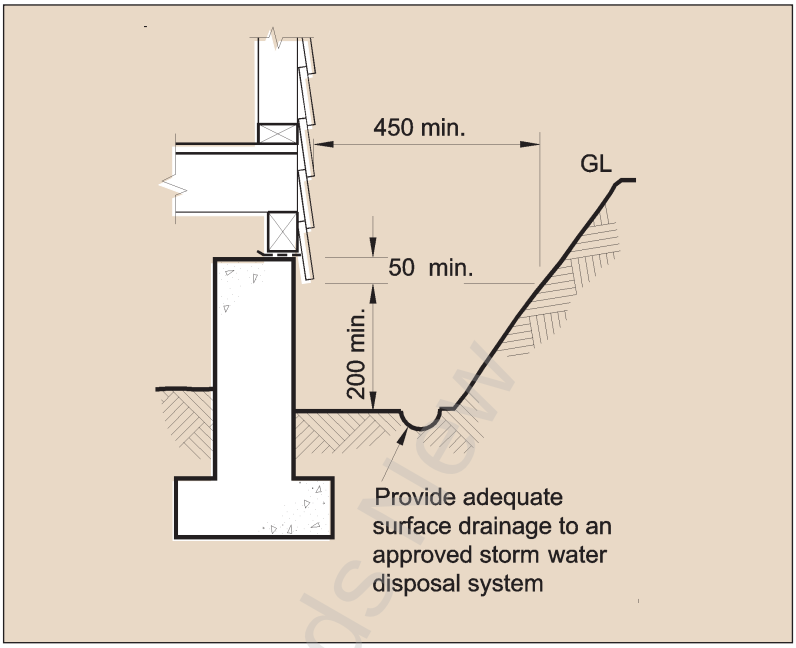

Figure 6.21 – Clearance between cladding and adjacent ground
(see 6.14.5)

Table 6.8 – Nailing schedule for hand driven and power driven nails

Joint	Hand driven nails		Power driven nails	
	Length x diameter and type (mm x mm)	**Number and location**	**Length x diameter and type** (mm x mm)	**Number and location**
Bearer to jack stud	100 x 3.75	2 (skewed)	90 x 3.15	2 (skewed)
Bearer end to cut-between plates	100 x 3.75	4 (skewed)	90 x 3.15	4 (skewed)
Bearer to top plate of wall framing	100 x 3.75	4 (skewed)	90 x 3.15	6 (skewed)
Stud or jack stud to plate	100 x 3.75 or 75 x 3.15	2 (end nailed) 4 (skewed)	90 x 3.15	3 (end nailed)

Amd 2 May '06

NOTE –
(1) Nail lengths and diameters are the minimum required.
(2) Refer to 4.4 for required protective coatings for metal fasteners.

© The Crown in right of New Zealand, administered by the New Zealand Standards Executive. Access to this standard has been sponsored by the Ministry of Business, Innovation, and Employment under copyright license LN001498. You are not permitted to reproduce or distribute any part of this standard without prior written permission from Standards New Zealand, on behalf of New Zealand Standards Executive, unless your actions are covered by Part 3 of the Copyright Act 1994.

Copyright Standards New Zealand

© The Crown in right of New Zealand, administered by the New Zealand Standards Executive. Access to this standard has been sponsored by the Ministry of Business, Innovation, and Employment under copyright license LN001498. You are not permitted to reproduce or distribute any part of this standard without prior written permission from Standards New Zealand, on behalf of New Zealand Standards Executive, unless your actions are covered by Part 3 of the Copyright Act 1994.

SECTION 7
FLOORS

7.1 Floor joists **7**-3
7.2 Flooring **7**-15
7.3 Structural floor diaphragms **7**-19
7.4 Timber decks **7**-20
7.5 Concrete slab-on-ground floors for timber buildings **7**-21
7.6 Nailing schedule for timber floor framing **7**-33

Table

7.1 Floor joists **7**-4
7.2 Cantilevered floor joists **7**-11
7.3 Flooring **7**-15
7.4 Structural plywood flooring **7**-17
7.5 Nailing schedule for hand driven and power driven nails **7**-34

Figure

7.1 Lapped or butted joints in floor joists **7**-5
7.2 Floor joists layout criteria **7**-7
7.3 Support to floor joists under loadbearing walls **7**-8
7.4 Loadbearing wall over foundation **7**-9
7.5 Support to non-loadbearing walls **7**-10
7.6 Lapped cantilevered joists (stepped/notched) **7**-12
7.7 Openings in floors **7**-14
7.8 Holes and notches in floor joists other than cantilevered joists **7**-16
7.9 Floor diaphragms **7**-18
7.10 Minimum heights of finished concrete (residential, habitable) slab-on-ground floors above adjoining finished ground level **7**-22
7.11 Provision of permanent paving adjoining buildings with concrete slab-on-ground floors **7**-22
7.12 Foundation edge details – *In situ* concrete **7**-23
7.13 Foundation edge details – Concrete masonry **7**-24
7.14 Masonry veneer foundation edge details – *In situ* concrete **7**-26
7.15 Masonry veneer foundation edge details – Concrete masonry **7**-27
7.16 Construction of ground slabs **7**-29
7.17 Irregular slab (plan view) **7**-30
7.18 Shrinkage control joints **7**-32
7.19 Ground slabs beneath internal loadbearing walls **7**-33

Copyright Standards New Zealand

© The Crown in right of New Zealand, administered by the New Zealand Standards Executive. Access to this standard has been sponsored by the Ministry of Business, Innovation, and Employment under copyright license LN001498. You are not permitted to reproduce or distribute any part of this standard without prior written permission from Standards New Zealand, on behalf of New Zealand Standards Executive, unless your actions are covered by Part 3 of the Copyright Act 1994.

Copyright Standards New Zealand

© The Crown in right of New Zealand, administered by the New Zealand Standards Executive. Access to this standard has been sponsored by the Ministry of Business, Innovation, and Employment under copyright license LN001498. You are not permitted to reproduce or distribute any part of this standard without prior written permission from Standards New Zealand, on behalf of New Zealand Standards Executive, unless your actions are covered by Part 3 of the Copyright Act 1994.

7 FLOORS

This section sets down requirements for suspended timber framed floors and concrete slab-on-ground floors for live *loads* up to 2 kPa, (3 kPa live *loads* are covered in section 14). Floors required to be structural floor *diaphragms* in accordance with 5.4.2.2 must meet the requirements of 7.3, in addition to the other provisions of this section.

7.1 Floor joists

7.1.1 *General*

7.1.1.1
Floor *joists* shall be of the dimensions given in tables 7.1 (1.5 kPa and 2 kPa *floor loads*) and 14.8 (3 kPa *floor loads*). The 1.5 kPa and 3 kPa floor *joist* tables are for internal situations (i.e. where the timber will remain dry) and the 2 kPa tables for external situations (i.e. for *decks* where the timber will be exposed to wetting).

Amd 2 May '06

7.1.1.2
Floor *joists* shall have their top surfaces set to a common level to support flooring and shall be laid in straight lines on edge.

7.1.1.3
Floor *joists* shall be laid so that any crook in them will straighten under *load*. They may be cut through to the centreline and over supports only to correct the crook, and in such cases they shall be considered as being jointed over those supports, for the purpose of determining the span.

C7.1.1.3
'Green' floor joists spanning more than 3 m should be propped level until their moisture content is 20 % or less.

7.1.1.4
Floor *joists* shall have minimum bearing on their supports of 32 mm.

7.1.1.5
Joints in floor *joists* shall be made only over supports, but not where the *joist* is cantilevered beyond the support.

7.1.1.6
Joints in floor *joists* may be butted over supports provided that in the following cases joints shall be lapped or flitched as specified in 7.1.1.7:

(a) In any *joist* to which a *diagonal brace* is attached;

(b) In every third *joist* at a line of support, except where a sheet flooring extends not less than 600 mm on each side of the joint.

7.1.1.7
Joints in floor *joists* (see figure 7.1) shall either:

(a) Be lapped not less than 150 mm on each side of the centre line of the support and nailed together from both sides; or

(b) Be butted and flitched with a piece of timber of the same dimensions as the *joists* and extending not less than 150 mm on each side of the *joist* ends and nailed to both lengths of *joists* from both sides;

(c) Have an alternative fixing with a *capacity* of 6 kN in tension.

Copyright Standards New Zealand

Table 7.1 – Floor joists (see 7.1.1.1) **– No. 1 Framing and MSG 6**

(a) 1.5 kPa floor load (dry in service)

Floor joist size	Maximum span* of joists at a maximum spacing (mm) of:		
	400	450	600
(mm x mm)	(m)	(m)	(m)
90 x 35	1.20	1.20	1.05
90 x 45	1.30	1.25	1.10
140 x 35	1.90	1.80	1.60
140 x 45	2.45	2.35	1.80
190 x 45	3.20	3.10	2.80
240 x 45	4.00	3.90	3.50
290 x 45	4.70	4.55	4.15

(b) 2 kPa floor load (wetted in service)

Floor joist size	Maximum span* of joists at a maximum spacing (mm) of:		
	400	450	600
(mm x mm)	(m)	(m)	(m)
90 x 35	1.10	1.05	0.90
90 x 45	1.20	1.15	1.00
140 x 35	1.70	1.60	1.40
140 x 45	1.95	1.85	1.60
190 x 45	2.65	2.50	2.15
240 x 45	3.35	3.15	2.70
290 x 45	4.05	3.80	3.30

* May be increased by 10 % for joists continuous over 2 or more spans.

Amd 2
May '06

Copyright Standards New Zealand

© The Crown in right of New Zealand, administered by the New Zealand Standards Executive. Access to this standard has been sponsored by the Ministry of Business, Innovation, and Employment under copyright license LN001498. You are not permitted to reproduce or distribute any part of this standard without prior written permission from Standards New Zealand, on behalf of New Zealand Standards Executive, unless your actions are covered by Part 3 of the Copyright Act 1994.

© The Crown in right of New Zealand, administered by the New Zealand Standards Executive. Access to this standard has been sponsored by the Ministry of Business, Innovation, and Employment under copyright license LN001498. You are not permitted to reproduce or distribute any part of this standard without prior written permission from Standards New Zealand, on behalf of New Zealand Standards Executive, unless your actions are covered by Part 3 of the Copyright Act 1994.

Table 7.1 – Floor joists (see 7.1.1.1) **– VSG 8, MSG 8 and G 8**

(a) 1.5 kPa floor load VSG 8 and MSG 8 (dry in service)

Floor joist size	Maximum span* of joists at a maximum spacing (mm) of:		
	400	450	600
(mm x mm)	(m)	(m)	(m)
90 x 35	1.35	1.30	1.20
90 x 45	1.45	1.40	1.25
140 x 35	2.10	2.00	1.80
140 x 45	2.70	2.60	2.00
190 x 45	3.55	3.45	3.15
240 x 45	4.40	4.30	3.90
290 x 45	5.20	5.05	4.60

(b) 2 kPa floor load VSG 8, MSG 8 and G 8 (wetted in service)

Floor joist size	Maximum span* of joists at a maximum spacing (mm) of:		
	400	450	600
(mm x mm)	(m)	(m)	(m)
90 x 35	1.35	1.30	1.10
90 x 45	1.55	1.45	1.25
140 x 35	2.10	2.00	1.75
140 x 45	2.45	2.30	2.00
190 x 45	3.30	3.10	2.70
240 x 45	4.15	3.95	3.40
290 x 45	5.05	4.75	4.10

* May be increased by 10 % for joists continuous over 2 or more spans.

Amd 2
May '06

Copyright Standards New Zealand

Table 7.1 – Floor joists (see 7.1.1.1) **– VSG 10 and MSG 10**

(a) 1.5 kPa floor load (dry in service)

Floor joist size	Maximum span* of joists at a maximum spacing (mm) of:		
	400	450	600
(mm x mm)	(m)	(m)	(m)
90 x 35	1.45	1.40	1.25
90 x 45	1.55	1.50	1.35
140 x 35	2.25	2.15	1.90
140 x 45	2.90	2.80	2.15
190 x 45	3.80	3.70	3.35
240 x 45	4.70	4.60	4.20
290 x 45	5.60	5.40	4.95

(b) 2 kPa floor load (wetted in service)

Floor joist size	Maximum span* of joists at a maximum spacing (mm) of:		
	400	450	600
(mm x mm)	(m)	(m)	(m)
90 x 35	1.35	1.30	1.10
90 x 45	1.55	1.45	1.25
140 x 35	2.10	2.00	1.75
140 x 45	2.45	2.30	2.00
190 x 45	3.30	3.10	2.70
240 x 45	4.15	3.95	3.40
290 x 45	5.05	4.75	4.10

* May be increased by 10 % for joists continuous over 2 or more spans.

Amd 2
May '06

Copyright Standards New Zealand

© The Crown in right of New Zealand, administered by the New Zealand Standards Executive. Access to this standard has been sponsored by the Ministry of Business, Innovation, and Employment under copyright license LN001498. You are not permitted to reproduce or distribute any part of this standard without prior written permission from Standards New Zealand, on behalf of New Zealand Standards Executive, unless your actions are covered by Part 3 of the Copyright Act 1994.

© The Crown in right of New Zealand, administered by the New Zealand Standards Executive. Access to this standard has been sponsored by the Ministry of Business, Innovation, and Employment under copyright license LN001498. You are not permitted to reproduce or distribute any part of this standard without prior written permission from Standards New Zealand, on behalf of New Zealand Standards Executive, unless your actions are covered by Part 3 of the Copyright Act 1994.

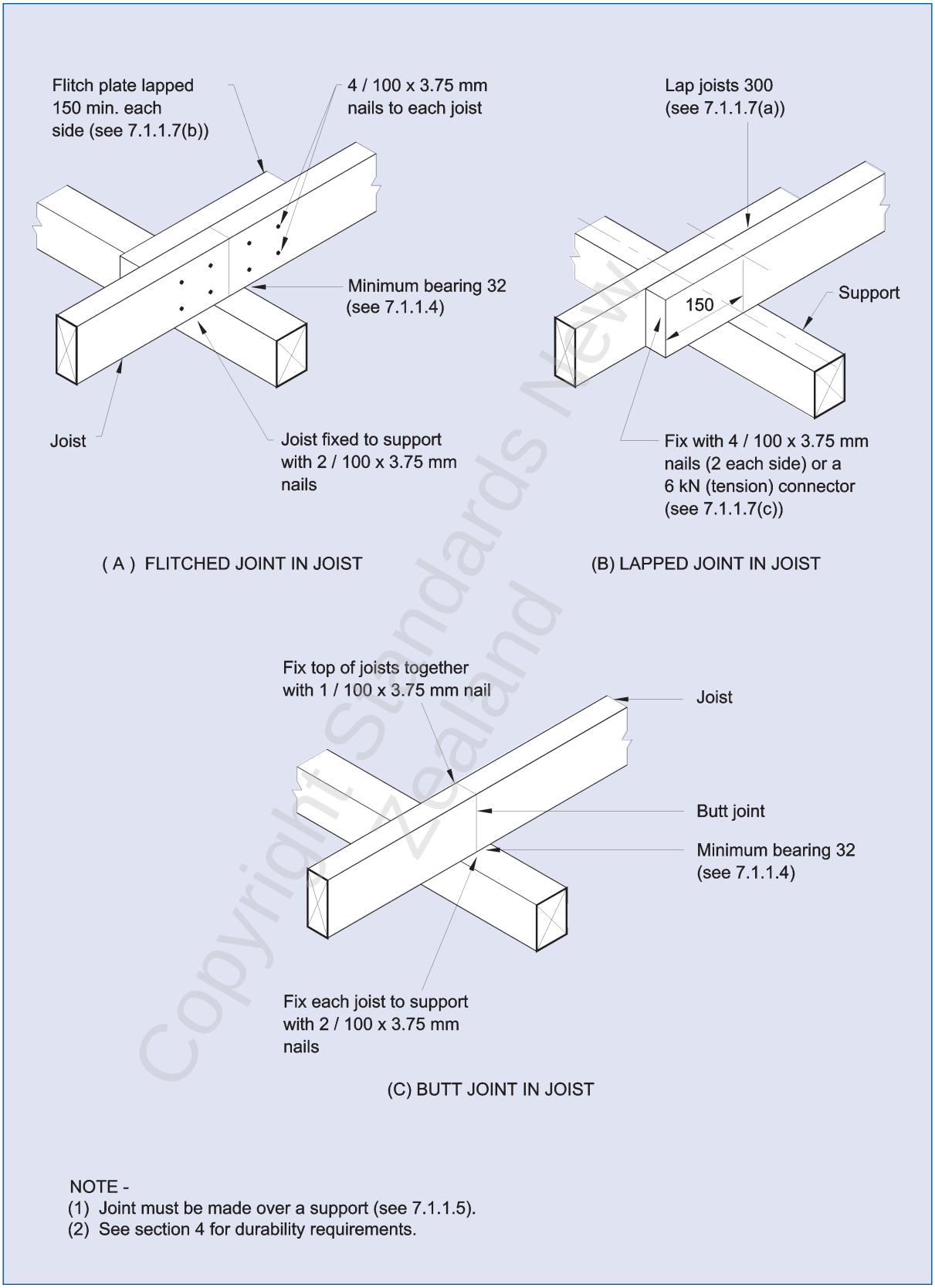

Figure 7.1 – Lapped or butted joints in floor joists (see 7.1.1.7)

© The Crown in right of New Zealand, administered by the New Zealand Standards Executive. Access to this standard has been sponsored by the Ministry of Business, Innovation, and Employment under copyright license LN001498. You are not permitted to reproduce or distribute any part of this standard without prior written permission from Standards New Zealand, on behalf of New Zealand Standards Executive, unless your actions are covered by Part 3 of the Copyright Act 1994.

7.1.2 *Lateral support of floor joists*

7.1.2.1
Lines of lateral support to floor *joists* as specified in 7.1.2.2 shall be provided within 300 mm of the following locations:

(a) Ground floor *joists*: Along all subfloor lines of horizontal support (see 5.4);

(b) Other floor *joists*: Along the line of each wall that contains a *wall bracing element* in the *storey* below.

7.1.2.2
A line of lateral support to floor *joists* (see figure 7.2) shall consist of:

(a) At the ends of *joists*: A continuous *boundary joist* 25 mm thick and the same depth as the floor *joists*; or

(b) In any location including at *joist* ends: Full depth *blocking* or *strutting* complying with 7.1.2.4 between adjacent floor *joists* at not more than 1.8 m maximum centres provided that:

(i) There shall be solid *blocking* between the 2 edge pairs of *joists*; and

(ii) Additional solid *blocking* shall be provided where required by 7.1.4.2.

7.1.2.3
In addition to any lateral support required by 7.1.2.1, floor *joists* having a *span* of over 2.5 m and a depth of 4 or more times their thickness shall be laterally supported by continuous *blocking* or *strutting* complying with 7.1.2.4 at mid *span* (see figure 7.2).

C7.1.2.4
Squeaks in floor can result from solid blocking that does not fit tightly between the joists. This can be caused by drying/shrinkage of both joists and blocking.

C7.1.2.4(a)
As far as is practicable, joists should be dry before fitting solid blocking or strutting.

7.1.2.4
Full depth *blocking* or *strutting* required by 7.1.2.2 (b) or 7.1.2.3 shall be either:

(a) Timber *blocking* 35 mm thick, the same depth as the *joists*, neatly cut between adjacent *joists*; or

(b) *Herringbone strutting* consisting of 2 pieces of 35 mm x 35 mm timber set diagonally in opposite directions, between the top and bottom edges of the *joists*.

7.1.3 *Floor joists under walls*

7.1.3.1
Where a *loadbearing wall* runs parallel to the line of floor *joists* beneath, it shall be supported by a pair of *joists* (see figure 7.3). Such a pair of *joists* may be separated by solid packing not exceeding 50 mm thick or half the thickness of the wall above, whichever is the lesser, at not more than 600 mm centres. If fitted floor decking is used, there shall be not less than 20 mm landing on the *joists* for the decking.

Copyright Standards New Zealand

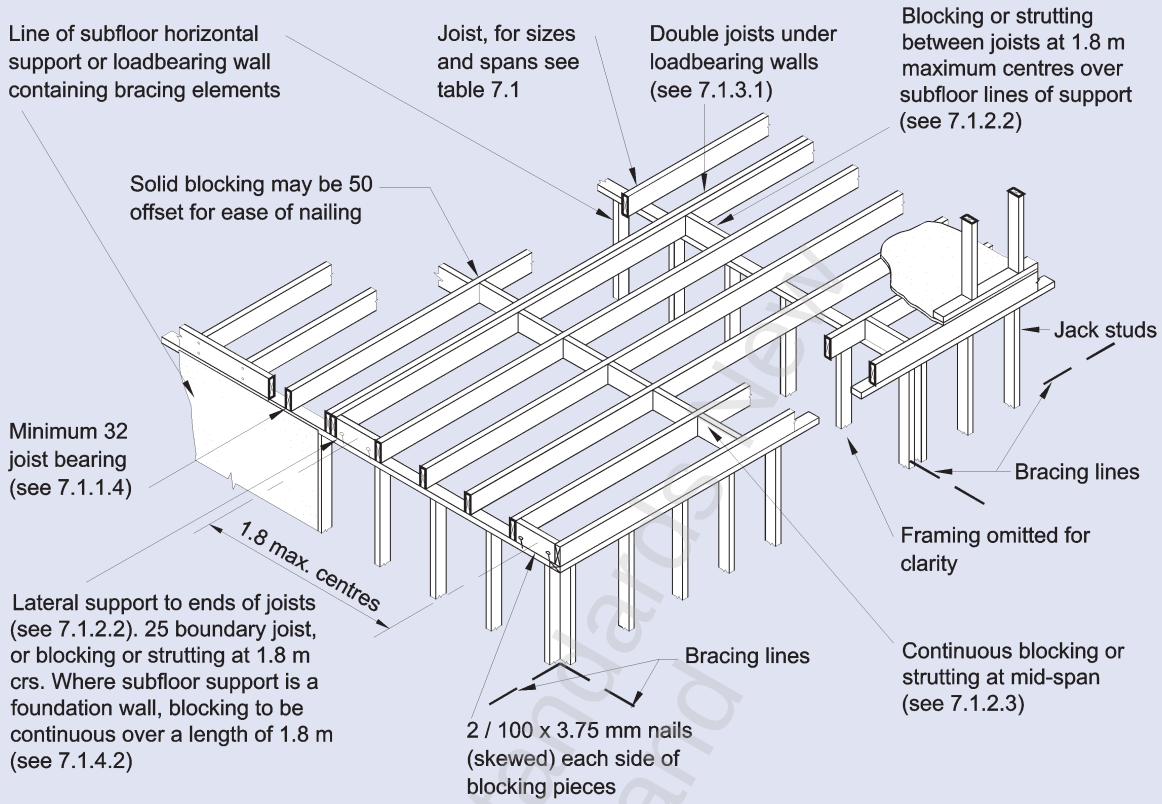

NOTE -
(1) Refer to foundation drawings to identify joists adjacent to lines of support which must have 6 kN fixings to bearer (see 6.7.3.1).
(2) Edge support to be provided for flooring (see 7.2.3.4).
(3) See section 4 for durability requirements.

Figure 7.2 – Floor joists layout criteria (see 7.1.2.2)

7.1.3.2

Amd 1 Dec '00

Where such doubled *joists* support a *trimmer stud*, itself supporting a roof only, the *trimmer stud* shall be located within 300 mm of the end of the span of the doubled floor *joist*. Floor *joists* supporting *trimmer studs* landing outside that limit, or supporting *trimmer studs* which in turn support *floor loads*, shall be subject to *specific engineering design*.

7.1.3.3

Amd 2 May '06

Where a *loadbearing wall* runs at right angles to the line of *joists*, such a *loadbearing wall* shall be located at not more than 200 mm centre-to-centre from a *bearer* or subfloor *loadbearing wall* (see figure 7.3(E)).

7.1.3.4

Where a *loadbearing wall* is directly over a continuous concrete or concrete masonry *foundation wall*, it may be supported by a 200 mm long packer *spaced* at the same distance as the *studs* in the *loadbearing wall*, provided that the *joist* and packers are supported over the entire wall length by the *wall plate* (see figure 7.4).

© The Crown in right of New Zealand, administered by the New Zealand Standards Executive. Access to this standard has been sponsored by the Ministry of Business, Innovation, and Employment under copyright license LN001498. You are not permitted to reproduce or distribute any part of this standard without prior written permission from Standards New Zealand, on behalf of New Zealand Standards Executive, unless your actions are covered by Part 3 of the Copyright Act 1994.

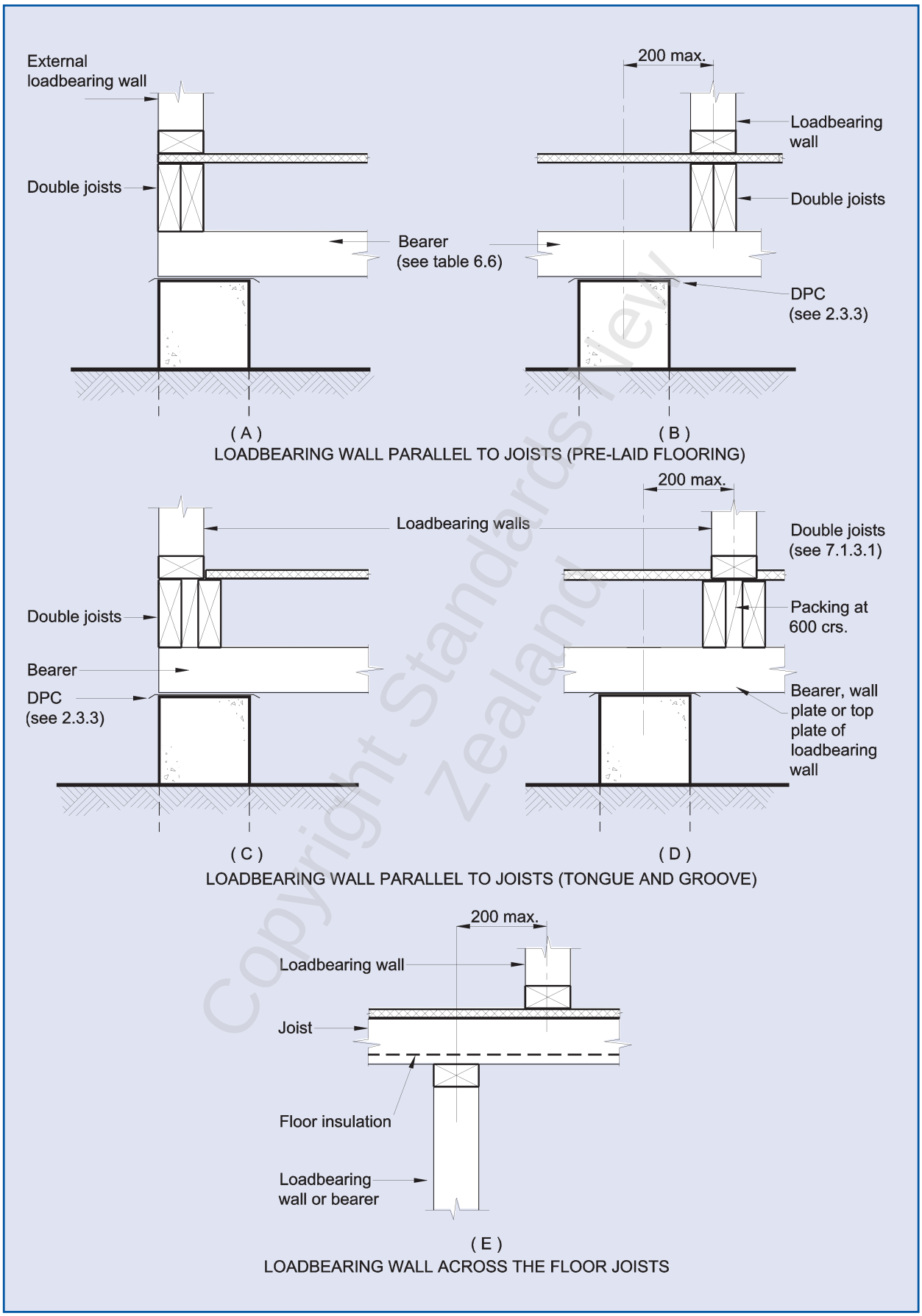

Figure 7.3 – Support to floor joists under loadbearing walls (see 7.1.3)

© The Crown in right of New Zealand, administered by the New Zealand Standards Executive. Access to this standard has been sponsored by the Ministry of Business, Innovation, and Employment under copyright license LN001498. You are not permitted to reproduce or distribute any part of this standard without prior written permission from Standards New Zealand, on behalf of New Zealand Standards Executive, unless your actions are covered by Part 3 of the Copyright Act 1994.

© The Crown in right of New Zealand, administered by the New Zealand Standards Executive. Access to this standard has been sponsored by the Ministry of Business, Innovation, and Employment under copyright license LN001498. You are not permitted to reproduce or distribute any part of this standard without prior written permission from Standards New Zealand, on behalf of New Zealand Standards Executive, unless your actions are covered by Part 3 of the Copyright Act 1994.

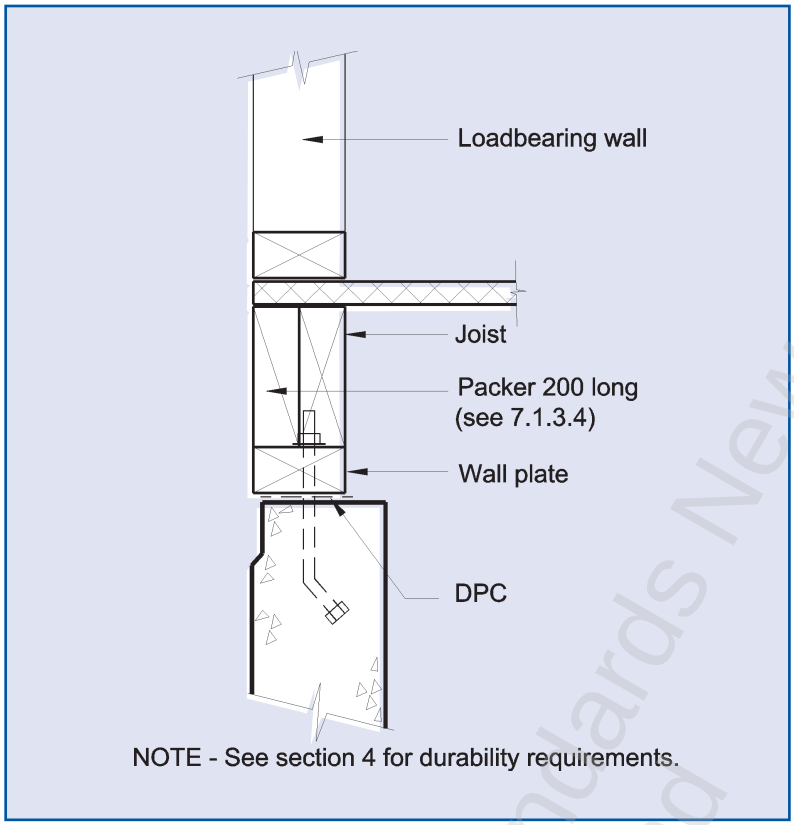

Figure 7.4 – Loadbearing wall over foundation (see 7.1.3.4)

7.1.3.5
Where a *non-loadbearing wall*:

(a) Which contains *wall bracing elements* runs parallel to the line of floor *joists* beneath, it shall either:

(i) Be over a *joist*; or

(ii) Be supported by solid *blocking* between the *joists* on either side of the wall in accordance with 7.1.3.6 as shown in figure 7.5; or

(b) Does not contain a *wall bracing element* it shall be within 150 mm of a *joist* measured between centrelines.

Amd 2 May '06

7.1.3.6
Solid *blocking* shall be 90 mm x 45 mm cut neatly between *joists*, with its top flush with the top of the *joists*, set at each end of the wall above, at each side of any door openings, and at not more than 1.2 m centres elsewhere.

7.1.4 *Floor joists connected to foundation walls acting as subfloor braces*

7.1.4.1
Where floor *joists* run parallel to *foundation walls*, one *joist* shall be directly above the length of *foundation wall* and shall be directly supported for a length of not less than 1.4 m by a *wall plate* or *bearer,* fixed to the *foundation wall* in accordance with 6.11.9.1 (see figure 6.16).

Copyright Standards New Zealand

© The Crown in right of New Zealand, administered by the New Zealand Standards Executive. Access to this standard has been sponsored by the Ministry of Business, Innovation, and Employment under copyright license LN001498. You are not permitted to reproduce or distribute any part of this standard without prior written permission from Standards New Zealand, on behalf of New Zealand Standards Executive, unless your actions are covered by Part 3 of the Copyright Act 1994.

7.1.4.2
Where the floor *joists* run at right angles to the *foundation wall*, then either:

(a) The ends of the *joists* shall be laterally supported by a continuous *boundary joist* in accordance with 7.1.2.2 (a); or

(b) The solid *blocking* required by 7.1.2.2 (b) shall be provided between each pair of *joists* for a length of 1.8 m along the line of the *foundation wall* and either:

(i) Where the *foundation wall* is at a corner, the 1.8 m length shall be measured from the corner (see figure 7.9); or

(ii) Where the *foundation wall* is not at a corner, the 1.8 m length shall be symmetrically disposed on the *foundation wall*.

Amd 1 Dec '00

C7.1.5.1
(a) Cantilevered floors for bay windows are outside the scope of table 7.2.
(b) Refer to NZS 3602 and section 4 for protection required for cantilevered joists exposed to the elements.
(c) The cantilever lengths for the balcony joists have been determined on the basis of the engineering properties of wet timber. For this reason these joists may be exposed to the weather and wetting. The same does not apply to the other joists as these have been determined based on dry properties and accordingly must be kept dry, by closing in or other means, throughout the life of the building.

7.1.5 *Cantilevered floor joists*

7.1.5.1
Floor *joists* may project as cantilevers to the distance beyond the face of the support given by table 7.2 provided that cantilevered floor *joists* shall neither support a *balcony* decking having a mass exceeding 25 kg/m^2, nor support a *balcony* balustrade having a mass exceeding 5.5 kg/m^2. The maximum height of a *wall* supported by cantilevered *joists* shall be 2.4 m.

The cantilevered floor *joists* in table 7.2 under the heading "2.0 kPa *floor load Balcony* floor and balustrade only" may be wetted in service. All other cantilevered *joists* shall be kept dry in service. Amd 2 May '06

C7.1.5.2
When a cantilevered floor joist supports a balcony or the like, it is frequently necessary to provide a notch or step in the joist at the external wall for weatherproofing.

7.1.5.2
The depth of the *joist* to be used in table 7.2 shall be the net depth at any notch, step, or hole occurring within two-thirds of the cantilever length from the face of the support.

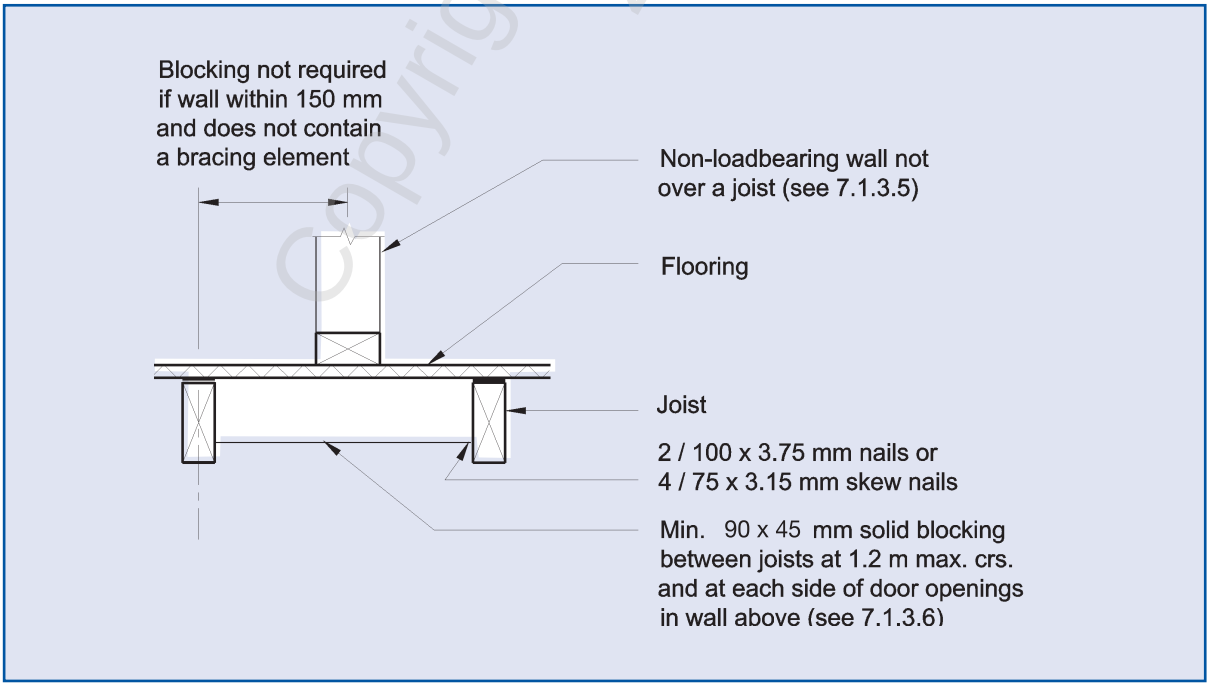

Amd 2 May '06

Figure 7.5 – Support to non-loadbearing walls (see 7.1.3.5)

© The Crown in right of New Zealand, administered by the New Zealand Standards Executive. Access to this standard has been sponsored by the Ministry of Business, Innovation, and Employment under copyright license LN001498. You are not permitted to reproduce or distribute any part of this standard without prior written permission from Standards New Zealand, on behalf of New Zealand Standards Executive, unless your actions are covered by Part 3 of the Copyright Act 1994.

Table 7.2 – Cantilevered floor joists (see 7.1.5) **– No. 1 Framing and MSG 6**

Joist size	Joist spacing	Maximum cantilever length of joist supporting:						
		Wall, 1.5 kPa floor load						2 kPa floor load
		Light roof of span: (m)			Heavy roof of span: (m)			Balcony* floor and balustrade only
		4.0	8.0	12.0	4.0	8.0	12.0	
(mm x mm)	(mm)	(mm)	(mm)	(mm)	(mm)	(mm)	(mm)	(mm)
90 x 45	600	50	50	50	50	50	50	500
	450	100	50	50	50	50	50	550
	400	100	100	100	100	50	50	600
140 x 45	600	200	150	100	150	100	100	750
	450	300	200	150	200	150	100	900
	400	300	250	150	200	150	100	950
190 x 45	600	400	300	200	300	200	150	1000
	450	550	400	250	400	250	200	1250
	400	550	450	300	400	300	200	1300
240 x 45	600	650	450	300	450	300	200	1350
	450	800	650	400	600	400	300	1550
	400	850	650	500	650	450	350	1650
290 x 45	600	950	700	500	650	450	350	1650
	450	1150	900	650	900	600	450	1900
	400	1150	950	700	900	650	500	2000

Amd 2 May '06

* Applies to balconies of single residences only. Only these joists may be wetted in service.

Copyright Standards New Zealand

Table 7.2 – Cantilevered floor joists (see 7.1.5) **– VSG 8 and MSG 8**

Joist size	Joist spacing	Maximum cantilever length of joist supporting:						
		Wall, 1.5 kPa floor load						2 kPa floor load
		Light roof of span: (m)			Heavy roof of span: (m)			Balcony* floor and balustrade only
		4.0	8.0	12.0	4.0	8.0	12.0	
(mm x mm)	(mm)	(mm)	(mm)	(mm)	(mm)	(mm)	(mm)	(mm)
90 x 45	600	100	50	50	50	50	50	600
	450	150	100	50	100	50	50	700
	400	150	100	50	100	50	50	750
140 x 45	600	300	200	150	200	150	100	950
	450	300	250	200	250	150	100	1150
	400	350	250	200	250	150	100	1200
190 x 45	600	550	400	250	400	250	200	1350
	450	600	450	350	450	300	250	1550
	400	600	450	400	450	300	250	1650
240 x 45	600	800	650	400	650	450	300	1700
	450	900	700	550	700	500	350	1950
	400	900	700	600	700	500	400	2050
290 x 45	600	1150	900	650	900	650	500	2050
	450	1200	1000	800	950	700	550	2350
	400	1250	1000	850	1000	700	550	2500

* Applies to balconies of single residences only. Only these joists may be wetted in service.

Amd 2
May '06

Copyright Standards New Zealand

© The Crown in right of New Zealand, administered by the New Zealand Standards Executive. Access to this standard has been sponsored by the Ministry of Business, Innovation, and Employment under copyright license LN001498. You are not permitted to reproduce or distribute any part of this standard without prior written permission from Standards New Zealand, on behalf of New Zealand Standards Executive, unless your actions are covered by Part 3 of the Copyright Act 1994.

© The Crown in right of New Zealand, administered by the New Zealand Standards Executive. Access to this standard has been sponsored by the Ministry of Business, Innovation, and Employment under copyright license LN001498. You are not permitted to reproduce or distribute any part of this standard without prior written permission from Standards New Zealand, on behalf of New Zealand Standards Executive, unless your actions are covered by Part 3 of the Copyright Act 1994.

Table 7.2 – Cantilevered floor joists (see 7.1.5) **– VSG 10 and MSG 10**

Joist size	Joist spacing	Maximum cantilever length of joist supporting:						
		Wall, 1.5 kPa floor load						2 kPa floor load
		Light roof of span: (m)			Heavy roof of span: (m)			Balcony* floor and balustrade only
		4.0	8.0	12.0	4.0	8.0	12.0	
(mm x mm)	(mm)	(mm)	(mm)	(mm)	(mm)	(mm)	(mm)	(mm)
90 x 45	600	150	100	50	100	50	50	600
	450	150	100	100	100	50	50	700
	400	150	100	100	100	50	50	750
140 x 45	600	300	250	150	250	150	100	950
	450	350	250	200	250	150	150	1150
	400	350	300	200	250	200	150	1200
190 x 45	600	550	450	350	450	300	200	1350
	450	600	500	400	450	350	250	1550
	400	650	500	400	500	350	250	1650
240 x 45	600	850	700	550	650	450	350	1700
	450	950	750	600	400	500	400	1950
	400	1000	800	650	650	550	400	2050
290 x 45	600	1200	950	800	950	700	550	2050
	450	1300	1050	850	1000	750	600	2350
	400	1350	1100	900	1050	750	600	2500

Amd 2 May '06

* Applies to balconies of single residences only. Only these joists may be wetted in service.

Copyright Standards New Zealand

7.1.5.3
Cantilevered floor *joists* shall either:

(a) Be continuous over the outermost support; or

(b) Be lapped over the outermost support and fixed to the adjacent *joist* as shown in figure 7.6, with the total length of the cantilevered *joist* being not less than 2.25 times the cantilever length.

C7.1.5.3
The free ends of cantilevered floor joists of green timber should be propped level until the moisture content is 20 % or less, because green timber cantilevered joists can deflect excessively under their own weight and assume permanent deformations unless propped, see NZS 3602.

© The Crown in right of New Zealand, administered by the New Zealand Standards Executive. Access to this standard has been sponsored by the Ministry of Business, Innovation, and Employment under copyright license LN001498. You are not permitted to reproduce or distribute any part of this standard without prior written permission from Standards New Zealand, on behalf of New Zealand Standards Executive, unless your actions are covered by Part 3 of the Copyright Act 1994.

7.1.6 *Trimmers and trimming joists*

7.1.6.1
Openings in *joisted* floors shall be bounded by *trimmer* and *trimming joists* defined in 1.3 (see figure 7.7).

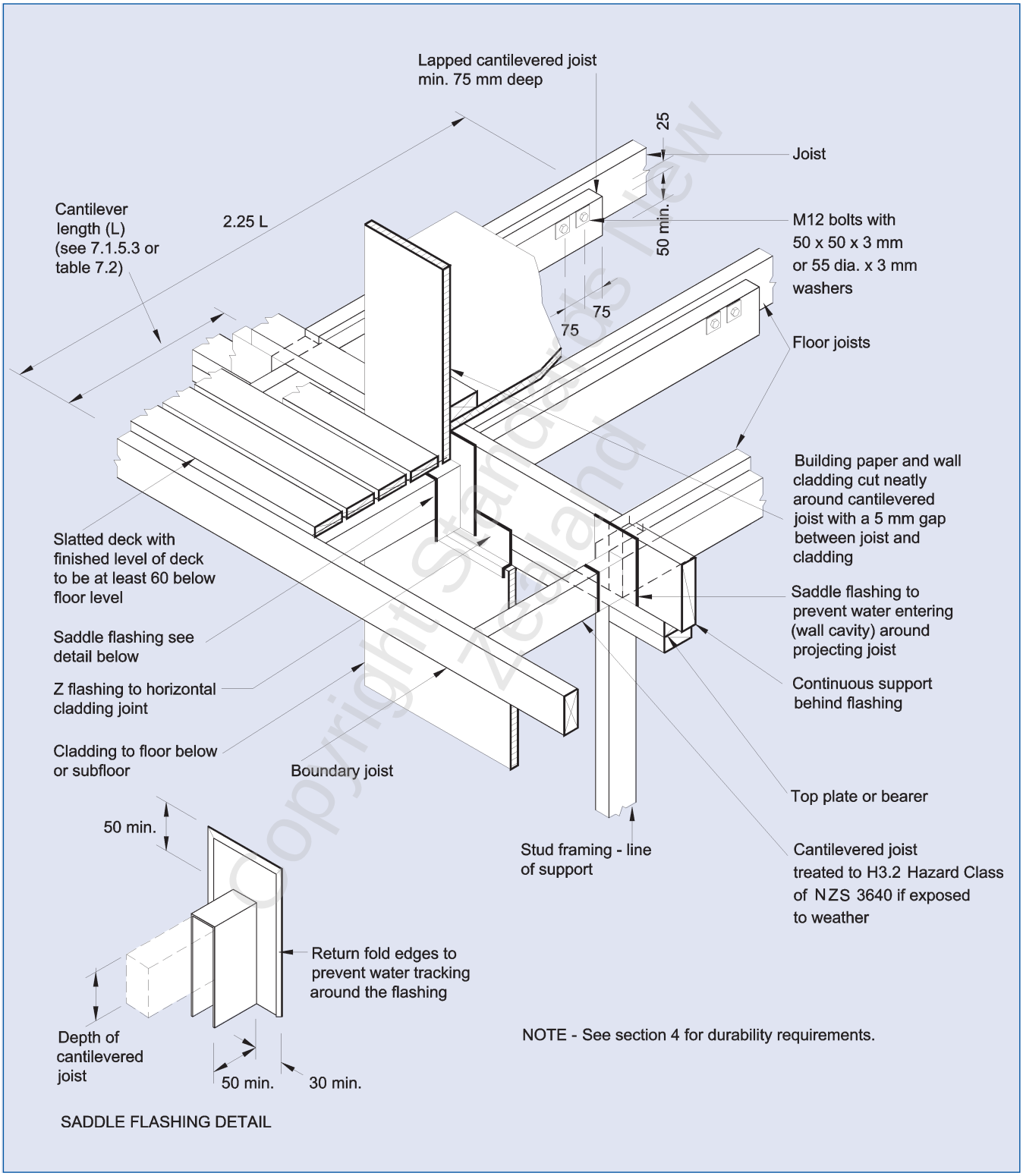

Amd 2
May '06

Figure 7.6 – Lapped cantilevered joists (stepped/notched) (see 7.1.5.3)

© The Crown in right of New Zealand, administered by the New Zealand Standards Executive. Access to this standard has been sponsored by the Ministry of Business, Innovation, and Employment under copyright license LN001498. You are not permitted to reproduce or distribute any part of this standard without prior written permission from Standards New Zealand, on behalf of New Zealand Standards Executive, unless your actions are covered by Part 3 of the Copyright Act 1994.

7.1.6.2
Trimmers shall be the same depth as the *curtailed joists* and for:

(a) *Trimmer* spans not exceeding 1.8 m: 25 mm thicker than the *curtailed joists*;

(b) *Trimmer* spans not exceeding 2.4 m: 50 mm thicker than the *curtailed joists.*

7.1.6.3
Trimming joists shall be the same depth as the *curtailed joists* and for:

(a) *Trimmer* spans not exceeding 1.8 m:

(i) *Trimming joist* spans not exceeding 3 m: 25 mm thicker than the *curtailed joists*;

(ii) *Trimming joist* spans exceeding 3 m: 50 mm thicker than the *curtailed joists*;

(b) *Trimmer* spans not exceeding 2.4 m: 50 mm thicker than the *curtailed joists*.

7.1.6.4
Curtailed joists shall be attached to *trimmers* as follows:

(a) Only *curtailed joist* spans not exceeding 3 m: By not fewer than 3/100 x 3.75 mm nails through the *trimmer* and extending not less than 50 mm into the ends of the *curtailed joists*; or

(b) By a connector having a *capacity* of:

(i) *Curtailed joist* spans not exceeding 1.8 m: 2.7 kN;

(ii) *Curtailed joist* spans not exceeding 3 m: 4.5 kN.

7.1.6.5
Trimmers shall be fixed to *trimming joists* as follows:

(a) By a half housing not less than 25 mm deep and fixed with 3/100 x 3.75 mm nails (see figure 7.7); or

(b) By a connector having a *capacity* of:

(i) *Trimmer* spans not exceeding 1.8 m: 5.3 kN;

(ii) *Trimmer* spans not exceeding 2.4 m: 7.6 kN.

7.1.7 *Holes and notches in floor joists*

C7.1.7
Layout of plumbing and drainage should be planned and detailed on the drawings so as to avoid drilling or notching joists.

7.1.7.1
Holes drilled in floor *joists* other than cantilevered *joists* shall be:

(a) Within the middle third of the depth of the *joist*; and

(b) Not more than 3 times the depth of the *joist* from the face of a support (see figure 7.8(A)).

7.1.7.2
Notches in floor *joists* other than cantilevered *joists* shall be not more than 450 mm from the face of a support; except that notches that do not reduce the effective depth of a *joist* to less than the minimum depth required by table 7.1 for the *joist* span concerned are permitted in any position (see figure 7.8(B)).

Copyright Standards New Zealand

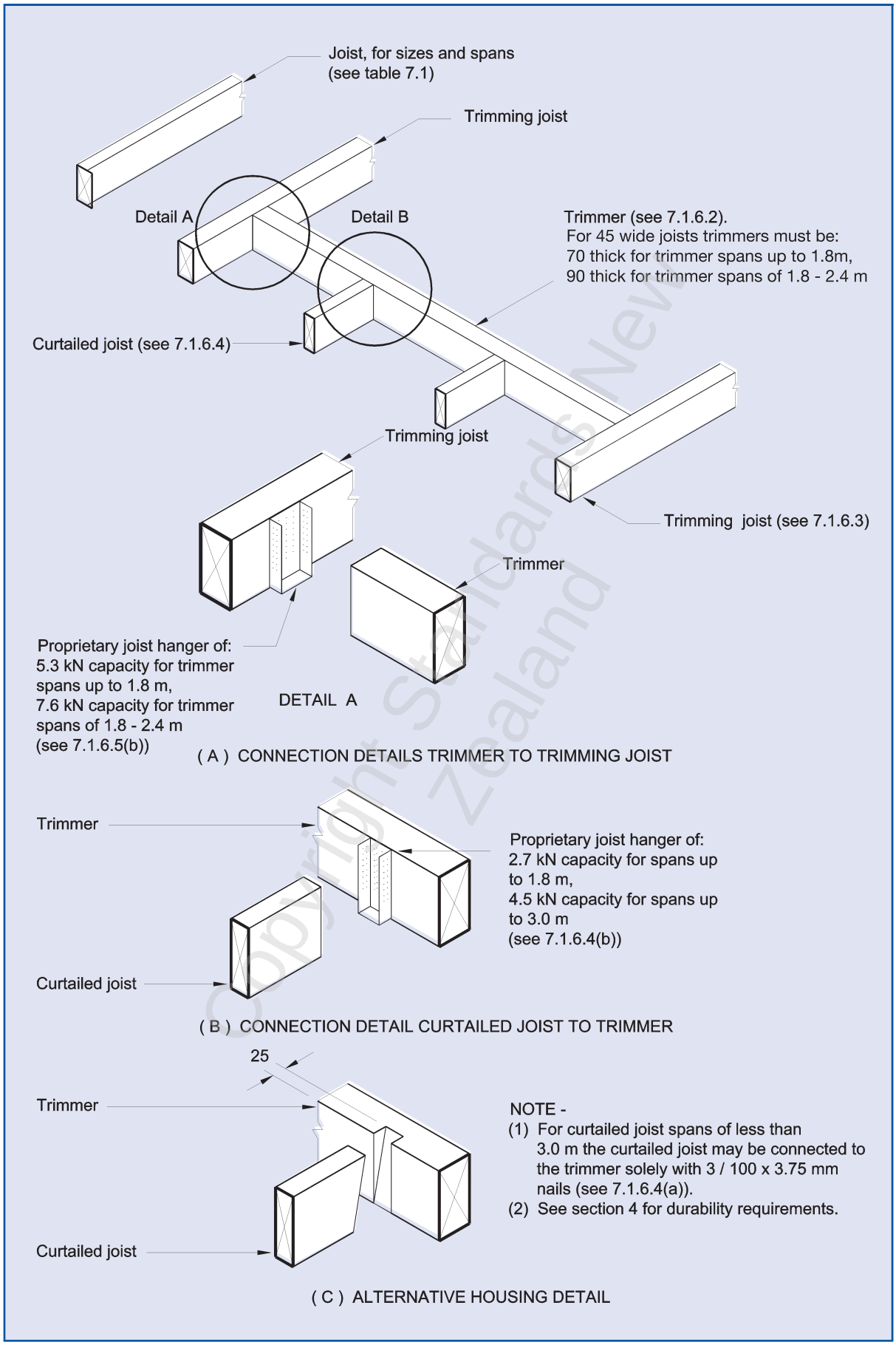

Figure 7.7 – Openings in floors (see 7.1.6.1)

© The Crown in right of New Zealand, administered by the New Zealand Standards Executive. Access to this standard has been sponsored by the Ministry of Business, Innovation, and Employment under copyright license LN001498. You are not permitted to reproduce or distribute any part of this standard without prior written permission from Standards New Zealand, on behalf of New Zealand Standards Executive, unless your actions are covered by Part 3 of the Copyright Act 1994.

© The Crown in right of New Zealand, administered by the New Zealand Standards Executive. Access to this standard has been sponsored by the Ministry of Business, Innovation, and Employment under copyright license LN001498. You are not permitted to reproduce or distribute any part of this standard without prior written permission from Standards New Zealand, on behalf of New Zealand Standards Executive, unless your actions are covered by Part 3 of the Copyright Act 1994.

7.1.7.3
Holes and notches shall be:

(a) Not more in diameter or depth than one-fifth the depth of the *joist* or 32 mm, whichever is the lesser;

(b) At minimum *spacing* measured along the *joist* between the edges of the holes or notches of not less than the depth of the *joist*.

See figure 7.8(C).

7.1.7.4
No holes or notches shall be drilled or cut in cantilevered *joists* except as permitted by 7.1.5.2.

7.2 Flooring

7.2.1 *Flooring installation*

Sufficient room shall be left around the exterior edge of flooring materials to allow for movement, resulting from changes in moisture content. For timber and timber based products this dimension shall be 6 mm to 10 mm (see figure 11.4).

7.2.2 *Timber strip flooring*

7.2.2.1
The minimum dry dressed thickness of tongued and grooved boards for timber strip flooring for 1.5 kPa and 2 kPa *floor loads* shall be as given by table 7.3 (and table 14.9 for 3 kPa *floor loads*).

7.2.2.2
Floor boards shall be laid in straight parallel lines at right angles to the *joists*, with tongues fitted into grooves and cramped tightly together.

7.2.2.3
Floor boards that do not have matching tongued and grooved ends shall be cut square on ends and butted tightly together at end joints. End joints shall be made over *joists*, and end joints in adjacent boards shall be staggered.

Table 7.3 – Flooring (see 7.2.2.1)

1.5 kPa and 2 kPa floor loads

Maximum spacing of joists	Minimum dry dressed thickness of tongued and grooved strip flooring of species listed below as:	
	Type A	Type B
(mm)	(mm)	(mm)
400	16	16
450	19	16
600	22	19
Type A timbers:	Radiata pine, matai, rimu, red beech, silver beech, douglas fir, larch.	
Type B timbers:	Tawa, hard beech, jarrah, karri, blackbutt, tallowwood.	

Copyright Standards New Zealand

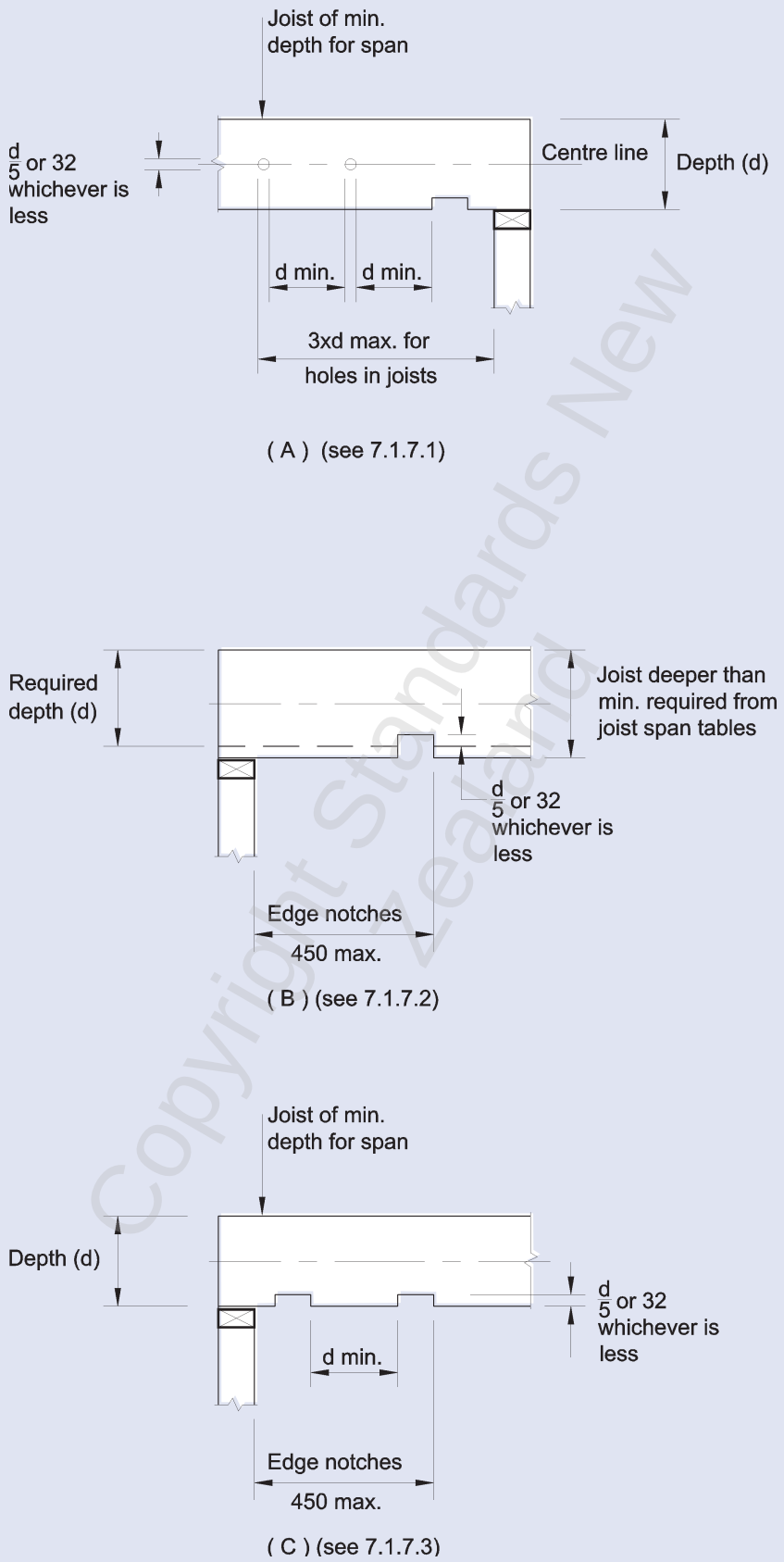

Figure 7.8 – Holes and notches in floor joists other than cantilevered joists (see 7.1.7)

© The Crown in right of New Zealand, administered by the New Zealand Standards Executive. Access to this standard has been sponsored by the Ministry of Business, Innovation, and Employment under copyright license LN001498. You are not permitted to reproduce or distribute any part of this standard without prior written permission from Standards New Zealand, on behalf of New Zealand Standards Executive, unless your actions are covered by Part 3 of the Copyright Act 1994.

Copyright Standards New Zealand

© The Crown in right of New Zealand, administered by the New Zealand Standards Executive. Access to this standard has been sponsored by the Ministry of Business, Innovation, and Employment under copyright license LN001498. You are not permitted to reproduce or distribute any part of this standard without prior written permission from Standards New Zealand, on behalf of New Zealand Standards Executive, unless your actions are covered by Part 3 of the Copyright Act 1994.

7.2.2.4
Floor boards that have matching tongue and grooved ends shall have tongues fitted into grooves and butted tightly together at end joints. End joints need not be made over *joists* provided that:

(a) Each unjointed length of board shall be supported by 2 or more *joists*;

(b) In any span between *joists* there shall be 2 or more unjointed boards between end jointed boards.

7.2.2.5
Floor boards shall be fixed to each *joist*. Nails shall be well punched to allow for subsequent sanding and stopping. Nails shall be skew driven through tongues profiled for secret nailing. Nails shall be punched to allow full entry of the tongue into the groove.

7.2.3 *Wood-based sheet flooring*

7.2.3.1
Sheet flooring materials of timber or wood-based products shall comply with 4.3.

7.2.3.2
Sheet flooring material shall to the greatest possible extent be laid in complete sheets.

7.2.3.3
Joints in sheet flooring material shall be made over supports. 90 mm x 45 mm timbers fixed on edge between *joists*, with their top surfaces set to a common level, shall be provided as necessary for this purpose. See figure 7.9.

7.2.3.4
Each sheet shall be fastened along each edge to *framing* or *blocking* members and shall also be fastened to every intermediate *framing* member. Fastenings shall be not less than 10 mm from sheet edges.

7.2.3.5 ***Structural plywood flooring***
Structural plywood flooring manufactured to AS/NZS 2269 shall be:

(a) Radiata pine plywood CD grade stress levels (F11) of the thickness given in table 7.4 for 1.5 kPa and 2 kPa (and table 14.16 for 3 kPa *loads*);

(b) Fixed with its face grain running across *joists*.

Table 7.4 – Structural plywood flooring (see 7.2.3.5)

1.5 kPa and 2 kPa floor loads

Maximum spacing of joists	Minimum thickness of plywood for floor loads
(mm)	(mm)
400	15
450	15
600	19

Copyright Standards New Zealand

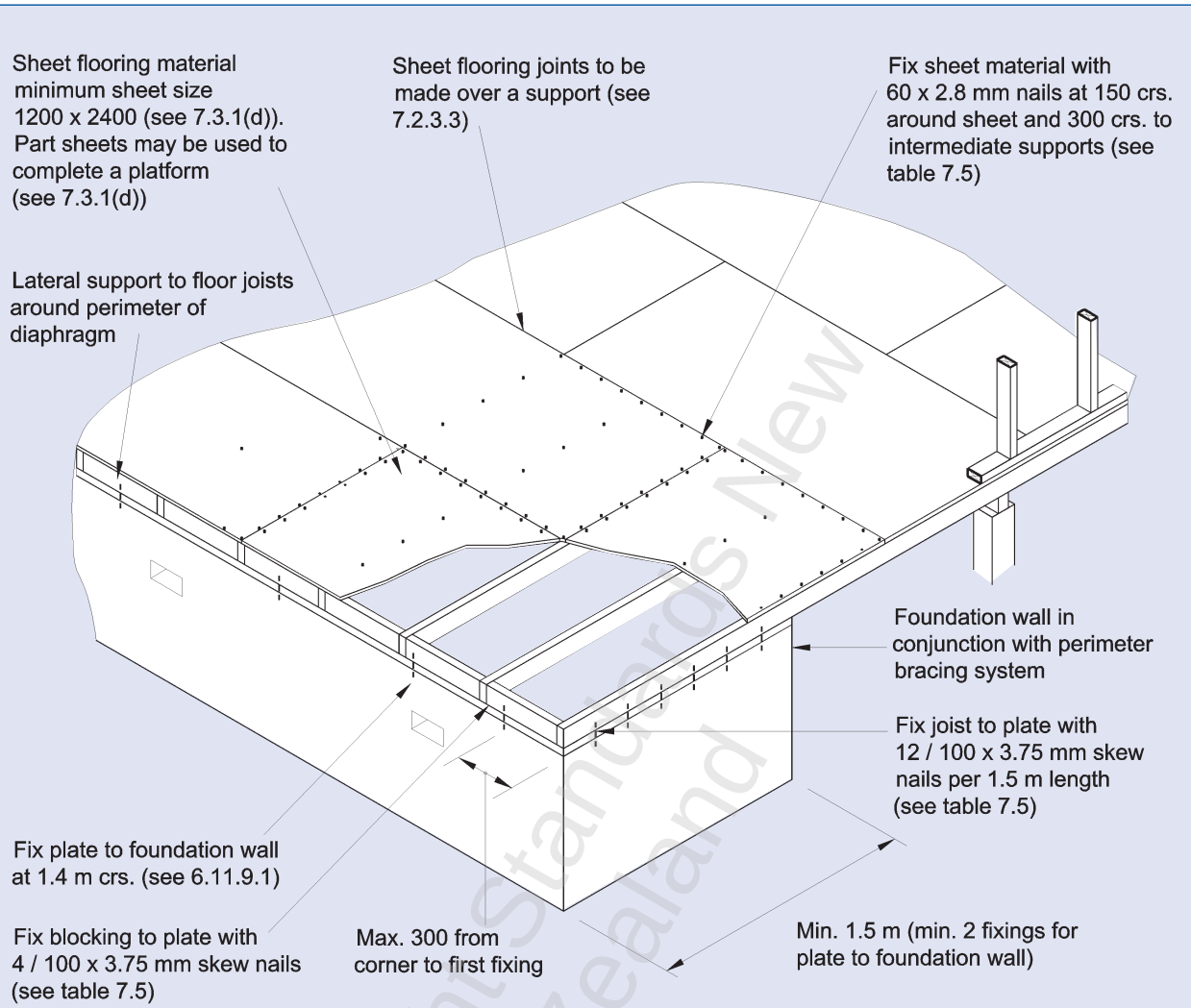

NOTE -
(1) Floor diaphragm to cover entire floor area (see 7.3.1(c)).
(2) Diaphragm size for (see 7.3.1(b)):
(a) Single storey maximum length must not be greater than 2.5 times the width.
(b) Double storey maximum length must not be greater than 2.0 times the width.
(3) See section 4 for durability requirements.

Figure 7.9 – Floor diaphragms (see 7.3)

Copyright Standards New Zealand

© The Crown in right of New Zealand, administered by the New Zealand Standards Executive. Access to this standard has been sponsored by the Ministry of Business, Innovation, and Employment under copyright license LN001498. You are not permitted to reproduce or distribute any part of this standard without prior written permission from Standards New Zealand, on behalf of New Zealand Standards Executive, unless your actions are covered by Part 3 of the Copyright Act 1994.

© The Crown in right of New Zealand, administered by the New Zealand Standards Executive. Access to this standard has been sponsored by the Ministry of Business, Innovation, and Employment under copyright license LN001498. You are not permitted to reproduce or distribute any part of this standard without prior written permission from Standards New Zealand, on behalf of New Zealand Standards Executive, unless your actions are covered by Part 3 of the Copyright Act 1994.

7.3 Structural floor diaphragms

7.3.1

Floor *diaphragms* required to comply with 5.6 shall be constructed in accordance with figure 7.9 and as follows:

Diaphragms shall have a maximum length of 15 m and the following limitations:

(a) The length and width of a *diaphragm* shall be between supporting *bracing lines* at right angles to each other;

(b) Any *diaphragm* or part of a *diaphragm* shall have a length not exceeding 2.5 times its width for single *storey* buildings, and a length not exceeding 2.0 times its width for 2 *storey* buildings;

(c) The flooring shall consist of a sheet material complying with 7.2.3 over the entire area of the *diaphragm*;

(d) The minimum sheet size shall be 2400 mm x 1200 mm except where the building dimensions prevent the use of a complete sheet;

(e) Floor *joists* in a structural floor *diaphragm* shall be laterally supported around the entire perimeter of the *diaphragm* in accordance with 7.1.2.2(a) or as shown in figure 7.9;

(f) The *joist* to *plate*, and *blocking* to *plate* and blocking to *stringer* connections shall be as in table 7.5.

7.3.2

Where it is necessary to subdivide a floor into more than one *diaphragm* so as to comply with 7.3.1(a) and (b), one wall can be used to support the edges of 2 *diaphragms*.

7.3.3 *Ground floor diaphragms*

The entire perimeter of the ground floor *diaphragm* for:

(a) Single *storey* and 2 *storey* buildings complying with 5.4.3.2(b) buildings shall be supported by either a continuous *foundation wall*, or an evenly distributed perimeter *bracing* system;

(b) Two *storey* buildings shall be directly supported by a continuous *foundation wall,* as specified by 5.4.3.2(a).

7.3.4 *Upper floor diaphragms*

The entire perimeter of:

(a) An upper floor *diaphragm* shall be located over, and connected to walls containing the number of *bracing* units required by 5.6.2.

(b) The first floor *diaphragm* of a 3 *storey* building shall be supported by a full *storey* height reinforced concrete masonry wall to NZS 4229.

C7.3.1

A floor diaphragm permits wider spacing of bracing lines below the floor, but has no effect on bracing line (wall) spacing above the floor.

Amd 1 Dec '00

Copyright Standards New Zealand

© The Crown in right of New Zealand, administered by the New Zealand Standards Executive. Access to this standard has been sponsored by the Ministry of Business, Innovation, and Employment under copyright license LN001498. You are not permitted to reproduce or distribute any part of this standard without prior written permission from Standards New Zealand, on behalf of New Zealand Standards Executive, unless your actions are covered by Part 3 of the Copyright Act 1994.

7.4 Timber decks

7.4.1 *General*

7.4.1.1
This section shall be used for decks supported from the main part of the building and which are not more than 3.0 m high measured from the lowest *cleared ground level* to the upper surface of the decking.

7.4.1.2
Timber decks covered by this Standard shall be designed for 2 kPa *floor loads* as follows:

(a) Decking shall be as given by 7.4.3;

(b) *Joists* shall be as in table 7.1(b);

(c) *Bearers* shall be as in table 6.6B;

(d) *Piles and footings* shall be as given in section 6;

(e) *Stringers* connected to the building, where used, shall be as in table 6.7 and 6.13 or, if connected to the building's timber *framing* shall be fixed with M12 bolts at *spacings* as in table 6.7 (see section 4 for Durability requirements);

(f) Where the decking surface is more than 1000 mm above the ground a barrier constructed in accordance with Acceptable Solution B1/AS2 in the Compliance Document for clause B1 of the NZBC shall be provided. Amd 2 May '06

7.4.2 *Bracing*

7.4.2.1
Decks with *stringers* and/or *joists* bolted to the building on one or more sides and which project no more than 2 m from the building, do not require *subfloor bracing*.

7.4.2.2
Decks which project more than 2 m from the building shall have *subfloor bracing* provided by *anchor* and/or *braced piles,* at half the *bracing demand* required by table 5.8 for "light/light/light" *cladding*, for 0° roof slope and for "*foundation* structures".

7.4.3 *Decking*

The thickness of the decking shall be not less than:

(a) 32 mm for 600 mm *joist* centres; or

(b) 19 mm for 450 mm *joist* centres.

7.4.4 *Surface*

Deck surfaces that provide access to a building shall have a slip resistance not less than 0.4 when wet. Demonstration of having achieved this slip resistance shall be to the satisfaction of the *Building Consent Authority*.

C7.4.4
Uncoated profiled timber has a slip resistance from 0.45 – 0.60 across the direction of travel. Uncoated smooth timber has a slip resistance of 0.20 – 0.35 (i.e. it does not meet the requirements of this clause).

Copyright Standards New Zealand

© The Crown in right of New Zealand, administered by the New Zealand Standards Executive. Access to this standard has been sponsored by the Ministry of Business, Innovation, and Employment under copyright license LN001498. You are not permitted to reproduce or distribute any part of this standard without prior written permission from Standards New Zealand, on behalf of New Zealand Standards Executive, unless your actions are covered by Part 3 of the Copyright Act 1994.

7.5 Concrete slab-on-ground floors for timber buildings

7.5.1 *General*

Amd 1 Dec '00

This clause sets down requirements for concrete slab-on-ground floors with maximum dimension 24 m either way between *free joints*, or between *free joints* and the slab edge, for an occupancy loading of up to 3 kPa. Slabs exceeding the maximum dimension are outside the scope of this Standard and require *specific engineering design*. (See 7.5.8.5).

C7.5.1

The various spacings for construction and shrinkage control joints are set out in clause 7.5.8.6. Other useful information can be found in BRANZ publication "Good Concrete Floors and Basements Practice".

Slabs longer than 24 m may be constructed provided they are comprised of sections separated by free joints.

Amd 1 Dec '00

7.5.2 *Finished floor levels and foundation edge construction*

7.5.2.1

The finished concrete floor level of a slab-on-ground floor shall be a minimum height above the *ground level* as follows:

(a) Where the adjoining ground is protected by permanent paving:

(i) Masonry veneer exterior wall covering: 100 mm where the adjoining ground adjacent to the permanent paving is at least 150 mm below floor level;

(ii) Any other exterior wall covering: 150 mm; or,

(b) Where the adjoining ground is not protected by permanent paving:

(i) Masonry veneer exterior wall covering: 150 mm;

(ii) Any other exterior wall covering: 225 mm.

See figure 7.10.

7.5.2.2

The *finished ground level* adjoining the concrete slab-on-ground shall be formed so as to carry water away from the building, at a slope of not less than 1 in 25, for a distance of at least 1 m from the building. Where site conditions do not readily allow such a 1 m wide strip to be formed, then permanent paving shall be laid to the falls and dimensions shown in figure 7.11.

C7.5.2.2

From a practical point of view, to give easier access, widening the drainage channel from 400 mm to 600 mm is recommended.

7.5.2.3

The combined *foundation* and edge details shall be constructed as shown in figures 7.12 and 7.13 (and figures 7.14 and 7.15 for *foundation* supporting a masonry veneer).

C7.5.2.3

The information contained in the figures is drawn from other sections of this Standard. Dimensions and reinforcement are contained in section 6.

Copyright Standards New Zealand

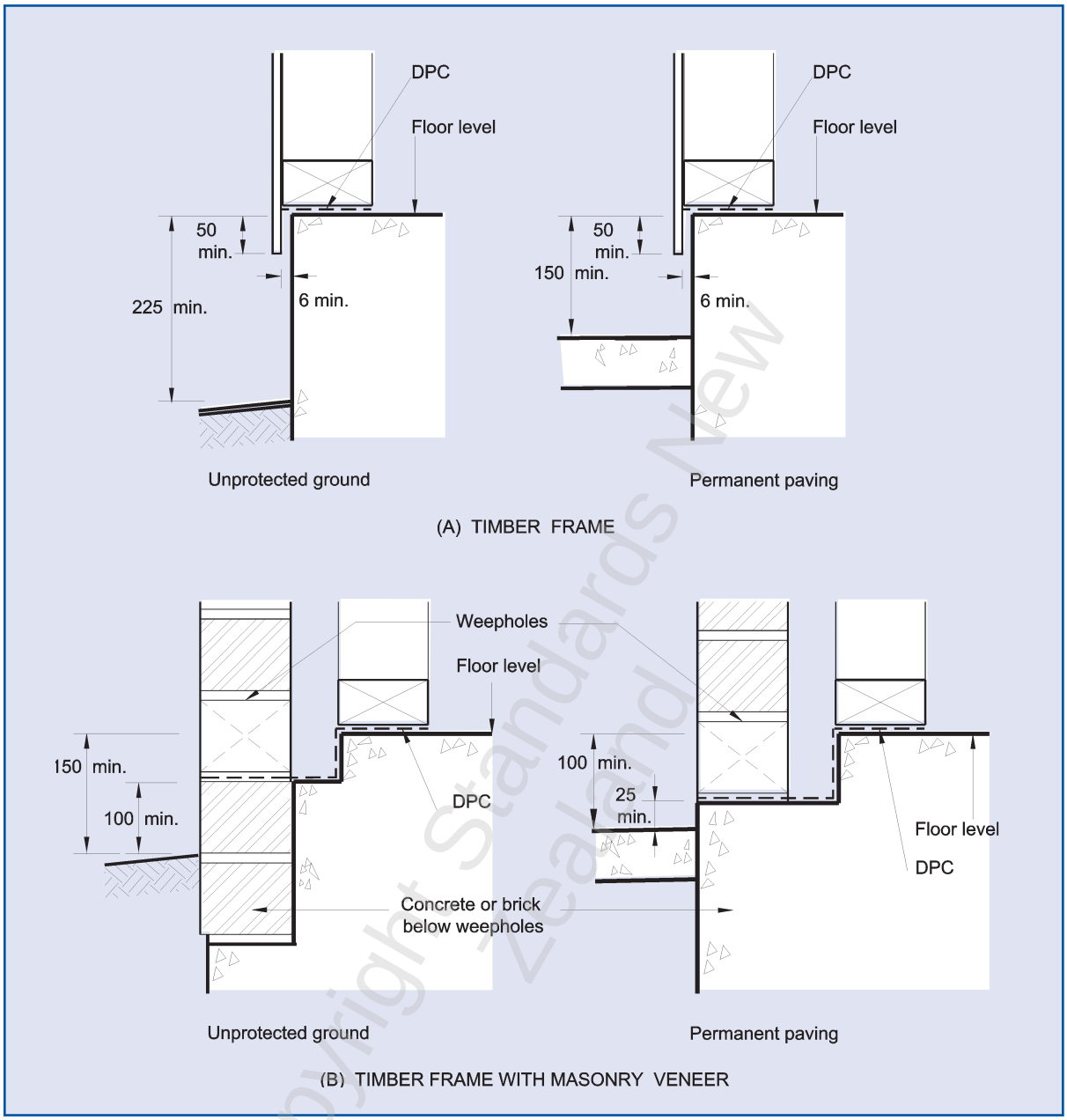

Figure 7.10 – Minimum heights of finished concrete (residential, habitable) slab-on-ground floors above adjoining finished ground level (see 7.5.2.1)

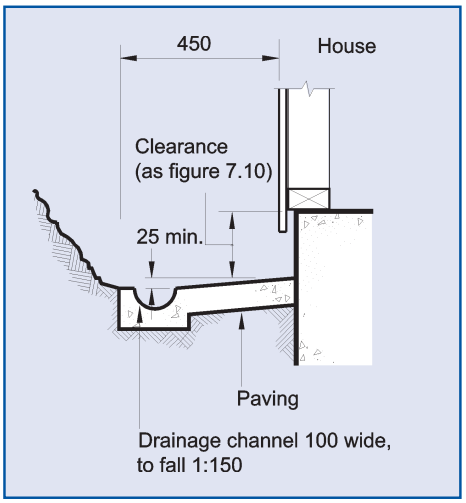

Figure 7.11 – Provision of permanent paving adjoining buildings with concrete slab-on-ground floors (see 7.5.2.3)

© The Crown in right of New Zealand, administered by the New Zealand Standards Executive. Access to this standard has been sponsored by the Ministry of Business, Innovation, and Employment under copyright license LN001498. You are not permitted to reproduce or distribute any part of this standard without prior written permission from Standards New Zealand, on behalf of New Zealand Standards Executive, unless your actions are covered by Part 3 of the Copyright Act 1994.

Copyright Standards New Zealand

© The Crown in right of New Zealand, administered by the New Zealand Standards Executive. Access to this standard has been sponsored by the Ministry of Business, Innovation, and Employment under copyright license LN001498. You are not permitted to reproduce or distribute any part of this standard without prior written permission from Standards New Zealand, on behalf of New Zealand Standards Executive, unless your actions are covered by Part 3 of the Copyright Act 1994.

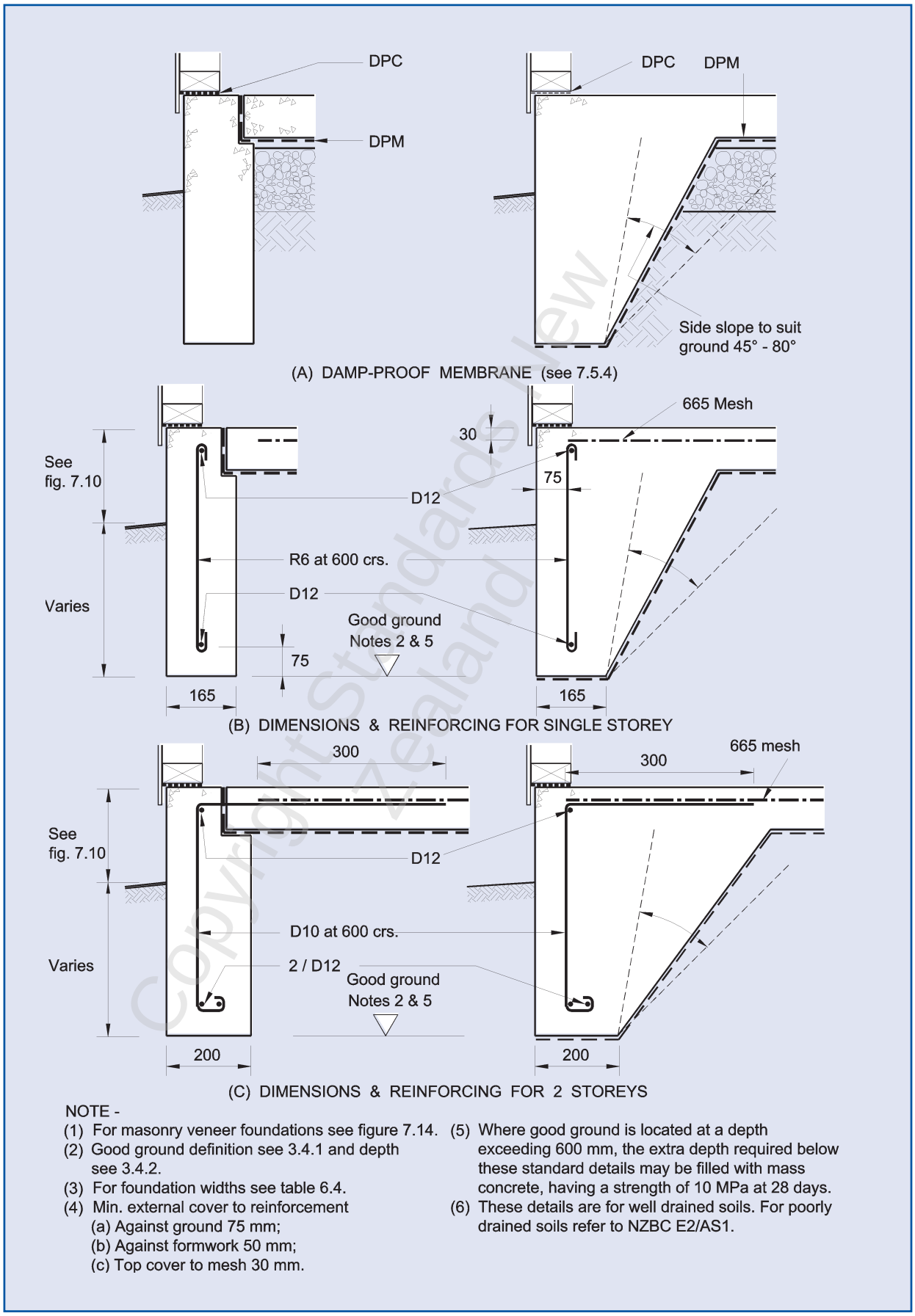

NOTE -

(1) For masonry veneer foundations see figure 7.14.

(2) Good ground definition see 3.4.1 and depth see 3.4.2.

(3) For foundation widths see table 6.4.

(4) Min. external cover to reinforcement
(a) Against ground 75 mm;
(b) Against formwork 50 mm;
(c) Top cover to mesh 30 mm.

(5) Where good ground is located at a depth exceeding 600 mm, the extra depth required below these standard details may be filled with mass concrete, having a strength of 10 MPa at 28 days.

(6) These details are for well drained soils. For poorly drained soils refer to NZBC E2/AS1.

Figure 7.12 – Foundation edge details – *In situ* concrete (see 7.5.2.3)

7.5.3 *Granular base*

7.5.3.1
Granular fill material complying with 7.5.3.2 shall be placed and compacted in layers of 150 mm maximum thickness, over the area beneath the proposed ground slab, so that the total thickness of granular base is not less than 75 mm nor more than 600 mm.

Compact each layer until the material is tightly bound together and does not visibly deform under the weight of a pressed adult heel.

Specific design is required if filling in excess of 600 mm.

C7.5.3.1
The maximum non-specific design depth of fill up to 600 mm has nothing to do with the compaction of the hardfill. Where fill is in excess of 600 mm, it will be necessary for a geotechnical engineer to investigate the underlying soils to a depth of approximately twice the width of the fill.

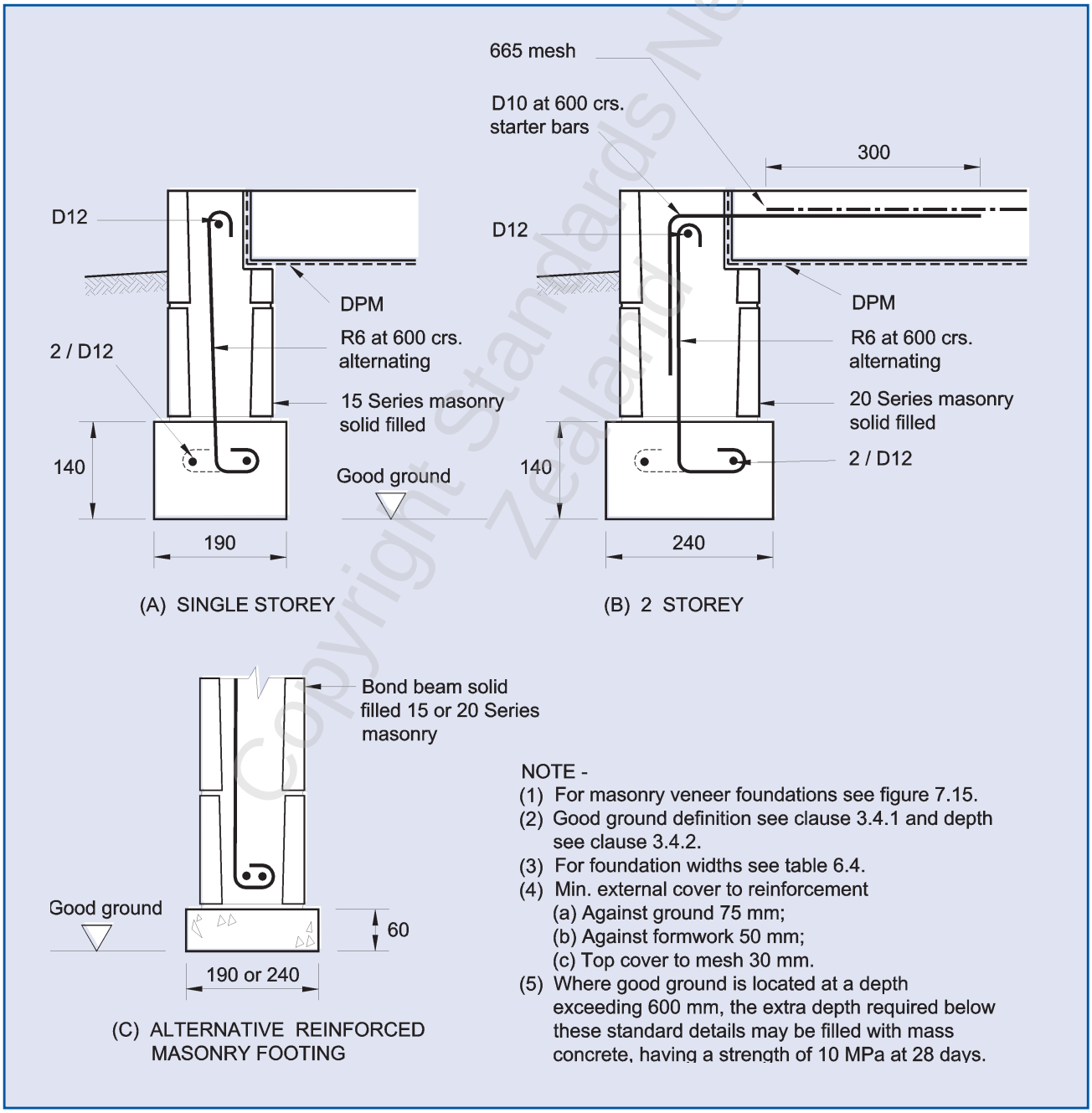

Figure 7.13 – Foundation edge details – Concrete masonry (see 7.5.2.3)

© The Crown in right of New Zealand, administered by the New Zealand Standards Executive. Access to this standard has been sponsored by the Ministry of Business, Innovation, and Employment under copyright license LN001498. You are not permitted to reproduce or distribute any part of this standard without prior written permission from Standards New Zealand, on behalf of New Zealand Standards Executive, unless your actions are covered by Part 3 of the Copyright Act 1994.

Copyright Standards New Zealand

© The Crown in right of New Zealand, administered by the New Zealand Standards Executive. Access to this standard has been sponsored by the Ministry of Business, Innovation, and Employment under copyright license LN001498. You are not permitted to reproduce or distribute any part of this standard without prior written permission from Standards New Zealand, on behalf of New Zealand Standards Executive, unless your actions are covered by Part 3 of the Copyright Act 1994.

C7.5.3.2
Proper grading of granular fill material is important. Excessively fine material such as sand will cause problems with drainage, capillary action, compaction and settlement and must be avoided.

7.5.3.2
Granular fill material shall be composed of rounded gravel, crushed rock, or scoria or material approved by the *Building Consent Authority* and:

(a) Not more than 5 % shall pass through a 2.2 mm sieve excepting conditions in 7.5.3.3;

(b) 100 % shall pass either:

(i) A 19 mm sieve for any fill thickness; or

(ii) A 37.5 mm sieve for a fill thickness exceeding 100 mm.

7.5.3.3
Where it can be demonstrated to the satisfaction of the *Building Consent Authority* that site conditions ensure that capillary water is unlikely to reach the underside of the slab, then the requirements of 7.5.3.2(a) can be waived.

7.5.3.4
The top surface of the granular base shall be a material that will not puncture the *DPM* required in 7.5.4.

7.5.4 *Damp-proof membrane*

C7.5.4.1
A minimum slab thickness of 50 mm is required to resist vapour pressure and protect the DPM. NZS 3604 also recognizes that "slabs work" without the requirement for an edge vapour barrier up to the face of the external slab edge. In essence, it works because the differential vapour pressure does not exist since there is a free air surface. However, because the edge does get wet from rain and the timber plate covers the slab from the air at that point, a DPC must be used between the plate and the concrete surfaces it covers.

7.5.4.1
Every slab-on-ground floor shall incorporate a continuous *damp-proof membrane* (*DPM*) between the ground and the floor surface (see figures 7.12 and 7.13). The *damp-proof membrane* shall either be laid:

(a) Beneath the concrete ground slab on a surface suitable to receive the type of *DPM* material being used; or

(b) Over the ground slab and be protected by a concrete slab not less than 50 mm thick.

C7.5.4.2
Various damp-proof membranes are available. Typical examples are polythene sheet, reinforced polyethylene sheet, bituminous sheets, asphalt and rubber emulsions.

7.5.4.2
The *damp-proof membrane* (*DPM*) shall comprise one or more of the materials given in clauses 7.5.5, 7.5.6 and 7.5.7 and shall:

(a) Have a water vapour flow resistance not less than 90 MNs/g when tested in accordance with ASTM E96, utilizing standard test conditions at 23 °C;

(b) Be sufficiently durable to resist damage from installation and normal worksite operations;

(c) Be laid on a surface that is unlikely to damage the *damp-proof membrane* being used; and

(d) Have penetrations by services, reinforcing or other objects sealed by taping, or by application of wet-applied *damp-proof membrane* material.

Copyright Standards New Zealand

7.5.4.3
The *damp-proof membrane* (*DPM*) shall abut any *damp-proof course* (*DPC*) used to protect timber in accordance with 2.3.3, or the *DPM* may extend to act as a *DPC* provided it is of suitable impervious material.

7.5.4.4
Damp-proof membrane materials shall be repaired or replaced as necessary, immediately before concrete is placed over them.

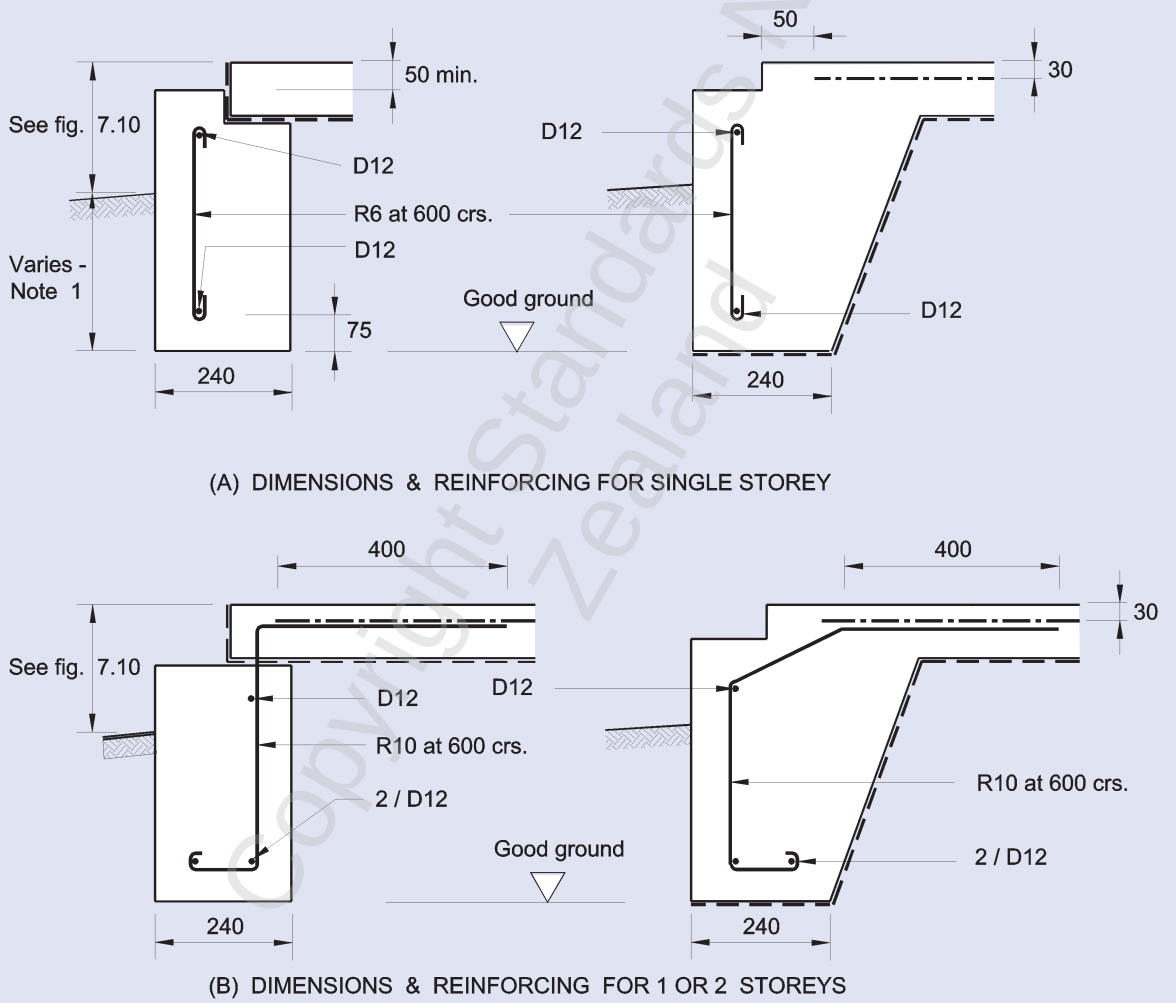

NOTE -
(1) Refer to 11.7 for requirements for masonry veneer foundation.
(2) Refer to figure 7.12 for other notes of relevance.
(3) When not cast integrally with, or tied to the foundation wall, the slab must be rebated or set down inside the wall by 50 mm.
(4) These details are for well drained soils. For poorly drained soils refer to NZBC E2/AS1.

Figure 7.14 – Masonry veneer foundation edge details –*In situ* concrete (see 7.5.2.3 and 11.7)

© The Crown in right of New Zealand, administered by the New Zealand Standards Executive. Access to this standard has been sponsored by the Ministry of Business, Innovation, and Employment under copyright license LN001498. You are not permitted to reproduce or distribute any part of this standard without prior written permission from Standards New Zealand, on behalf of New Zealand Standards Executive, unless your actions are covered by Part 3 of the Copyright Act 1994.

Copyright Standards New Zealand

© The Crown in right of New Zealand, administered by the New Zealand Standards Executive. Access to this standard has been sponsored by the Ministry of Business, Innovation, and Employment under copyright license LN001498. You are not permitted to reproduce or distribute any part of this standard without prior written permission from Standards New Zealand, on behalf of New Zealand Standards Executive, unless your actions are covered by Part 3 of the Copyright Act 1994.

7.5.5 *Bituminous sheet damp-proof membranes*

7.5.5.1
Bituminous sheet *DPM* material shall:

(a) Have a hessian or fibreglass core;

(b) Be not less than 3 mm thick;

(c) Have heat-bonded lap joints not less than 50 mm wide;

(d) Be protected from damage.

C7.5.5.1
Vertical faces cannot be exposed in any situation where the sheet might suffer damage.

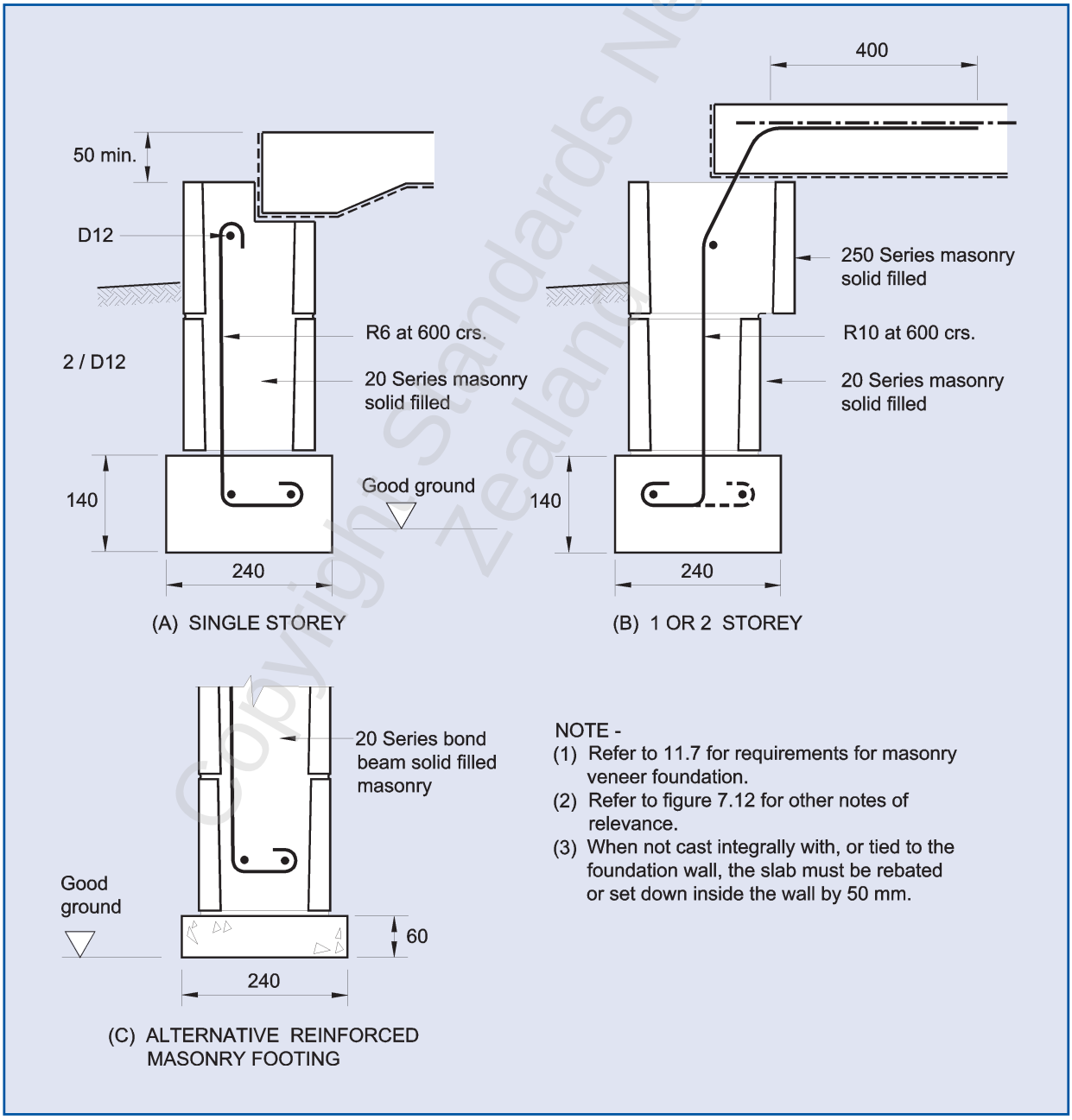

Figure 7.15 – Masonry veneer foundation edge details – Concrete masonry (see 7.5.2.3 and 11.7)

Copyright Standards New Zealand

© The Crown in right of New Zealand, administered by the New Zealand Standards Executive. Access to this standard has been sponsored by the Ministry of Business, Innovation, and Employment under copyright license LN001498. You are not permitted to reproduce or distribute any part of this standard without prior written permission from Standards New Zealand, on behalf of New Zealand Standards Executive, unless your actions are covered by Part 3 of the Copyright Act 1994.

7.5.5.2
Bituminous sheet *damp-proof membrane* material shall be laid over:

(a) A smooth-surfaced blinding layer not less than 10 mm cement sand slurry; or

(b) Heavyweight building paper.

7.5.6 *Polyethylene (polythene) sheet damp-proof membranes*

C7.5.6
Polyethylene is usually referred to as "polythene" in the New Zealand building industry.

7.5.6.1
Polyethylene sheet *DPM* material shall:

(a) Be either:

(i) A single unprotected layer of polyethylene not less than 0.25 mm thick; or

(ii) A multi-layer laminate, in which one or more layers of polyethylene having an aggregate thickness of not less than 0.1 mm thick are incorporated with layers of other material that provide adequate protection to the polyethylene;

(b) Have heat-sealed joints not less than 50 mm wide, or lap joints not less than 150 mm wide, sealed with pressure-sensitive plastic tape not less than 50 mm wide (such tape need not be used with self-sealing polyethylene sheets);

(c) Be protected from damage.

C7.5.6.1
Vertical faces cannot be exposed in any situation where the sheet might suffer damage.

7.5.6.2
Polyethylene sheet vapour barrier material shall be protected where the granular surface is likely to cause intrusions into the vapour barrier by:

(a) Surface blinded with sand to a nominal minimum thickness of 5 mm or a maximum thickness of 25 mm; or a

(b) Heavyweight building paper.

C7.5.6.2
The important issue is that the vapour barrier is not damaged by intrusions from below during the concreting operations.

Thick layers of uncompacted sand are an unsatisfactory support for the slab. A nominal 5 mm to 10 mm thickness of sand to fill gaps in the base course material plus a basecourse tolerance allowance of ±15 mm results in a maximum thickness of compacted sand of 25 mm.

7.5.7 *Rubber emulsion damp-proof membranes*

7.5.7.1
Rubber emulsion *DPM* material shall:

(a) Contain not less than 10 % rubber latex;

(b) Be applied in at least 2 coats at right angles to each other and in accordance with the manufacturer's specification, to the approval of the *Building Consent Authority*.

C7.5.7.1
The information supplied by the manufacturer should take account of the shrinkage cracking that will occur in the supporting concrete layer.

7.5.7.2
Rubber emulsion *DPM* material shall be laid on a layer of concrete not less than 50 mm thick.

Copyright Standards New Zealand

© The Crown in right of New Zealand, administered by the New Zealand Standards Executive. Access to this standard has been sponsored by the Ministry of Business, Innovation, and Employment under copyright license LN001498. You are not permitted to reproduce or distribute any part of this standard without prior written permission from Standards New Zealand, on behalf of New Zealand Standards Executive, unless your actions are covered by Part 3 of the Copyright Act 1994.

7.5.8 *Concrete slab-on-ground*

7.5.8.1
A concrete slab-on-ground slab shall be designed to the following:

Amd 1 Dec '00

(a) When supporting more than one *storey*, the slab shall be reinforced in accordance with clauses 7.5.8.3, 7.5.8.4 and 7.5.8.6.4.

(b) When supporting one *storey* the slab shall be selected from one of the following:

(i) Reinforced as in (a);

(ii) Unreinforced in accordance with clause 7.5.8.6.2;

(iii) Fibre reinforced in accordance with clause 7.5.8.6.3.

7.5.8.2 *Slab thickness*
Except as required by 7.5.9 beneath *loadbearing walls*, the minimum thickness of a slab for buildings constructed to this Standard shall be (see figure 7.16):

(a) 100 mm when placed on a bituminous or polyethylene sheet *DPM* laid on a specifically prepared granular base;

(b) 75 mm when:

(i) Laid on rubber emulsion *DPM* when placed on 50 mm of concrete;

(ii) Vapour barrier laid over the floor and protected by 50 mm of concrete topping.

Copyright Standards New Zealand

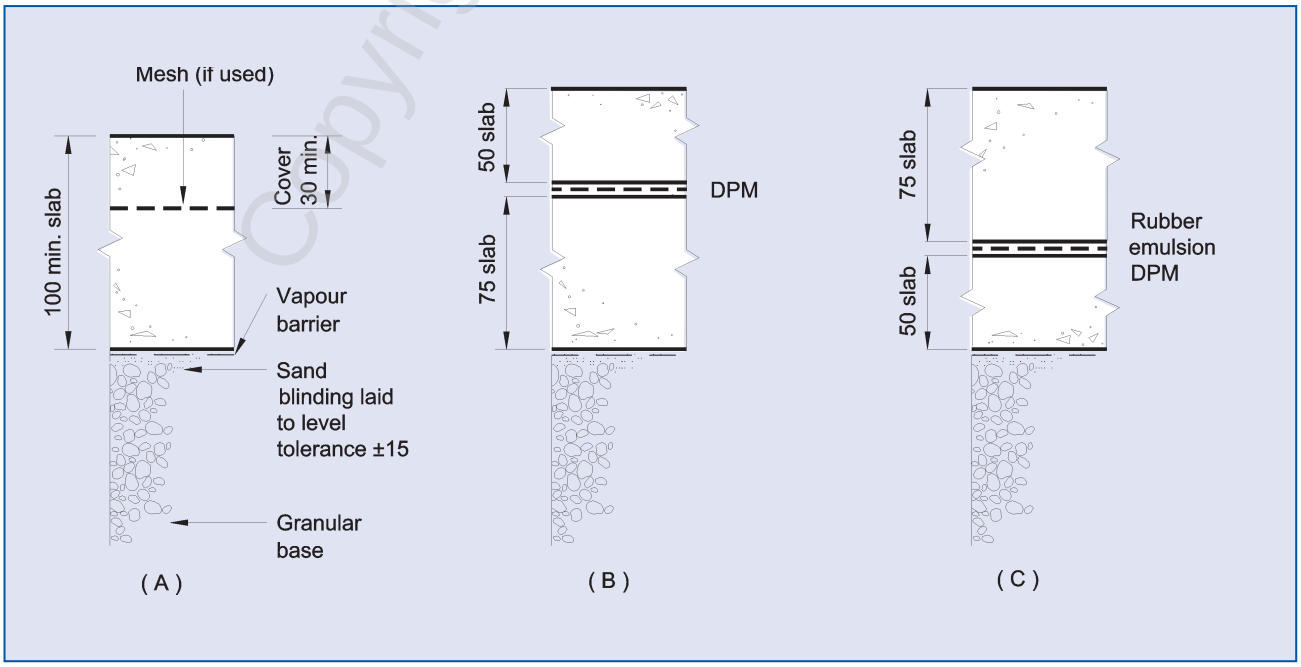

Figure 7.16 – Construction of ground slabs (see 7.5.8.2)

© The Crown in right of New Zealand, administered by the New Zealand Standards Executive. Access to this standard has been sponsored by the Ministry of Business, Innovation, and Employment under copyright license LN001498. You are not permitted to reproduce or distribute any part of this standard without prior written permission from Standards New Zealand, on behalf of New Zealand Standards Executive, unless your actions are covered by Part 3 of the Copyright Act 1994.

C7.5.8.3
665 mesh will comply with this requirement.

Alternative forms of evenly spaced symmetrical mesh may be used providing they meet the mass/m in each direction. Equivalent bar steel may be used using D10 bars at 350 centres, but mesh is preferred.

7.5.8.3
Ground slab reinforcing shall extend to within 75 mm of the outside edge of the slab (including the *foundation wall* when it is cast integrally with the ground slab) and shall consist of a minimum of 2.27 kg/m^2 welded steel mesh for slabs 12 m to 24 m long or 1.29 kg/m^2 welded steel mesh for slabs no longer than 12 m between *free joints* or edges. *Free joints* are joints that have no reinforcement passing through the joint that links both sides and no bonding between vertical concrete faces. Bonding shall be prevented with building paper or a bituminous coating. Mesh sheets shall be lapped by 225 mm at sheet joints.

Reinforcing mesh shall comply with AS/NZS 4671. Amd 1 Dec '00

7.5.8.4
Reinforcing steel shall have a cover of 30 mm minimum from the top surface of the ground slab and shall be placed in such a manner as to avoid damage to the *DPM*.

C7.5.8.5
In the controlled applications set out in this Standard, minor shrinkage cracking is of no structural consequence. However, care should be taken to follow the bay size requirements to ensure shrinkage cracking does not appear in areas where special thin or hard finishes are to be applied, e.g. vinyl sheeting or ceramic/stone tiles.

7.5.8.5 ***Slab dimensions***
Slabs may be of unlimited size provided the requirements of 1.1.2(n) and 7.5.1 are met. Amd 1 Dec '00

7.5.8.6 ***Shrinkage control joints***

C7.5.8.6.1
Typically the depth of cut will be 25 mm with a single saw blade width of approximately 5 mm. Special techniques may be used to cut the joints in the concrete's plastic state.

7.5.8.6.1 ***General***
Shrinkage control joints shall either be formed by saw cutting the slab after it has hardened, or by casting-in a crack inducer into the slab. Crack inducer placement shall not damage the *DPM*. The inducer or saw cuts shall extend to a quarter of the depth of the slab. Saw cutting shall take place no later than 24 hours for average ambient temperatures above 20 °C, and 48 hours for average ambient temperatures below 20 °C. Amd 1 Dec '00

C7.5.8.6.2
The position of special finishes to be laid over the floor should be considered when determining the joint layout.

7.5.8.6.2 ***Unreinforced concrete slabs***
Location of shrinkage control joints in unreinforced concrete slabs shall comply with the following criteria:

(a) Panels formed shall have a maximum ratio of length: width of 1.3:1. Any panels formed which exceed this value shall be reinforced as specified in 7.5.8.3.

(b) The maximum plan dimension of concrete between construction joints, or shrinkage control joints is 3 m;

(c) Supplementary steel placed as shown in figure 7.17 but not across shrinkage control joints.

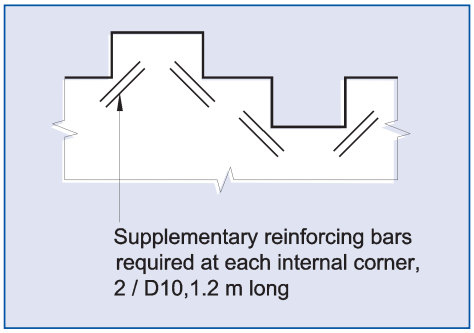

Figure 7.17 – Irregular slab (plan view) (see 7.5.8.6.2)

Copyright Standards New Zealand

© The Crown in right of New Zealand, administered by the New Zealand Standards Executive. Access to this standard has been sponsored by the Ministry of Business, Innovation, and Employment under copyright license LN001498. You are not permitted to reproduce or distribute any part of this standard without prior written permission from Standards New Zealand, on behalf of New Zealand Standards Executive, unless your actions are covered by Part 3 of the Copyright Act 1994.

7.5.8.6.3 ***Fibre reinforced slabs: polypropylene***

Where normal unreinforced concrete slabs are constructed with the addition of polypropylene fibres, the following shall apply:

(a) Minimum fibre dosage rate shall be 0.7 kg/m^3;

(b) The maximum joint *spacing* given in 7.5.8.6.2 can be increased up to 4.0 m;

(c) The bay dimensions formed by either construction or shrinkage control joints shall be limited to a maximum ratio of length: width of 1.5:1. Any panels formed which exceed this value shall be reinforced as specified in 7.5.8.3.

(d) Supplementary steel shall be placed as shown in figure 7.17;

(e) The mixing of fibres and construction of the slab shall be strictly in accordance with the supplier's specifications.

C7.5.8.6.3

Specific design or approved polypropylene producer statements may permit alternative bay sizes, using different types of polypropylene fibre and dosage rates. Steel fibre concrete slabs may be used, but they are the subject of specific design and the approval of the Building Consent Authority.

7.5.8.6.4 ***Reinforced concrete slabs***

Shrinkage control joints in reinforced concrete ground slabs shall comply with the following criteria:

(a) Shrinkage control joints shall be positioned to coincide with major changes of plan. See figure 7.18.

(b) Supplementary steel shall be placed as shown in figure 7.17 but not across shrinkage control joints;

(c) Supplementary shrinkage control joints shall be used such that intermediate bay sizes do not exceed 6 m for slabs where there is exposed concrete;

(d) The bay dimensions formed by either construction or shrinkage control joints shall be limited to a maximum ratio of length:width of 2:1.

C7.5.8.6.4

The slab reinforcement and control joints provided will not totally eliminate the formation of non-structural shrinkage cracks.

C7.5.8.6.4(c)

It is recommended that intermediate bays do not exceed 6 m for slabs where decorative finishes such as vinyl or ceramic tiles are being used. Where significant areas of exposed concrete, vinyl and ceramic tiles are to be used, specific engineering design is recommended which would consider reducing the maximum bay dimension and the preference to produce a bay shape which is approximately square.

7.5.8.7 ***Concrete strength***

Concrete strength shall follow the provisions of 6.11.6.1 and 4.8.2.

C7.5.8.7

Note the minimum strength requirements only relate to buildings covered by this Standard. Special provisions are required for commercial and industrial applications.

7.5.9 *Bearing*

7.5.9.1

Clause 3.4.2 shall apply to the *foundation walls* but not to the ground slab itself. The depth shall be measured from the *cleared ground level* outside the *foundation wall* and not from the *cleared ground level* beneath the ground slab.

7.5.9.2

Bearing of *footings* on *good ground* shall be as required in 3.1.2. Bearing of the granular fill for the ground slab itself need not be on *good ground* except where the following is encountered at formation level.

(a) Organic topsoil;

Copyright Standards New Zealand

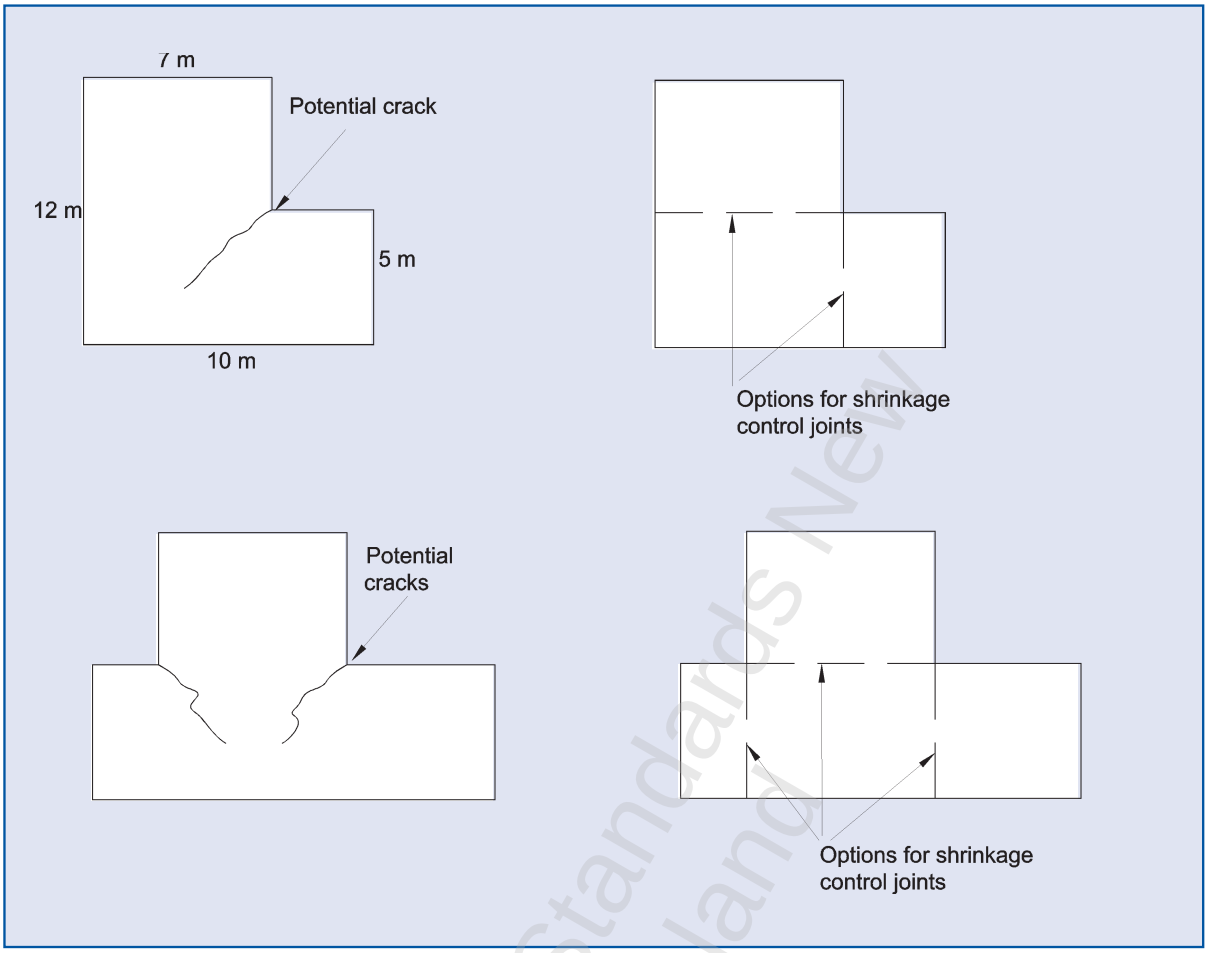

Figure 7.18 – Shrinkage control joints (see 7.5.8.6.4)

(b) Soft or very soft peat;

(c) Loose uncompacted sand;

(d) Fill material without a "Statement of Suitability" in terms of NZS 4431;

(e) Expansive clay as 3.2.1.2.

7.5.10 *Underfloor thermal insulation*

Thermal insulating material may be used provided that there is no reduction of any dimension given by this Standard.

7.5.11 *Support of internal loadbearing walls*

7.5.11.1

All *internal loadbearing walls* except those of a single *storey* building supporting only a *roof* shall be supported on a slab thickening complying with 7.5.11.2.

7.5.11.2

A slab thickening shall be 200 mm thick over a minimum width of 300 mm and reinforced with 2/D12 bars as shown in figure 7.19.

© The Crown in right of New Zealand, administered by the New Zealand Standards Executive. Access to this standard has been sponsored by the Ministry of Business, Innovation, and Employment under copyright license LN001498. You are not permitted to reproduce or distribute any part of this standard without prior written permission from Standards New Zealand, on behalf of New Zealand Standards Executive, unless your actions are covered by Part 3 of the Copyright Act 1994.

Copyright Standards New Zealand

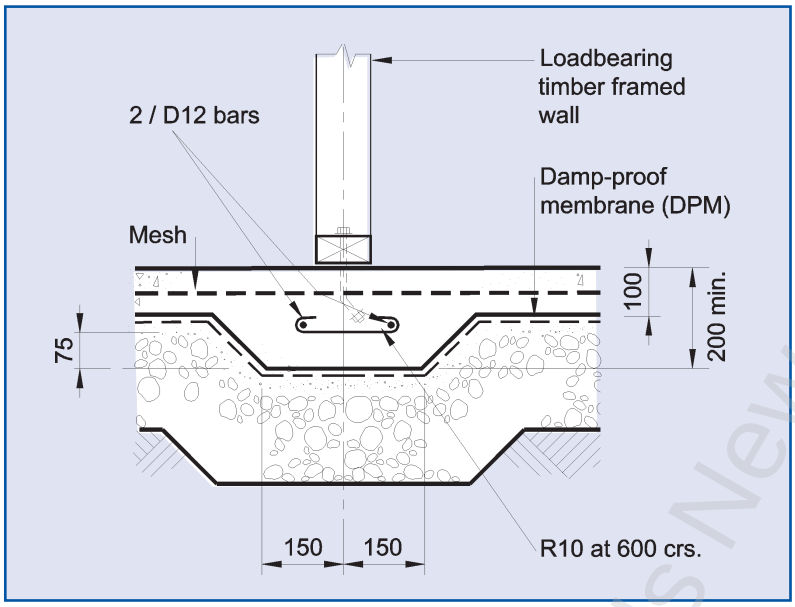

Figure 7.19 – Ground slabs beneath internal loadbearing walls (see 7.5.11.2)

7.5.12 *Fixing of timber*

7.5.12.1
Framing timbers shall be fixed to slab-on-ground floors as required by 6.11.9 or proprietary fasteners may be used in accordance with 7.5.12.2.

7.5.12.2
Proprietary fasteners complying with 7.5.12.3 or 7.5.12.4 may be used to fix *bottom plates* of walls to slab-on-ground floors, other than *wall bracing elements,* provided they are within 150 mm of each end of the *plate* and at not more than 900 mm centres elsewhere.

7.5.12.3
For *internal walls*, proprietary fasteners securing *bottom plates* to concrete floors shall have a minimum horizontal *capacity* when tested in accordance with 2.4.7 as follows:

(a) In the plane of the wall ..... 4 kN;

(b) Out of the plane of the wall ..... 3 kN.

7.5.12.4
For *external walls*, proprietary fasteners securing *bottom plates* to concrete floors shall have a minimum *capacity* when tested in accordance with 2.4.7 as follows:

(a) Horizontal *loads* in the plane of the wall ..... 5 kN;

(b) Horizontal *loads* out of plane of the wall ..... 4 kN;

(c) Vertical *loads* in axial tension of the fastener ..... 8 kN.

7.6 Nailing schedule for timber floor framing

Table 7.5 lists the size, number and location of nails to be used in floor *framing*. See 2.4.4 for other requirements for nails.

Copyright Standards New Zealand

© The Crown in right of New Zealand, administered by the New Zealand Standards Executive. Access to this standard has been sponsored by the Ministry of Business, Innovation, and Employment under copyright license LN001498. You are not permitted to reproduce or distribute any part of this standard without prior written permission from Standards New Zealand, on behalf of New Zealand Standards Executive, unless your actions are covered by Part 3 of the Copyright Act 1994.

© The Crown in right of New Zealand, administered by the New Zealand Standards Executive. Access to this standard has been sponsored by the Ministry of Business, Innovation, and Employment under copyright license LN001498. You are not permitted to reproduce or distribute any part of this standard without prior written permission from Standards New Zealand, on behalf of New Zealand Standards Executive, unless your actions are covered by Part 3 of the Copyright Act 1994.

Table 7.5 – Nailing schedule for hand driven and power driven nails (see 7.6)

Joint	Hand driven nails		Power driven nails	
	Length (mm) x diameter (mm) and type	Number and location	Length (mm) x diameter (mm) and type	Number and location
Floor framing				
Boundary joist to end of each joist	100 x 3.75	2 (end nailed)	90 x 3.15	2 (end nailed)
Curtailed joist not exceeding 3 m long to trimmer	100 x 3.75	3 (end nailed)	90 x 3.15	5 (end nailed)
Curtailed joist to trimmer when half housed	100 x 3.75	2 (end nailed)	90 x 3.15	3 (end nailed)
Flitched joint in joist	100 x 3.75	4 (each end)	90 x 3.15	6 (each end)
Herringbone strutting to joist	60 x 2.8	2 (skewed)	60 x 2.8	2 (skewed)
Joist to plate on foundation walls	100 x 3.75	12 (skewed) per 1.5 m length	90 x 3.15	18 (skewed) per 1.5 m length
Joist to plate or bearer	100 x 3.75	2 (skewed)	90 x 3.15	3 (skewed)
Lapped joint in joist	100 x 3.75	2 (each side)	90 x 3.15	3 (each side)
Solid blocking between joists to plate bearer or stringer	100 x 3.75	4 (skewed)	90 x 3.15	6 (skewed)
Solid blocking to joist	100 x 3.75 or 75 x 3.15	2 (end nailed) 4 (skewed)	90 x 3.15	2 (end nailed)
Flooring				
Sheet decking (not exceeding 21 mm thick):				
(a) Supports at sheet edges	60 x 3.06 ring shanked galv. or 60 x 2.8	150 mm centres	60 x 2.8 ring shanked galv.	150 mm centres
(b) Intermediate supports		300 mm centres		300 mm centres
Strip flooring not exceeding 75 mm wide to floor joist	2½ x finished thickness	1	–	1
Strip flooring not exceeding 100 mm wide to floor joist	2½ x finished thickness	2	–	2

Amd 1 Dec '00

NOTE –
(1) Nail lengths and diameters are the minimum required.
(2) Refer to 4.4 for required protective coatings for metal fasteners.

Copyright Standards New Zealand

© The Crown in right of New Zealand, administered by the New Zealand Standards Executive. Access to this standard has been sponsored by the Ministry of Business, Innovation, and Employment under copyright license LN001498. You are not permitted to reproduce or distribute any part of this standard without prior written permission from Standards New Zealand, on behalf of New Zealand Standards Executive, unless your actions are covered by Part 3 of the Copyright Act 1994.

SECTION 8
WALLS

8.1 General 8-3
8.2 Systems to resist vertical loads 8-3
8.3 Systems to resist horizontal loads 8-3
8.4 Wall framing – General requirements 8-6
8.5 Studs 8-6
8.6 Lintels and sill and head trimmers 8-18
8.7 Plates 8-27
8.8 Dwangs and walings 8-37

Table

8.1 Ratings of 2.4 m high reinforced concrete or reinforced concrete masonry wall bracing elements 8-4
8.2 Studs in loadbearing walls 8-7
8.3 No. 2 Framing in internal non-loadbearing walls ..... 8-10C | Amd 2 May '06
8.4 Studs in non-loadbearing walls 8-11
8.5 Trimming studs 8-16
8.6 Stud spacing adjustment factor for tall studs of smaller cross section in raking walls 8-18
8.7 Span multipliers for roofs steeper than 45° 8-18
8.8 Reference table for lintel load cases 8-19
8.9 Lintels supporting roof only ..... 8-19A | Amd 2 May '06
8.10 Lintels supporting roof and wall 8-20
8.11 Lintels supporting roof, wall and floor 8-21
8.12 Lintels supporting wall and floor 8-22
8.13 Lintels supporting floor only 8-23
8.14 Lintel fixing 8-26
8.15 Sill and head trimmers 8-27
8.16 Top plates of loadbearing walls 8-28
8.17 Bottom plates of loadbearing walls 8-31
8.18 Fixing of top plate to supporting members such as studs and lintels at 600 mm centres 8-37
8.19 Nailing schedule for hand driven and power driven nails 8-39

Copyright Standards New Zealand

© The Crown in right of New Zealand, administered by the New Zealand Standards Executive. Access to this standard has been sponsored by the Ministry of Business, Innovation, and Employment under copyright license LN001498. You are not permitted to reproduce or distribute any part of this standard without prior written permission from Standards New Zealand, on behalf of New Zealand Standards Executive, unless your actions are covered by Part 3 of the Copyright Act 1994.

Figure

8.1 Dragon ties **8**-5

8.2 Framing gable end walls to resist wind loads **8**-12

Amd 2 May '06 | **8.3 Location of wall framing for the purposes of tables 8.2** **8**-12

8.4 Checking and boring studs **8**-14

8.5 Trimming studs and lintels **8**-15

8.6 Straightening studs **8**-17

Amd 2 May '06 | **8.7 Lintel supporting roof only** **8**-19A

8.8 Lintel supporting roof and wall **8**-20

8.9 Lintel supporting roof, floor joists and walls **8**-21

8.10 Lintel supporting wall and floor (truss parallel to lintel) **8**-22

8.11 Lintel supporting floor only **8**-23

8.12 Fixing of lintels to prevent uplift **8**-25

8.13 Strengthening top plate **8**-30

8.14 Connecting top plates – Walls not containing bracing **8**-32

8.15 Connecting top plates in line – Walls containing bracing **8**-32

8.16 Connecting top plates to external walls at right angles – Walls containing bracing **8**-33

8.17 Connecting members providing lateral support to top plates **8**-35

8.18 Strengthening top plate for low density ceilings (against horizontal forces) **8**-35

8.19 Checking and boring top plates **8**-36

8.20 Cut top plate **8**-36

8.21 Ribbon boards **8**-38

Copyright Standards New Zealand

© The Crown in right of New Zealand, administered by the New Zealand Standards Executive. Access to this standard has been sponsored by the Ministry of Business, Innovation, and Employment under copyright license LN001498. You are not permitted to reproduce or distribute any part of this standard without prior written permission from Standards New Zealand, on behalf of New Zealand Standards Executive, unless your actions are covered by Part 3 of the Copyright Act 1994.

8 WALLS

8.1 General

8.1.1

The wall system of each *storey* shall consist of:

(a) A system to resist vertical *loads* and complying with 8.2; combined with

(b) A system to resist horizontal loads and complying with 8.3; and

(c) Any other walls (such walls will be non-loadbearing).

8.1.2

Walls designed to this section will support floors that carry 1.5 kPa and 2 kPa loadings (see section 14 when *floor loads* are 3 kPa).

8.2 Systems to resist vertical loads

The wall system shall be designed to carry vertical *loads* in accordance with 8.4 to 8.8.

8.3 Systems to resist horizontal loads

8.3.1 *General*

8.3.1.1

See section 5 for *bracing* design requirements.

8.3.1.2

Amd 2 May '06

The *bracing capacity* of *wall bracing elements*, other than those given in 8.3.2, shall be determined from the BRANZ P21 Test Procedure and rated in accordance with BRANZ Supplement to P21. The *wall bracing element* shall duplicate the test in all regards including grade, *framing* size and centres, fixing of *linings* and fixing to the floor.

8.3.1.3 *Adjustment of bracing elements for length*

Braced wall elements longer than those tested, shall have their *bracing capacity* determined by multiplying the *bracing rating* by the length of the wall. The end *studs* of the longer wall shall be provided with identical hold down details to those used in the tested wall. Where required as part of the tested wall, a *diagonal brace* must be provided over the full length of the extended wall.

8.3.1.4 *Adjustment of bracing elements for height*

Adjustment of *bracing capacity* of walls of different heights and walls with sloping *top plates* shall be obtained by the following method:

(a) For *wall bracing elements* of heights other than 2.4 m, the *bracing rating* determined by test or from table 8.1 shall be multiplied by

$$\frac{2.4}{\text{element height in metres}}$$

except that elements less than 1.8 m high shall be rated as if they were 1.8 m high.

(b) Walls of varying heights, shall have their *bracing capacity* adjusted in accordance with 8.3.1.4(a), using the average height.

Copyright Standards New Zealand

© The Crown in right of New Zealand, administered by the New Zealand Standards Executive. Access to this standard has been sponsored by the Ministry of Business, Innovation, and Employment, under copyright license LN001498. You are not permitted to reproduce or distribute any part of this standard without prior written permission from Standards New Zealand, on behalf of New Zealand Standards Executive, unless your actions are covered by Part 3 of the Copyright Act 1994.

Amd 1 Dec '00

Table 8.1 – Ratings of 2.4 m high reinforced concrete or reinforced concrete masonry wall bracing elements (see 8.3.2.1)

If ratio $\frac{\text{wall length}}{\text{average wall height}}$ is:	Rating in bracing units per metre of wall (BUs/m)
▶ Less than 0.625	0
▶ More than 0.625 but less than 1.5	42
▶ More than 1.5 but less than 3.0	100
▶ More than 3.0 but less than 4.5	200
▶ More than 4.5	300

NOTE –
(1) Bracing units for walls relate to the ratio of wall length to the average wall height.
(2) Walls to be greater than 1.5 m in length.

8.3.2 *Reinforced concrete and reinforced concrete masonry*

C8.3.2.1
The bracing ratings recognize that the strength contribution of a masonry or concrete wall is limited by the strength of its connections to other structural elements, such as floor or ceiling diaphragms.

Wall bracing elements of reinforced concrete, or reinforced concrete masonry, which are uniformly distributed throughout a building, may be used to contribute to the horizontal bracing of a building, to the ratings permitted in table 8.1.

8.3.2.1
Wall bracing elements of reinforced concrete or reinforced concrete masonry shall have the ratings given in table 8.1.

8.3.2.2
Concrete masonry *bracing elements* shall have a length not less than 1.5 m.

8.3.2.3
The construction of reinforced concrete masonry walls shall comply with NZS 4229.

8.3.2.4
Fixing of timber *framing* to concrete or concrete masonry walls shall be as required for *foundation* walls.

8.3.2.5
The *bracing* provisions permitted for isolated concrete masonry brace elements in this section shall not be used as an alternative to those required in NZS 4229, for reinforced concrete masonry buildings.

8.3.3 Dragon ties

C8.3.3
Dragon ties help stop walls from spreading.

8.3.3.1 ***General***
Dragon ties may be used with a braced wall system to permit the construction of spaces up to 7.5 m x 7.5 m, without the need for a ceiling *diaphragm* (see figure 8.1).

8.3.3.2
When diagonal *dragon ties* are used, the distance to the nearest *bracing line* shall be a maximum of 5.0 m from the junction of the *dragon tie* with the *top plate*, in accordance with the following:

(a) The distance from the external corner to the first *bracing line* shall not exceed 7.5 m;

(b) Every *external wall* with a *dragon tie* attached to the *top plate* shall have a *bracing capacity* of at least 100 *bracing units*.

Copyright Standards New Zealand

© The Crown in right of New Zealand, administered by the New Zealand Standards Executive. Access to this standard has been sponsored by the Ministry of Business, Innovation, and Employment under copyright license LN001498. You are not permitted to reproduce or distribute any part of this standard without prior written permission from Standards New Zealand, on behalf of New Zealand Standards Executive, unless your actions are covered by Part 3 of the Copyright Act 1994.

8.3.3.3

Dragon ties shall only be located at external corners and shall be used in pairs, one at each end of the wall.

Each *dragon tie* shall:

Amd 2 May '06

(a) Consist of a continuous length of 90 mm x 35 mm timber;

(b) Be connected to the *top plates* of the *external wall* and the adjoining *external wall* at right angles, and to intermediate roof and ceiling members;

(c) Be fixed at an angle between 40° and 50° to both *external walls*, not more than 2.5 m from the corner.

8.3.3.4

Dragon ties shall be fixed as follows:

Amd 2 May '06

(a) Either directly to the *top plates* or, to *blocking* pieces which are no deeper than 90 mm and are at least 70 mm wide; and

Amd 1 Dec '00

(b) At the *external wall* being considered, the *dragon ties* shall also be fixed within 100 mm of the *top plate* to a joist, truss or rafter; and

(c) At the adjoining walls which are at right angles, the *blocking* piece shall span between, and be fixed to, adjacent joists, trusses or rafters (see figure 8.1).

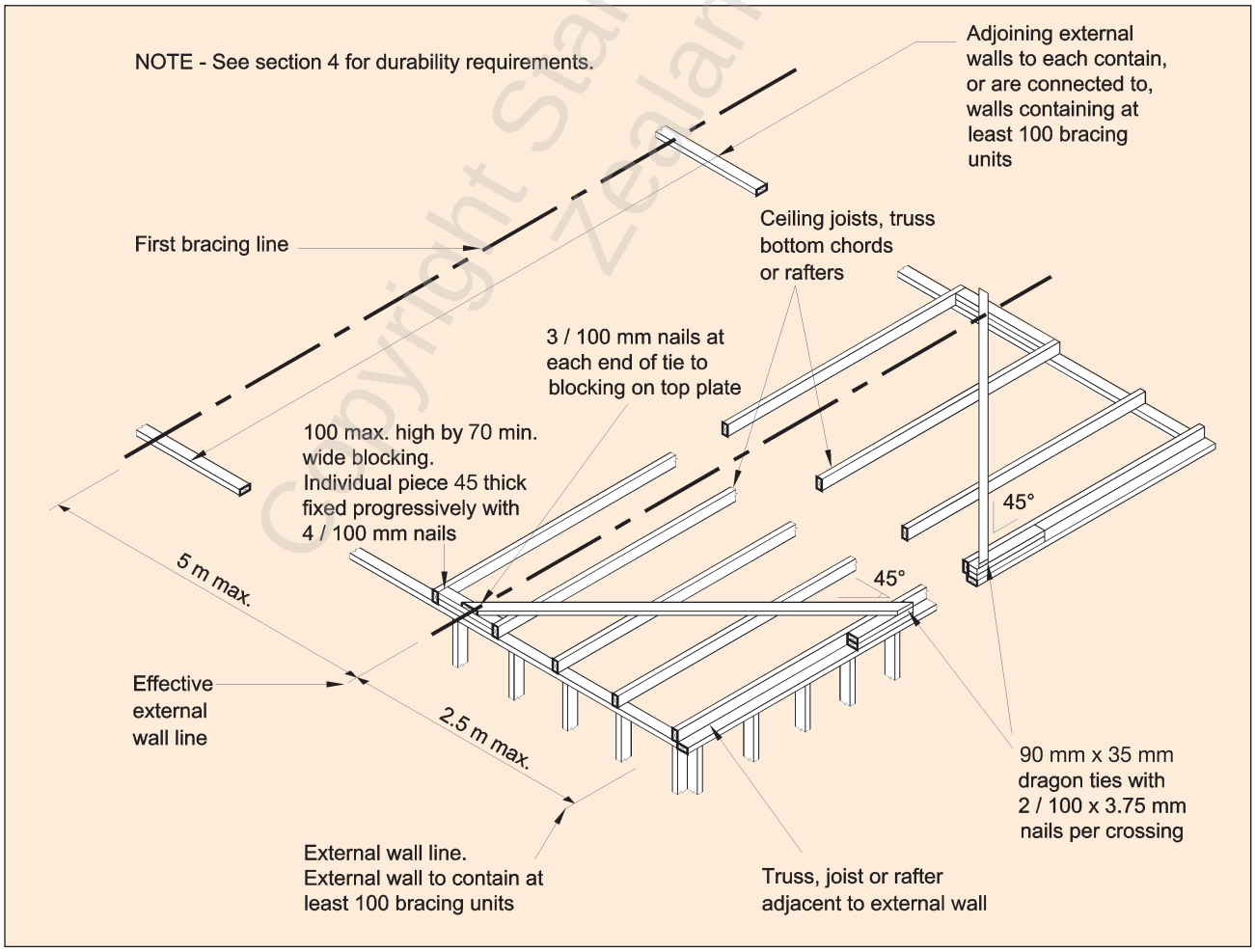

Amd 2 May '06

Figure 8.1 – Dragon ties (see 8.3.3.1)

Copyright Standards New Zealand

© The Crown in right of New Zealand, administered by the New Zealand Standards Executive. Access to this standard has been sponsored by the Ministry of Business, Innovation, and Employment under copyright license LN001498. You are not permitted to reproduce or distribute any part of this standard without prior written permission from Standards New Zealand, on behalf of New Zealand Standards Executive, unless your actions are covered by Part 3 of the Copyright Act 1994.

8.4 Wall framing – General requirements

8.4.1
Wall *framing* timbers shall be set plumb and square, except as permitted by 8.4.2.

8.4.2
Wall frames may be inclined not more than 20° from the vertical, for the purpose of forming *mansard roof*s only.

C8.4.3
The span determined in accordance with figure 1.3 in section 1 relates to the roof mass carried by the walls. It does not correspond to the span and must not be used for determining the sizes of roof members.

8.4.3
The *loaded dimension* shall be determined in accordance with 1.3, for the purpose of determining the dimensions of wall *framing* members.

8.5 Studs

8.5.1 *General*

C8.5.1.1
Figure 8.3 shows the location of walls as referred to in table 8.2. This Standard does not provide for wall framing supporting vertical loads from heavy wall cladding.

8.5.1.1
Studs shall be as follows.

(a) *Loadbearing walls*: As given by tables 8.2 and 14.10.

(b) *Non-loadbearing walls*: As given by tables 8.3 and 8.4. Table 8.3 applies only to internal *non-loadbearing walls* and provides for the use of No.2 *framing*. Gable end walls within 1.2 metres of adjoining rafter or truss shall be regarded as *non-loadbearing walls* and designed in accordance with table 8.4.

8.5.1.2
Wall *framing studs* and *trimming studs* may be built-up by nailing 2 or more pieces together to the required size as follows:

	Stud thickness in table	Built-up thickness
Trimming studs	70 mm	2/35 mm
	90 mm	2/45 mm
	105 mm	3/35 mm
	115 mm	2/45 mm + 1/35 mm or 2/35 mm + 1/45 mm
	135 mm	3/45 mm
	140 mm	2/70 mm or 4/35 mm
	180 mm	4/45 mm
	210 mm	4/45 mm + 1/35 mm or 6/35 mm
	270 mm	6/45 mm

NOTE – Built-up members comprising other combinations of framing members are allowed provided that overall thickness of the original member is matched or exceeded.

Amd 2 May '06

Copyright Standards New Zealand

Table 8.2 – Studs in loadbearing walls (see 8.5.1.1) – No. 1 Framing and MSG 6

1.5 kPa and 2 kPa floor loads

A Single or top storey – Light roof

Wind Zone	Loaded dimen-sion* of wall	Stud sizes for maximum length (height) of: (m)								
		2.4			2.7			3		
		At maximum stud spacing (mm) of:			At maximum stud spacing (mm) of:			At maximum stud spacing (mm) of:		
		400	480	600	400	480	600	400	480	600
	(m)	(mm x mm)	(mm x mm)	(mm x mm)	(mm x mm)	(mm x mm)	(mm x mm)	(mm x mm)	(mm x mm)	(mm x mm)
		(Width x thickness)								
Very high	3.0	90 x 70	90 x 70	90 x 70	90 x 70	90 x 90	90 x 90	90 x 90	140 x 45	140 x 45
	4.5	90 x 70	90 x 70	90 x 90	90 x 70	90 x 90	90 x 90	90 x 90	140 x 45	140 x 45
	6.0	90 x 70	90 x 70	90 x 90	90 x 70	90 x 90	90 x 90	90 x 90	140 x 45	140 x 70
High	3.0	90 x 45	90 x 45	90 x 70	90 x 70	90 x 70	90 x 70	90 x 70	90 x 90	140 x 45
	4.5	90 x 45	90 x 45	90 x 70	90 x 70	90 x 70	90 x 70	90 x 70	90 x 90	140 x 45
	6.0	90 x 45	90 x 45	90 x 70	90 x 70	90 x 70	90 x 90	90 x 70	90 x 90	140 x 45
Medium	3.0	70 x 45	90 x 35	90 x 45	90 x 35	90 x 45	90 x 70	90 x 45	90 x 70	90 x 70
	4.5	90 x 35	90 x 35	90 x 45	90 x 35	90 x 45	90 x 70	90 x 45	90 x 70	90 x 70
	6.0	90 x 35	90 x 35	90 x 45	90 x 35	90 x 45	90 x 70	90 x 45	90 x 70	90 x 70
Low	3.0	70 x 35	70 x 45	90 x 35	70 x 45	90 x 35	90 x 45	90 x 35	90 x 45	90 x 70
	4.5	70 x 45	70 x 45	90 x 35	70 x 45	90 x 35	90 x 45	90 x 35	90 x 45	90 x 70
	6.0	70 x 45	70 x 45	90 x 35	90 x 35	90 x 35	90 x 45	90 x 35	90 x 45	90 x 70
Internal walls	3.0	70 x 35	70 x 45	90 x 35	70 x 45	90 x 35	90 x 45	90 x 35	90 x 45	90 x 70
	4.5	70 x 45	70 x 45	90 x 35	70 x 45	90 x 35	90 x 45	90 x 35	90 x 45	90 x 70
	6.0	70 x 45	70 x 45	90 x 35	90 x 35	90 x 35	90 x 45	90 x 35	90 x 45	90 x 70
		3.6			4.2			4.8		
		At maximum stud spacing (mm) of:			At maximum stud spacing (mm) of:			At maximum stud spacing (mm) of:		
		400	480	600	400	480	600	400	480	600
	(m)	(mm x mm)	(mm x mm)	(mm x mm)	(mm x mm)	(mm x mm)	(mm x mm)	(mm x mm)	(mm x mm)	(mm x mm)
		(Width x thickness)								
Very high	3.0	140 x 45	140 x 70	140 x 70	190 x 45	190 x 45	190 x 70	190 x 70	190 x 70	–
	4.5	140 x 45	140 x 70	140 x 70	190 x 45	190 x 45	190 x 70	190 x 70	190 x 70	–
	6.0	140 x 45	140 x 70	140 x 70	190 x 45	190 x 45	190 x 70	190 x 70	190 x 70	–
High	3.0	140 x 45	140 x 45	140 x 70	140 x 70	190 x 45	190 x 45	190 x 45	190 x 70	190 x 70
	4.5	140 x 45	140 x 45	140 x 70	140 x 70	190 x 45	190 x 45	190 x 45	190 x 70	190 x 70
	6.0	140 x 45	140 x 45	140 x 70	140 x 70	190 x 45	190 x 45	190 x 45	190 x 70	190 x 70
Medium	3.0	90 x 90	140 x 45	140 x 45	140 x 45	140 x 70	140 x 70	140 x 70	190 x 45	190 x 45
	4.5	90 x 90	140 x 45	140 x 45	140 x 45	140 x 70	140 x 70	140 x 70	190 x 45	190 x 45
	6.0	90 x 90	140 x 45	140 x 45	140 x 45	140 x 70	140 x 70	140 x 70	190 x 45	190 x 45
Low	3.0	90 x 70	90 x 90	140 x 45	140 x 45	140 x 45	140 x 70	140 x 70	140 x 70	190 x 45
	4.5	90 x 70	90 x 90	140 x 45	140 x 45	140 x 45	140 x 70	140 x 70	140 x 70	190 x 45
	6.0	90 x 70	90 x 90	140 x 45	140 x 45	140 x 45	140 x 70	140 x 70	140 x 70	190 x 45
Internal walls	3.0	90 x 70	90 x 90	140 x 45	140 x 45	140 x 45	140 x 70	140 x 70	140 x 70	190 x 45
	4.5	90 x 70	90 x 90	140 x 45	140 x 45	140 x 45	140 x 70	140 x 70	140 x 70	190 x 45
	6.0	90 x 70	90 x 90	140 x 45	140 x 45	140 x 45	140 x 70	140 x 70	140 x 70	190 x 45

* For definition of loaded dimension see 1.3.

NOTE –

(1) Studs 70 mm and 90 mm thick may be replaced with studs of 35 mm and 45 mm thickness respectively, provided they are placed at no more than one half the spacing required for the 70 mm and 90 mm stud they are replacing.

(2) 140 x 45 may be substituted for 90 x 90. 90 x 35 may be substituted for 70 x 45.

(3) Studs 70 mm and 90 mm thick may be substituted with built-up members sized in accordance with 8.5.1.2 and nailed together in accordance with 2.4.4.7.

Amd 2
May '06

© The Crown in right of New Zealand, administered by the New Zealand Standards Executive. Access to this standard has been sponsored by the Ministry of Business, Innovation, and Employment under copyright license LN001498. You are not permitted to reproduce or distribute any part of this standard without prior written permission from Standards New Zealand, on behalf of New Zealand Standards Executive, unless your actions are covered by Part 3 of the Copyright Act 1994.

Copyright Standards New Zealand

Table 8.2 – Studs in loadbearing walls (continued) (see 8.5.1.1) – No. 1 Framing and MSG 6

1.5 kPa and 2 kPa floor loads

B Single or top storey – Heavy roof

Wind zone	Loaded dimension* of wall	Stud sizes for maximum length (height) of: (m)								
		2.4			2.7			3		
		At maximum stud spacing (mm) of:			At maximum stud spacing (mm) of:			At maximum stud spacing (mm) of:		
		400	480	600	400	480	600	400	480	600
	(m)	(mm x mm)	(mm x mm)	(mm x mm)	(mm x mm)	(mm x mm)	(mm x mm)	(mm x mm)	(mm x mm)	(mm x mm)
		(Width x thickness)								
Very high	3.0	90 x 70	90 x 70	90 x 90	90 x 70	90 x 90	140 x 45	90 x 90	140 x 45	140 x 70
	4.5	90 x 70	90 x 70	90 x 90	90 x 70	90 x 90	140 x 45	90 x 90	140 x 45	140 x 70
	6.0	90 x 70	90 x 70	90 x 90	90 x 70	90 x 90	140 x 45	90 x 90	140 x 45	140 x 70
High	3.0	90 x 45	90 x 70	90 x 70	90 x 70	90 x 70	90 x 90	90 x 70	90 x 90	140 x 45
	4.5	90 x 45	90 x 70	90 x 70	90 x 70	90 x 70	90 x 90	90 x 70	90 x 90	140 x 45
	6.0	90 x 45	90 x 70	90 x 70	90 x 70	90 x 70	90 x 90	90 x 70	90 x 90	140 x 45
Medium	3.0	90 x 35	90 x 35	90 x 45	90 x 35	90 x 45	90 x 70	90 x 45	90 x 70	90 x 70
	4.5	90 x 35	90 x 35	90 x 45	90 x 45	90 x 45	90 x 70	90 x 45	90 x 70	90 x 70
	6.0	90 x 35	90 x 45	90 x 45	90 x 45	90 x 70	90 x 70	90 x 70	90 x 70	90 x 70
Low	3.0	70 x 45	70 x 45	90 x 35	90 x 35	90 x 35	90 x 45	90 x 35	90 x 45	90 x 70
	4.5	70 x 45	90 x 35	90 x 35	90 x 35	90 x 35	90 x 45	90 x 45	90 x 45	90 x 70
	6.0	70 x 45	90 x 35	90 x 45	90 x 35	90 x 45	90 x 70	90 x 45	90 x 45	90 x 70
Internal walls	3.0	70 x 45	70 x 45	90 x 35	90 x 35	90 x 35	90 x 45	90 x 35	90 x 45	90 x 70
	4.5	70 x 45	90 x 35	90 x 35	90 x 35	90 x 35	90 x 45	90 x 45	90 x 45	90 x 70
	6.0	70 x 45	90 x 35	90 x 45	90 x 35	90 x 45	90 x 45	90 x 45	90 x 45	90 x 70
		3.6			4.2			4.8		
		At maximum stud spacing (mm) of:			At maximum stud spacing (mm) of:			At maximum stud spacing (mm) of:		
		400	480	600	400	480	600	400	480	600
	(m)	(mm x mm)	(mm x mm)	(mm x mm)	(mm x mm)	(mm x mm)	(mm x mm)	(mm x mm)	(mm x mm)	(mm x mm)
		(Width x thickness)								
Very High	3.0	140 x 45	140 x 70	140 x 70	190 x 45	190 x 45	190 x 70	190 x 70	190 x 70	–
	4.5	140 x 45	140 x 70	140 x 70	190 x 45	190 x 45	190 x 70	190 x 70	190 x 70	–
	6.0	140 x 45	140 x 70	140 x 70	190 x 45	190 x 45	190 x 70	190 x 70	190 x 70	–
High	3.0	140 x 45	140 x 45	140 x 70	140 x 70	190 x 45	190 x 45	190 x 45	190 x 70	190 x 70
	4.5	140 x 45	140 x 45	140 x 70	140 x 70	190 x 45	190 x 45	190 x 45	190 x 70	190 x 70
	6.0	140 x 45	140 x 45	140 x 70	140 x 70	190 x 45	190 x 45	190 x 45	190 x 70	190 x 70
Medium	3.0	90 x 90	140 x 45	140 x 45	140 x 45	140 x 70	140 x 70	140 x 70	190 x 45	190 x 45
	4.5	90 x 90	140 x 45	140 x 45	140 x 45	140 x 70	140 x 70	140 x 70	190 x 45	190 x 45
	6.0	90 x 90	140 x 45	140 x 45	140 x 45	140 x 70	140 x 70	140 x 70	190 x 45	190 x 45
Low	3.0	90 x 70	90 x 90	140 x 45	140 x 45	140 x 45	140 x 70	140 x 70	140 x 70	190 x 45
	4.5	90 x 70	90 x 90	140 x 45	140 x 45	140 x 45	140 x 70	140 x 70	140 x 70	190 x 45
	6.0	90 x 70	90 x 90	140 x 45	140 x 45	140 x 45	140 x 70	140 x 70	140 x 70	190 x 45
Internal walls	3.0	90 x 70	90 x 90	140 x 45	140 x 45	140 x 45	140 x 70	140 x 70	140 x 70	190 x 45
	4.5	90 x 70	90 x 90	140 x 45	140 x 45	140 x 45	140 x 70	140 x 70	140 x 70	190 x 45
	6.0	90 x 70	90 x 90	140 x 45	140 x 45	140 x 45	140 x 70	140 x 70	140 x 70	190 x 45

* For definition of loaded dimension see 1.3.

NOTE –

(1) Studs 70 mm and 90 mm thick may be replaced with studs of 35 mm and 45 mm thickness respectively, provided they are placed at no more than one half the spacing required for the 70 mm and 90 mm stud they are replacing.

(2) 140 x 45 may be substituted for 90 x 90. 90 x 35 may be substituted for 70 x 45.

(3) Studs 70 mm and 90 mm thick may be substituted with built-up members sized in accordance with 8.5.1.2 and nailed together in accordance with 2.4.4.7.

Amd 2
May '06

© The Crown in right of New Zealand, administered by the New Zealand Standards Executive. Access to this standard has been sponsored by the Ministry of Business, Innovation, and Employment under copyright license LN001498. You are not permitted to reproduce or distribute any part of this standard without prior written permission from Standards New Zealand, on behalf of New Zealand Standards Executive, unless your actions are covered by Part 3 of the Copyright Act 1994.

Copyright Standards New Zealand

© The Crown in right of New Zealand, administered by the New Zealand Standards Executive. Access to this standard has been sponsored by the Ministry of Business, Innovation, and Employment under copyright license LN001498. You are not permitted to reproduce or distribute any part of this standard without prior written permission from Standards New Zealand, on behalf of New Zealand Standards Executive, unless your actions are covered by Part 3 of the Copyright Act 1994.

Table 8.2 – Studs in loadbearing walls (continued) (see 8.5.1.1) – **No. 1 Framing and MSG 6**

1.5 kPa and 2 kPa floor loads

C Lower of two storeys or subfloor beneath one storey

Wind zone	Loaded dimen-sion* of wall	Stud sizes for maximum length (height) of: (m)								
		2.4			2.7			3		
		At maximum stud spacing (mm) of:			At maximum stud spacing (mm) of:			At maximum stud spacing (mm) of:		
		400	480	600	400	480	600	400	480	600
	(m)	(mm x mm)	(mm x mm)	(mm x mm)	(mm x mm)	(mm x mm)	(mm x mm)	(mm x mm)	(mm x mm)	(mm x mm)
		(Width x thickness)								
Very high	3.0	90 x 70	90 x 70	90 x 90	90 x 70	90 x 90	140 x 45	90 x 90	140 x 45	140 x 70
	4.5	90 x 70	90 x 70	90 x 90	90 x 70	90 x 90	140 x 45	90 x 90	140 x 45	140 x 70
	6.0	90 x 70	90 x 70	90 x 90	90 x 70	90 x 90	140 x 45	90 x 90	140 x 45	140 x 70
High	3.0	90 x 45	90 x 70	90 x 70	90 x 70	90 x 70	90 x 90	90 x 70	90 x 90	140 x 45
	4.5	90 x 45	90 x 70	90 x 70	90 x 70	90 x 70	90 x 90	90 x 70	90 x 90	140 x 45
	6.0	90 x 45	90 x 70	90 x 70	90 x 70	90 x 70	90 x 90	90 x 70	90 x 90	140 x 45
Medium	3.0	90 x 35	90 x 45	90 x 70	90 x 45	90 x 70	90 x 70	90 x 70	90 x 70	90 x 90
	4.5	90 x 35	90 x 45	90 x 70	90 x 45	90 x 70	90 x 70	90 x 70	90 x 70	90 x 90
	6.0	90 x 35	90 x 45	90 x 70	90 x 45	90 x 70	90 x 70	90 x 70	90 x 70	90 x 90
Low	3.0	70 x 45	90 x 35	90 x 45	90 x 35	90 x 45	90 x 70	90 x 45	90 x 70	90 x 70
	4.5	90 x 35	90 x 35	90 x 45	90 x 35	90 x 45	90 x 70	90 x 45	90 x 70	90 x 70
	6.0	90 x 35	90 x 35	90 x 45	90 x 35	90 x 45	90 x 70	90 x 45	90 x 70	90 x 70
Internal walls	3.0	70 x 45	90 x 35	90 x 45	90 x 35	90 x 45	90 x 70	90 x 45	90 x 70	90 x 70
	4.5	90 x 35	90 x 35	90 x 45	90 x 35	90 x 45	90 x 70	90 x 45	90 x 70	90 x 70
	6.0	90 x 35	90 x 35	90 x 45	90 x 35	90 x 45	90 x 70	90 x 45	90 x 70	90 x 70

* For definition of loaded dimension see 1.3.

NOTE –

(1) Determine the loaded dimension of the wall at floor level and the loaded dimension of the wall above at roof level and use the greater value in this table.

(2) 140 x 45 may be substituted for 90 x 90.
90 x 35 may be substituted for 70 x 45.

(3) Studs 70 mm and 90 mm thick may be replaced with studs of 35 mm and 45 mm thickness respectively, provided they are placed at no more than one half the spacing required for the 70 mm and 90 mm stud they are replacing.

(4) Studs 70 mm and 90 mm thick may be substituted with built-up members sized in accordance with 8.5.1.2 and nailed together in accordance with 2.4.4.7.

Amd 2
May '06

copyright Standards New Zealand

© The Crown in right of New Zealand, administered by the New Zealand Standards Executive. Access to this standard has been sponsored by the Ministry of Business, Innovation, and Employment under copyright license LN001498. You are not permitted to reproduce or distribute any part of this standard without prior written permission from Standards New Zealand, on behalf of New Zealand Standards Executive, unless your actions are covered by Part 3 of the Copyright Act 1994.

Table 8.2 – Studs in loadbearing walls (continued) (see 8.5.1.1) – **No. 1 Framing and MSG 6**

1.5 kPa and 2 kPa floor loads

D Subfloor beneath two storeys

Wind zone	Loaded dimension* of wall	Stud sizes for maximum length (height) of: (m)								
		2.4			2.7			3		
		At maximum stud spacing (mm) of:			At maximum stud spacing (mm) of:			At maximum stud spacing (mm) of:		
		400	480	600	400	480	600	400	480	600
	(m)	(mm x mm)	(mm x mm)	(mm x mm)	(mm x mm)	(mm x mm)	(mm x mm)	(mm x mm)	(mm x mm)	(mm x mm)
		(Width x thickness)								
Very high	3.0	90 x 70	90 x 70	90 x 90	90 x 70	90 x 90	140 x 45	90 x 90	140 x 45	140 x 70
	4.5	90 x 70	90 x 70	90 x 90	90 x 70	90 x 90	140 x 45	90 x 90	140 x 45	140 x 70
	6.0	90 x 70	90 x 70	90 x 90	90 x 70	90 x 90	140 x 45	90 x 90	140 x 45	140 x 70
High	3.0	90 x 45	90 x 70	90 x 70	90 x 70	90 x 70	90 x 90	90 x 70	90 x 90	140 x 45
	4.5	90 x 70	90 x 70	90 x 70	90 x 70	90 x 70	90 x 90	90 x 90	90 x 90	140 x 45
	6.0	90 x 70	90 x 70	90 x 90	90 x 70	90 x 90	90 x 90	90 x 90	90 x 90	140 x 45
Medium	3.0	90 x 35	90 x 45	90 x 70	90 x 45	90 x 70	90 x 70	90 x 70	90 x 70	90 x 90
	4.5	90 x 45	90 x 45	90 x 70	90 x 70	90 x 70	90 x 70	90 x 70	90 x 70	90 x 90
	6.0	90 x 45	90 x 45	90 x 70	90 x 70	90 x 70	90 x 90	90 x 70	90 x 70	90 x 90
Low	3.0	90 x 35	90 x 35	90 x 45	90 x 45	90 x 45	90 x 70	90 x 45	90 x 70	90 x 70
	4.5	90 x 35	90 x 45	90 x 70	90 x 45	90 x 70	90 x 70	90 x 70	90 x 70	90 x 70
	6.0	90 x 35	90 x 45	90 x 70	90 x 45	90 x 70	90 x 70	90 x 70	90 x 70	90 x 90
Internal walls	3.0	90 x 35	90 x 35	90 x 45	90 x 45	90 x 45	90 x 70	90 x 45	90 x 70	90 x 70
	4.5	90 x 35	90 x 45	90 x 45	90 x 45	90 x 45	90 x 70	90 x 70	90 x 70	90 x 70
	6.0	90 x 35	90 x 45	90 x 70	90 x 45	90 x 70	90 x 70	90 x 70	90 x 70	90 x 90

* For definition of loaded dimension see 1.3.

NOTE –

(1) Determine the loaded dimension of the subfloor wall at floor level and the loaded dimension of the walls above at floor and roof levels and use the greatest value in this table.

(2) 140 x 45 may be substituted for 90 x 90.

(3) Studs 70 mm and 90 mm thick may be replaced with studs of 35 mm and 45 mm thickness respectively, provided they are placed at no more than one half the spacing required for the 70 mm and 90 mm stud they are replacing.

(4) Studs 70 mm and 90 mm thick may be substituted with built-up members sized in accordance with 8.5.1.2 and nailed together in accordance with 2.4.4.7.

Amd 2
May '06

Copyright Standards New Zealand

Table 8.2 – Studs in loadbearing walls (see 8.5.1.1) – VSG 8 and MSG 8

1.5 kPa and 2 kPa floor loads

A Single or top storey – Light roof

Wind Zone	Loaded dimen-sion* of wall	Stud sizes for maximum length (height) of: (m)								
		2.4			2.7			3		
		At maximum stud spacing (mm) of:			At maximum stud spacing (mm) of:			At maximum stud spacing (mm) of:		
		400	480	600	400	480	600	400	480	600
	(m)	(mm x mm)	(mm x mm)	(mm x mm)	(mm x mm)	(mm x mm)	(mm x mm)	(mm x mm)	(mm x mm)	(mm x mm)
		(Width x thickness)								
Very high	3.0	90 x 35	90 x 45	90 x 70	90 x 45	90 x 70	90 x 70	90 x 70	90 x 90	90 x 90
	4.5	90 x 35	90 x 45	90 x 70	90 x 45	90 x 70	90 x 70	90 x 70	90 x 90	90 x 90
	6.0	90 x 35	90 x 45	90 x 70	90 x 45	90 x 70	90 x 70	90 x 70	90 x 90	90 x 90
High	3.0	70 x 45	90 x 35	90 x 45	90 x 35	90 x 45	90 x 70	90 x 70	90 x 70	90 x 70
	4.5	70 x 45	90 x 35	90 x 45	90 x 35	90 x 45	90 x 70	90 x 70	90 x 70	90 x 70
	6.0	90 x 35	90 x 35	90 x 45	90 x 35	90 x 45	90 x 70	90 x 70	90 x 70	90 x 70
Medium	3.0	70 x 35	70 x 45	90 x 35	70 x 45	90 x 35	90 x 45	90 x 35	90 x 45	90 x 45
	4.5	70 x 35	70 x 45	90 x 35	70 x 45	90 x 35	90 x 45	90 x 35	90 x 45	90 x 70
	6.0	70 x 35	70 x 45	90 x 35	70 x 45	70 x 45	90 x 45	90 x 35	90 x 45	90 x 70
Low	3.0	70 x 35	70 x 35	70 x 45	70 x 35	70 x 45	90 x 35	90 x 35	90 x 35	90 x 35
	4.5	70 x 35	70 x 35	70 x 45	70 x 35	70 x 45	90 x 35	90 x 35	90 x 35	90 x 45
	6.0	70 x 35	70 x 35	70 x 45	70 x 35	70 x 45	90 x 35	90 x 35	90 x 35	90 x 45
Internal walls	3.0	70 x 35	70 x 35	70 x 45	70 x 35	70 x 45	90 x 35	90 x 35	90 x 35	90 x 35
	4.5	70 x 35	70 x 35	70 x 45	70 x 35	70 x 45	90 x 35	90 x 35	90 x 35	90 x 45
	6.0	70 x 35	70 x 35	70 x 45	70 x 35	70 x 45	90 x 35	90 x 35	90 x 35	90 x 45
		3.6			4.2			4.8		
		At maximum stud spacing (mm) of:			At maximum stud spacing (mm) of:			At maximum stud spacing (mm) of:		
		400	480	600	400	480	600	400	480	600
	(m)	(mm x mm)	(mm x mm)	(mm x mm)	(mm x mm)	(mm x mm)	(mm x mm)	(mm x mm)	(mm x mm)	(mm x mm)
		(Width x thickness)								
Very high	3.0	140 x 45	140 x 45	140 x 70	140 x 70	190 x 45	190 x 45	190 x 45	190 x 70	190 x 70
	4.5	140 x 45	140 x 45	140 x 70	140 x 70	190 x 45	190 x 45	190 x 45	190 x 70	190 x 70
	6.0	140 x 45	140 x 45	140 x 70	140 x 70	190 x 45	190 x 45	190 x 45	190 x 70	190 x 70
High	3.0	140 x 45	140 x 45	140 x 45	140 x 70	140 x 70	190 x 45	190 x 45	190 x 45	190 x 70
	4.5	140 x 45	140 x 45	140 x 45	140 x 70	140 x 70	190 x 45	190 x 45	190 x 45	190 x 70
	6.0	140 x 45	140 x 45	140 x 45	140 x 70	140 x 70	190 x 45	190 x 45	190 x 45	190 x 70
Medium	3.0	90 x 70	90 x 90	140 x 45	140 x 45	140 x 45	140 x 70	140 x 70	140 x 70	190 x 45
	4.5	90 x 70	90 x 90	140 x 45	140 x 45	140 x 45	140 x 70	140 x 70	140 x 70	190 x 45
	6.0	90 x 70	90 x 90	140 x 45	140 x 45	140 x 45	140 x 70	140 x 70	140 x 70	190 x 45
Low	3.0	90 x 70	90 x 70	90 x 70	90 x 90	140 x 45	140 x 45	140 x 45	140 x 70	140 x 70
	4.5	90 x 70	90 x 70	90 x 70	90 x 90	140 x 45	140 x 45	140 x 45	140 x 70	140 x 70
	6.0	90 x 70	90 x 70	90 x 70	90 x 90	140 x 45	140 x 45	140 x 45	140 x 70	140 x 70
Internal walls	3.0	90 x 70	90 x 70	90 x 70	90 x 90	140 x 45	140 x 45	140 x 45	140 x 70	140 x 70
	4.5	90 x 70	90 x 70	90 x 70	90 x 90	140 x 45	140 x 45	140 x 45	140 x 70	140 x 70
	6.0	90 x 70	90 x 70	90 x 70	90 x 90	140 x 45	140 x 45	140 x 45	140 x 70	140 x 70

* For definition of loaded dimension see 1.3.

NOTE –

(1) Studs 70 mm and 90 mm thick may be replaced with studs of 35 mm and 45 mm thickness respectively, provided they are placed at no more than one half the spacing required for the 70 mm and 90 mm stud they are replacing.

(2) 140 x 45 may be substituted for 90 x 90. 90 x 35 may be substituted for 70 x 45.

(3) Studs 70 mm and 90 mm thick may be substituted with built-up members sized in accordance with 8.5.1.2 and nailed together in accordance with 2.4.4.7.

Amd 2
May '06

© The Crown in right of New Zealand, administered by the New Zealand Standards Executive. Access to this standard has been sponsored by the Ministry of Business, Innovation, and Employment under copyright license LN001498. You are not permitted to reproduce or distribute any part of this standard without prior written permission from Standards New Zealand, on behalf of New Zealand Standards Executive, unless your actions are covered by Part 3 of the Copyright Act 1994.

Copyright Standards New Zealand

Table 8.2 – Studs in loadbearing walls (continued) (see 8.5.1.1) – VSG 8 and MSG 8

1.5 kPa and 2 kPa floor loads

B Single or top storey – Heavy roof

Wind zone	Loaded dimension* of wall	Stud sizes for maximum length (height) of: (m)								
		2.4			2.7			3		
		At maximum stud spacing (mm) of:			At maximum stud spacing (mm) of:			At maximum stud spacing (mm) of:		
		400	480	600	400	480	600	400	480	600
	(m)	(mm x mm)	(mm x mm)	(mm x mm)	(mm x mm)	(mm x mm)	(mm x mm)	(mm x mm)	(mm x mm)	(mm x mm)
		(Width x thickness)								
Very high	3.0	90 x 35	90 x 45	90 x 70	90 x 45	90 x 70	90 x 70	90 x 70	90 x 90	90 x 90
	4.5	90 x 45	90 x 45	90 x 70	90 x 45	90 x 70	90 x 70	90 x 70	90 x 90	90 x 90
	6.0	90 x 45	90 x 45	90 x 70	90 x 70	90 x 70	90 x 70	90 x 70	90 x 90	90 x 90
High	3.0	90 x 35	90 x 35	90 x 45	90 x 35	90 x 45	90 x 70	90 x 70	90 x 70	90 x 70
	4.5	90 x 35	90 x 35	90 x 45	90 x 45	90 x 45	90 x 70	90 x 70	90 x 70	90 x 70
	6.0	90 x 35	90 x 45	90 x 45	90 x 45	90 x 45	90 x 70	90 x 70	90 x 70	90 x 70
Medium	3.0	70 x 35	70 x 45	90 x 35	70 x 45	90 x 35	90 x 45	90 x 35	90 x 45	90 x 70
	4.5	70 x 45	70 x 45	90 x 35	90 x 35	90 x 35	90 x 45	90 x 35	90 x 45	90 x 70
	6.0	70 x 45	90 x 35	90 x 35	90 x 35	90 x 35	90 x 45	90 x 35	90 x 45	90 x 70
Low	3.0	70 x 35	70 x 35	70 x 45	70 x 35	70 x 45	90 x 35	90 x 35	90 x 35	90 x 45
	4.5	70 x 35	70 x 35	70 x 45	70 x 45	70 x 45	90 x 35	90 x 35	90 x 35	90 x 45
	6.0	70 x 35	70 x 45	90 x 35	70 x 45	90 x 35	90 x 35	90 x 35	90 x 35	90 x 45
Internal walls	3.0	70 x 35	70 x 35	70 x 45	70 x 35	70 x 45	90 x 35	90 x 35	90 x 35	90 x 45
	4.5	70 x 35	70 x 35	70 x 45	70 x 45	70 x 45	90 x 35	90 x 35	90 x 35	90 x 45
	6.0	70 x 35	70 x 45	90 x 35	70 x 45	90 x 35	90 x 35	90 x 35	90 x 35	90 x 45
		3.6			4.2			4.8		
		At maximum stud spacing (mm) of:			At maximum stud spacing (mm) of:			At maximum stud spacing (mm) of:		
		400	480	600	400	480	600	400	480	600
	(m)	(mm x mm)	(mm x mm)	(mm x mm)	(mm x mm)	(mm x mm)	(mm x mm)	(mm x mm)	(mm x mm)	(mm x mm)
		(Width x thickness)								
Very High	3.0	140 x 45	140 x 45	140 x 70	140 x 70	190 x 45	190 x 45	190 x 45	190 x 70	190 x 70
	4.5	140 x 45	140 x 45	140 x 70	140 x 70	190 x 45	190 x 45	190 x 45	190 x 70	190 x 70
	6.0	140 x 45	140 x 45	140 x 70	140 x 70	190 x 45	190 x 45	190 x 45	190 x 70	190 x 70
High	3.0	140 x 45	140 x 45	140 x 45	140 x 70	140 x 70	190 x 45	190 x 45	190 x 45	190 x 70
	4.5	140 x 45	140 x 45	140 x 45	140 x 70	140 x 70	190 x 45	190 x 45	190 x 45	190 x 70
	6.0	140 x 45	140 x 45	140 x 45	140 x 70	140 x 70	190 x 45	190 x 45	190 x 45	190 x 70
Medium	3.0	90 x 70	90 x 90	140 x 45	140 x 45	140 x 45	140 x 70	140 x 70	140 x 70	190 x 45
	4.5	90 x 70	90 x 90	140 x 45	140 x 45	140 x 45	140 x 70	140 x 70	140 x 70	190 x 45
	6.0	90 x 70	90 x 90	140 x 45	140 x 45	140 x 45	140 x 70	140 x 70	140 x 70	190 x 45
Low	3.0	90 x 70	90 x 70	90 x 70	90 x 90	140 x 45	140 x 45	140 x 45	140 x 70	140 x 70
	4.5	90 x 70	90 x 70	90 x 70	90 x 90	140 x 45	140 x 45	140 x 45	140 x 70	140 x 70
	6.0	90 x 70	90 x 70	90 x 70	90 x 90	140 x 45	140 x 45	140 x 45	140 x 70	140 x 70
Internal walls	3.0	90 x 70	90 x 70	90 x 70	90 x 90	140 x 45	140 x 45	140 x 45	140 x 70	140 x 70
	4.5	90 x 70	90 x 70	90 x 70	90 x 90	140 x 45	140 x 45	140 x 45	140 x 70	140 x 70
	6.0	90 x 70	90 x 70	90 x 70	90 x 90	140 x 45	140 x 45	140 x 45	140 x 70	140 x 70

* For definition of loaded dimension see 1.3.

NOTE –

(1) Studs 70 mm and 90 mm thick may be replaced with studs of 35 mm and 45 mm thickness respectively, provided they are placed at no more than one half the spacing required for the 70 mm and 90 mm stud they are replacing.

(2) 140 x 45 may be substituted for 90 x 90. 90 x 35 may be substituted for 70 x 45.

(3) Studs 70 mm and 90 mm thick may be substituted with built-up members sized in accordance with 8.5.1.2 and nailed together in accordance with 2.4.4.7.

Amd 2 May '06

© The Crown in right of New Zealand, administered by the New Zealand Standards Executive. Access to this standard has been sponsored by the Ministry of Business, Innovation, and Employment under copyright license LN001498. You are not permitted to reproduce or distribute any part of this standard without prior written permission from Standards New Zealand, on behalf of New Zealand Standards Executive, unless your actions are covered by Part 3 of the Copyright Act 1994.

Copyright Standards New Zealand

Table 8.2 – Studs in loadbearing walls (continued) (see 8.5.1.1) – VSG 8 and MSG 8

1.5 kPa and 2 kPa floor load

C Lower of two storeys or subfloor beneath one storey

Wind zone	Loaded dimen-sion* of wall	Stud sizes for maximum length (height) of: (m)								
		2.4			2.7			3		
		At maximum stud spacing (mm) of:			At maximum stud spacing (mm) of:			At maximum stud spacing (mm) of:		
		400	480	600	400	480	600	400	480	600
	(m)	(mm x mm)	(mm x mm)	(mm x mm)	(mm x mm)	(mm x mm)	(mm x mm)	(mm x mm)	(mm x mm)	(mm x mm)
		(Width x thickness)								
Very high	3.0	90 x 45	90 x 45	90 x 70	90 x 70	90 x 70	90 x 90	90 x 70	90 x 90	90 x 90
	4.5	90 x 45	90 x 70	90 x 70	90 x 70	90 x 70	90 x 90	90 x 70	90 x 90	90 x 90
	6.0	90 x 45	90 x 70	90 x 70	90 x 70	90 x 70	90 x 90	90 x 70	90 x 90	140 x 45
High	3.0	90 x 35	90 x 45	90 x 70	90 x 45	90 x 70	90 x 70	90 x 70	90 x 70	90 x 90
	4.5	90 x 35	90 x 45	90 x 70	90 x 45	90 x 70	90 x 70	90 x 70	90 x 70	90 x 90
	6.0	90 x 35	90 x 45	90 x 70	90 x 45	90 x 70	90 x 70	90 x 70	90 x 70	90 x 90
Medium	3.0	70 x 45	90 x 35	90 x 35	90 x 35	90 x 35	90 x 45	90 x 45	90 x 45	90 x 70
	4.5	70 x 45	90 x 35	90 x 45	90 x 35	90 x 45	90 x 70	90 x 45	90 x 45	90 x 70
	6.0	70 x 45	90 x 35	90 x 45	90 x 35	90 x 45	90 x 70	90 x 45	90 x 70	90 x 70
Low	3.0	70 x 35	70 x 45	90 x 35	70 x 45	90 x 35	90 x 45	90 x 35	90 x 35	90 x 45
	4.5	70 x 45	70 x 45	90 x 35	70 x 45	90 x 35	90 x 45	90 x 35	90 x 45	90 x 70
	6.0	70 x 45	70 x 45	90 x 35	90 x 35	90 x 35	90 x 45	90 x 35	90 x 45	90 x 70
Internal walls	3.0	70 x 35	70 x 45	90 x 35	70 x 45	90 x 35	90 x 45	90 x 35	90 x 35	90 x 45
	4.5	70 x 35	70 x 45	90 x 35	70 x 45	90 x 35	90 x 45	90 x 35	90 x 45	90 x 70
	6.0	70 x 45	70 x 45	90 x 35	90 x 35	90 x 35	90 x 45	90 x 35	90 x 45	90 x 70

* For definition of loaded dimension see 1.3.

NOTE –

(1) Determine the loaded dimension of the wall at floor level and the loaded dimension of the wall above at roof level and use the greater value in this table.

(2) 140 x 45 may be substituted for 90 x 90.
90 x 35 may be substituted for 70 x 45.

(3) Studs 70 mm and 90 mm thick may be replaced with studs of 35 mm and 45 mm thickness respectively, provided they are placed at no more than one half the spacing required for the 70 mm and 90 mm stud they are replacing.

(4) Studs 70 mm and 90 mm thick may be substituted with built-up members sized in accordance with 8.5.1.2 and nailed together in accordance with 2.4.4.7.

Amd 2
May '06

© The Crown in right of New Zealand, administered by the New Zealand Standards Executive. Access to this standard has been sponsored by the Ministry of Business, Innovation, and Employment under copyright license LN001498. You are not permitted to reproduce or distribute any part of this standard without prior written permission from Standards New Zealand, on behalf of New Zealand Standards Executive, unless your actions are covered by Part 3 of the Copyright Act 1994.

Copyright Standards New Zealand

Table 8.2 – Studs in loadbearing walls (continued) (see 8.5.1.1) – VSG 8 and MSG 8

1.5 kPa and 2 kPa floor load

D Subfloor beneath two storeys

Wind zone	Loaded dimen-sion* of wall	Stud sizes for maximum length (height) of: (m)								
		2.4			2.7			3		
		At maximum stud spacing (mm) of:			At maximum stud spacing (mm) of:			At maximum stud spacing (mm) of:		
		400	480	600	400	480	600	400	480	600
	(m)	(mm x mm)	(mm x mm)	(mm x mm)	(mm x mm)	(mm x mm)	(mm x mm)	(mm x mm)	(mm x mm)	(mm x mm)
		(Width x thickness)								
Very high	3.0	90 x 45	90 x 70	90 x 70	90 x 70	90 x 70	90 x 90	90 x 70	90 x 90	140 x 45
	4.5	90 x 45	90 x 70	90 x 70	90 x 70	90 x 70	90 x 90	90 x 70	90 x 90	140 x 45
	6.0	90 x 45	90 x 70	90 x 70	90 x 70	90 x 70	90 x 90	90 x 70	90 x 90	140 x 45
High	3.0	90 x 35	90 x 45	90 x 70	90 x 45	90 x 70	90 x 70	90 x 70	90 x 70	90 x 90
	4.5	90 x 35	90 x 45	90 x 70	90 x 45	90 x 70	90 x 70	90 x 70	90 x 70	90 x 90
	6.0	90 x 45	90 x 45	90 x 70	90 x 45	90 x 70	90 x 70	90 x 70	90 x 70	90 x 90
Medium	3.0	90 x 35	90 x 35	90 x 45	90 x 35	90 x 45	90 x 70	90 x 45	90 x 70	90 x 70
	4.5	90 x 35	90 x 35	90 x 45	90 x 35	90 x 45	90 x 70	90 x 45	90 x 70	90 x 70
	6.0	90 x 35	90 x 35	90 x 45	90 x 45	90 x 45	90 x 70	90 x 45	90 x 70	90 x 70
Low	3.0	70 x 45	90 x 35	90 x 35	90 x 35	90 x 35	90 x 45	90 x 35	90 x 45	90 x 70
	4.5	70 x 45	90 x 35	90 x 35	90 x 35	90 x 35	90 x 45	90 x 35	90 x 45	90 x 70
	6.0	70 x 45	90 x 35	90 x 45	90 x 35	90 x 45	90 x 45	90 x 45	90 x 45	90 x 70
Internal walls	3.0	70 x 45	90 x 35	90 x 35	90 x 35	90 x 35	90 x 45	90 x 35	90 x 45	90 x 70
	4.5	70 x 45	90 x 35	90 x 35	90 x 35	90 x 35	90 x 45	90 x 35	90 x 45	90 x 70
	6.0	70 x 45	90 x 35	90 x 45	90 x 35	90 x 45	90 x 45	90 x 45	90 x 45	90 x 70

* For definition of loaded dimension see 1.3.

NOTE –

(1) Determine the loaded dimension of the subfloor wall at floor level and the loaded dimension of the walls above at floor and roof levels and use the greatest value in this table.

(2) 140 x 45 may be substituted for 90 x 90.
90 x 35 may be substituted for 70 x 45.

(3) Studs 70 mm and 90 mm thick may be replaced with studs of 35 mm and 45 mm thickness respectively, provided they are placed at no more than one half the spacing required for the 70 mm and 90 mm stud they are replacing.

(4) Studs 70 mm and 90 mm thick may be substituted with built-up members sized in accordance with 8.5.1.2 and nailed together in accordance with 2.4.4.7.

Amd 2 May '06

© The Crown in right of New Zealand, administered by the New Zealand Standards Executive. Access to this standard has been sponsored by the Ministry of Business, Innovation, and Employment under copyright license LN001498. You are not permitted to reproduce or distribute any part of this standard without prior written permission from Standards New Zealand, on behalf of New Zealand Standards Executive, unless your actions are covered by Part 3 of the Copyright Act 1994.

Copyright Standards New Zealand

Table 8.2 – Studs in loadbearing walls (see 8.5.1.1) – VSG 10 and MSG 10

1.5 kPa and 2 kPa floor loads

A Single or top storey – Light roof

Wind Zone	Loaded dimension* of wall	Stud sizes for maximum length (height) of: (m)								
		2.4			2.7			3		
		At maximum stud spacing (mm) of:			At maximum stud spacing (mm) of:			At maximum stud spacing (mm) of:		
		400	480	600	400	480	600	400	480	600
	(m)	(mm x mm)	(mm x mm)	(mm x mm)	(mm x mm)	(mm x mm)	(mm x mm)	(mm x mm)	(mm x mm)	(mm x mm)
		(Width x thickness)								
Very high	3.0	70 x 45	90 x 35	90 x 45	90 x 35	90 x 45	90 x 45	90 x 45	90 x 70	90 x 70
	4.5	70 x 45	90 x 35	90 x 45	90 x 35	90 x 45	90 x 70	90 x 45	90 x 70	90 x 70
	6.0	70 x 45	90 x 35	90 x 45	90 x 35	90 x 45	90 x 70	90 x 45	90 x 70	90 x 70
High	3.0	70 x 35	70 x 45	90 x 35	90 x 35	90 x 35	90 x 35	90 x 35	90 x 45	90 x 70
	4.5	70 x 35	70 x 45	90 x 35	90 x 35	90 x 35	90 x 45	90 x 35	90 x 45	90 x 70
	6.0	70 x 35	70 x 45	90 x 35	90 x 35	90 x 35	90 x 45	90 x 35	90 x 45	90 x 70
Medium	3.0	70 x 35	70 x 35	70 x 35	70 x 35	70 x 45	70 x 45	90 x 35	90 x 35	90 x 35
	4.5	70 x 35	70 x 35	70 x 45	70 x 35	70 x 45	90 x 35	90 x 35	90 x 35	90 x 35
	6.0	70 x 35	70 x 35	70 x 45	70 x 35	70 x 45	90 x 35	90 x 35	90 x 35	90 x 35
Low	3.0	70 x 35	70 x 35	70 x 35	70 x 35	70 x 35	70 x 35	70 x 35	70 x 45	90 x 35
	4.5	70 x 35	70 x 35	70 x 35	70 x 35	70 x 35	70 x 45	70 x 35	70 x 45	90 x 35
	6.0	70 x 35	70 x 35	70 x 35	70 x 35	70 x 35	70 x 45	70 x 35	70 x 45	90 x 35
Internal walls	3.0	70 x 35	70 x 35	70 x 35	70 x 35	70 x 35	70 x 35	70 x 35	70 x 45	90 x 35
	4.5	70 x 35	70 x 35	70 x 35	70 x 35	70 x 35	70 x 45	70 x 35	70 x 45	90 x 35
	6.0	70 x 35	70 x 35	70 x 35	70 x 35	70 x 35	70 x 45	70 x 35	70 x 45	90 x 35
		3.6			4.2			4.8		
		At maximum stud spacing (mm) of:			At maximum stud spacing (mm) of:			At maximum stud spacing (mm) of:		
		400	480	600	400	480	600	400	480	600
	(m)	(mm x mm)	(mm x mm)	(mm x mm)	(mm x mm)	(mm x mm)	(mm x mm)	(mm x mm)	(mm x mm)	(mm x mm)
		(Width x thickness)								
Very high	3.0	90 x 90	140 x 45	140 x 45	140 x 45	140 x 70	140 x 70	190 x 45	190 x 45	190 x 45
	4.5	90 x 90	140 x 45	140 x 45	140 x 45	140 x 70	140 x 70	190 x 45	190 x 45	190 x 45
	6.0	90 x 90	140 x 45	140 x 45	140 x 45	140 x 70	140 x 70	190 x 45	190 x 45	190 x 45
High	3.0	90 x 70	90 x 90	140 x 45	140 x 45	140 x 45	140 x 70	140 x 70	140 x 70	190 x 45
	4.5	90 x 70	90 x 90	140 x 45	140 x 45	140 x 45	140 x 70	140 x 70	140 x 70	190 x 45
	6.0	90 x 70	90 x 90	140 x 45	140 x 45	140 x 45	140 x 70	140 x 70	140 x 70	190 x 45
Medium	3.0	90 x 45	90 x 70	90 x 70	90 x 90	140 x 45	140 x 45	140 x 45	140 x 45	140 x 70
	4.5	90 x 45	90 x 70	90 x 70	90 x 90	140 x 45	140 x 45	140 x 45	140 x 45	140 x 70
	6.0	90 x 45	90 x 70	90 x 70	90 x 90	140 x 45	140 x 45	140 x 45	140 x 45	140 x 70
Low	3.0	90 x 35	90 x 45	90 x 70	90 x 70	90 x 90	140 x 45	140 x 45	140 x 45	140 x 45
	4.5	90 x 35	90 x 45	90 x 70	90 x 70	90 x 90	140 x 45	140 x 45	140 x 45	140 x 45
	6.0	90 x 35	90 x 45	90 x 70	90 x 70	90 x 90	140 x 45	140 x 45	140 x 45	140 x 45
Internal walls	3.0	90 x 35	90 x 45	90 x 70	90 x 70	90 x 90	140 x 45	140 x 45	140 x 45	140 x 45
	4.5	90 x 35	90 x 45	90 x 70	90 x 70	90 x 90	140 x 45	140 x 45	140 x 45	140 x 45
	6.0	90 x 35	90 x 45	90 x 70	90 x 70	90 x 90	140 x 45	140 x 45	140 x 45	140 x 45

* For definition of loaded dimension see 1.3.

NOTE –

(1) Studs 70 mm and 90 mm thick may be replaced with studs of 35 mm and 45 mm thickness respectively, provided they are placed at no more than one half the spacing required for the 70 mm and 90 mm stud they are replacing.

(2) 140 x 45 may be substituted for 90 x 90. 90 x 35 may be substituted for 70 x 45.

(3) Studs 70 mm and 90 mm thick may be substituted with built-up members sized in accordance with 8.5.1.2 and nailed together in accordance with 2.4.4.7.

Amd 2
May '06

© The Crown in right of New Zealand, administered by the New Zealand Standards Executive. Access to this standard has been sponsored by the Ministry of Business, Innovation, and Employment under copyright license LN001498. You are not permitted to reproduce or distribute any part of this standard without prior written permission from Standards New Zealand, on behalf of New Zealand Standards Executive, unless your actions are covered by Part 3 of the Copyright Act 1994.

Copyright Standards New Zealand

Table 8.2 – Studs in loadbearing walls (continued) (see 8.5.1.1) – VSG 10 and MSG 10

1.5 kPa and 2 kPa floor loads

B Single or top storey – Heavy roof

Wind zone	Loaded dimension* of wall	Stud sizes for maximum length (height) of: (m)								
		2.4			2.7			3		
		At maximum stud spacing (mm) of:			At maximum stud spacing (mm) of:			At maximum stud spacing (mm) of:		
		400	480	600	400	480	600	400	480	600
	(m)	(mm x mm)	(mm x mm)	(mm x mm)	(mm x mm)	(mm x mm)	(mm x mm)	(mm x mm)	(mm x mm)	(mm x mm)
		(Width x thickness)								
Very high	3.0	70 x 45	90 x 35	90 x 45	90 x 35	90 x 45	90 x 70	90 x 45	90 x 70	90 x 70
	4.5	70 x 45	90 x 35	90 x 45	90 x 35	90 x 45	90 x 70	90 x 45	90 x 70	90 x 70
	6.0	90 x 35	90 x 35	90 x 45	90 x 35	90 x 45	90 x 70	90 x 45	90 x 70	90 x 70
High	3.0	70 x 35	70 x 45	90 x 35	90 x 35	90 x 35	90 x 45	90 x 35	90 x 45	90 x 70
	4.5	70 x 45	70 x 45	90 x 35	90 x 35	90 x 35	90 x 45	90 x 35	90 x 45	90 x 70
	6.0	70 x 45	70 x 45	90 x 35	90 x 35	90 x 35	90 x 45	90 x 35	90 x 45	90 x 70
Medium	3.0	70 x 35	70 x 35	70 x 45	70 x 35	70 x 45	90 x 35	90 x 35	90 x 35	90 x 35
	4.5	70 x 35	70 x 35	70 x 45	70 x 35	70 x 45	90 x 35	90 x 35	90 x 35	90 x 45
	6.0	70 x 35	70 x 35	70 x 45	70 x 45	70 x 45	90 x 35	90 x 35	90 x 35	90 x 45
Low	3.0	70 x 35	70 x 35	70 x 35	70 x 35	70 x 35	70 x 45	70 x 35	70 x 45	90 x 35
	4.5	70 x 35	70 x 35	70 x 35	70 x 35	70 x 35	70 x 45	70 x 35	70 x 45	90 x 35
	6.0	70 x 35	70 x 35	70 x 45	70 x 35	70 x 45	70 x 45	70 x 45	70 x 45	90 x 35
Internal walls	3.0	70 x 35	70 x 35	70 x 35	70 x 35	70 x 35	70 x 45	70 x 35	70 x 45	90 x 35
	4.5	70 x 35	70 x 35	70 x 35	70 x 35	70 x 35	70 x 45	70 x 35	70 x 45	90 x 35
	6.0	70 x 35	70 x 35	70 x 35	70 x 35	70 x 45	70 x 45	70 x 45	70 x 45	90 x 35
		3.6			4.2			4.8		
		At maximum stud spacing (mm) of:			At maximum stud spacing (mm) of:			At maximum stud spacing (mm) of:		
		400	480	600	400	480	600	400	480	600
	(m)	(mm x mm)	(mm x mm)	(mm x mm)	(mm x mm)	(mm x mm)	(mm x mm)	(mm x mm)	(mm x mm)	(mm x mm)
		(Width x thickness)								
Very High	3.0	90 x 90	140 x 45	140 x 45	140 x 45	140 x 70	140 x 70	190 x 45	190 x 45	190 x 45
	4.5	90 x 90	140 x 45	140 x 45	140 x 45	140 x 70	140 x 70	190 x 45	190 x 45	190 x 45
	6.0	90 x 90	140 x 45	140 x 45	140 x 45	140 x 70	140 x 70	190 x 45	190 x 45	190 x 45
High	3.0	90 x 70	90 x 90	140 x 45	140 x 45	140 x 45	140 x 70	140 x 70	140 x 70	190 x 45
	4.5	90 x 70	90 x 90	140 x 45	140 x 45	140 x 45	140 x 70	140 x 70	140 x 70	190 x 45
	6.0	90 x 70	90 x 90	140 x 45	140 x 45	140 x 45	140 x 70	140 x 70	140 x 70	190 x 45
Medium	3.0	90 x 45	90 x 70	90 x 70	90 x 90	140 x 45	140 x 45	140 x 45	140 x 45	140 x 70
	4.5	90 x 45	90 x 70	90 x 70	90 x 90	140 x 45	140 x 45	140 x 45	140 x 45	140 x 70
	6.0	90 x 45	90 x 70	90 x 70	90 x 90	140 x 45	140 x 45	140 x 45	140 x 45	140 x 70
Low	3.0	90 x 35	90 x 45	90 x 70	90 x 70	90 x 90	140 x 45	140 x 45	140 x 45	140 x 45
	4.5	90 x 35	90 x 45	90 x 70	90 x 70	90 x 90	140 x 45	140 x 45	140 x 45	140 x 45
	6.0	90 x 35	90 x 45	90 x 70	90 x 70	90 x 90	140 x 45	140 x 45	140 x 45	140 x 45
Internal walls	3.0	90 x 35	90 x 45	90 x 70	90 x 70	90 x 90	140 x 45	140 x 45	140 x 45	140 x 45
	4.5	90 x 35	90 x 45	90 x 70	90 x 70	90 x 90	140 x 45	140 x 45	140 x 45	140 x 45
	6.0	90 x 35	90 x 45	90 x 70	90 x 70	90 x 90	140 x 45	140 x 45	140 x 45	140 x 45

* For definition of loaded dimension see 1.3.

NOTE –

(1) Studs 70 mm and 90 mm thick may be replaced with studs of 35 mm and 45 mm thickness respectively, provided they are placed at no more than one half the spacing required for the 70 mm and 90 mm stud they are replacing.

(2) 140 x 45 may be substituted for 90 x 90. 90 x 35 may be substituted for 70 x 45.

(3) Studs 70 mm and 90 mm thick may be substituted with built-up members sized in accordance with 8.5.1.2 and nailed together in accordance with 2.4.4.7.

Amd 2 May '06

© The Crown in right of New Zealand, administered by the New Zealand Standards Executive. Access to this standard has been sponsored by the Ministry of Business, Innovation, and Employment under copyright license LN001498. You are not permitted to reproduce or distribute any part of this standard without prior written permission from Standards New Zealand, on behalf of New Zealand Standards Executive, unless your actions are covered by Part 3 of the Copyright Act 1994.

Current Standards NZ

© The Crown in right of New Zealand, administered by the New Zealand Standards Executive. Access to this standard has been sponsored by the Ministry of Business, Innovation, and Employment under copyright license LN001498. You are not permitted to reproduce or distribute any part of this standard without prior written permission from Standards New Zealand, on behalf of New Zealand Standards Executive, unless your actions are covered by Part 3 of the Copyright Act 1994.

Table 8.2 – Studs in loadbearing walls (continued) (see 8.5.1.1) **– VSG 10 and MSG 10**

1.5 kPa and 2 kPa floor loads

C Lower of two storeys or subfloor beneath one storey

Wind zone	Loaded dimen-sion* of wall	Stud sizes for maximum length (height) of: (m)								
		2.4			2.7			3		
		At maximum stud spacing (mm) of:			At maximum stud spacing (mm) of:			At maximum stud spacing (mm) of:		
		400	480	600	400	480	600	400	480	600
	(m)	(mm x mm)	(mm x mm)	(mm x mm)	(mm x mm)	(mm x mm)	(mm x mm)	(mm x mm)	(mm x mm)	(mm x mm)
		(Width x thickness)								
Very high	3.0	90 x 35	90 x 35	90 x 45	90 x 35	90 x 45	90 x 70	90 x 45	90 x 70	90 x 70
	4.5	90 x 35	90 x 35	90 x 45	90 x 35	90 x 45	90 x 70	90 x 45	90 x 70	90 x 70
	6.0	90 x 35	90 x 45	90 x 45	90 x 45	90 x 45	90 x 70	90 x 45	90 x 70	90 x 70
High	3.0	70 x 45	90 x 35	90 x 35	90 x 35	90 x 35	90 x 45	90 x 35	90 x 45	90 x 70
	4.5	70 x 45	90 x 35	90 x 45	90 x 35	90 x 45	90 x 45	90 x 45	90 x 45	90 x 70
	6.0	70 x 45	90 x 35	90 x 45	90 x 35	90 x 45	90 x 70	90 x 45	90 x 45	90 x 70
Medium	3.0	70 x 35	70 x 45	90 x 35	70 x 45	90 x 35	90 x 35	90 x 35	90 x 35	90 x 45
	4.5	70 x 35	70 x 45	90 x 35	70 x 45	90 x 35	90 x 35	90 x 35	90 x 35	90 x 45
	6.0	70 x 35	70 x 45	90 x 35	70 x 45	90 x 35	90 x 45	90 x 35	90 x 45	90 x 45
Low	3.0	70 x 35	70 x 35	70 x 45	70 x 35	70 x 45	90 x 35	70 x 45	90 x 35	90 x 35
	4.5	70 x 35	70 x 35	70 x 45	70 x 35	70 x 45	90 x 35	70 x 45	90 x 35	90 x 45
	6.0	70 x 35	70 x 35	70 x 45	70 x 45	70 x 45	90 x 35	90 x 35	90 x 35	90 x 45
Internal walls	3.0	70 x 35	70 x 35	70 x 45	70 x 35	70 x 45	90 x 35	70 x 45	90 x 35	90 x 35
	4.5	70 x 35	70 x 35	70 x 45	70 x 35	70 x 45	90 x 35	70 x 45	90 x 35	90 x 35
	6.0	70 x 35	70 x 35	70 x 45	70 x 45	70 x 45	90 x 35	90 x 35	90 x 35	90 x 45

* For definition of loaded dimension see 1.3.

NOTE –

(1) Determine the loaded dimension of the wall at floor level and the loaded dimension of the wall above at roof level and use the greater value in this table.

(2) 90 x 35 may be substituted for 70 x 45.

(3) Studs 70 mm and 90 mm thick may be replaced with studs of 35 mm and 45 mm thickness respectively, provided they are placed at no more than one half the spacing required for the 70 mm and 90 mm stud they are replacing.

(4) Studs 70 mm and 90 mm thick may be substituted with built-up members sized in accordance with 8.5.1.2 and nailed together in accordance with 2.4.4.7.

Amd 2
May '06

© The Crown in right of New Zealand, administered by the New Zealand Standards Executive. Access to this standard has been sponsored by the Ministry of Business, Innovation, and Employment under copyright license LN001498. You are not permitted to reproduce or distribute any part of this standard without prior written permission from Standards New Zealand, on behalf of New Zealand Standards Executive, unless your actions are covered by Part 3 of the Copyright Act 1994.

Table 8.2 – Studs in loadbearing walls (continued) (see 8.5.1.1) – VSG 10 and MSG 10

1.5 kPa and 2 kPa floor loads

D Subfloor beneath two storeys

Wind zone	Loaded dimen-sion* of wall	Stud sizes for maximum length (height) of: (m)								
		2.4			2.7			3		
		At maximum stud spacing (mm) of:			At maximum stud spacing (mm) of:			At maximum stud spacing (mm) of:		
		400	480	600	400	480	600	400	480	600
	(m)	(mm x mm)	(mm x mm)	(mm x mm)	(mm x mm)	(mm x mm)	(mm x mm)	(mm x mm)	(mm x mm)	(mm x mm)
		(Width x thickness)								
Very high	3.0	90 x 35	90 x 45	90 x 70	90 x 45	90 x 70	90 x 70	90 x 70	90 x 70	90 x 70
	4.5	90 x 35	90 x 45	90 x 70	90 x 45	90 x 70	90 x 70	90 x 70	90 x 70	90 x 90
	6.0	90 x 35	90 x 45	90 x 70	90 x 45	90 x 70	90 x 70	90 x 70	90 x 70	90 x 90
High	3.0	70 x 45	90 x 35	90 x 45	90 x 35	90 x 45	90 x 70	90 x 45	90 x 70	90 x 70
	4.5	90 x 35	90 x 35	90 x 45	90 x 35	90 x 45	90 x 70	90 x 45	90 x 70	90 x 70
	6.0	90 x 35	90 x 35	90 x 45	90 x 35	90 x 45	90 x 70	90 x 45	90 x 70	90 x 70
Medium	3.0	70 x 45	70 x 45	90 x 35	90 x 35	90 x 35	90 x 45	90 x 35	90 x 45	90 x 70
	4.5	70 x 45	90 x 35	90 x 35	90 x 35	90 x 35	90 x 45	90 x 35	90 x 45	90 x 70
	6.0	70 x 45	90 x 35	90 x 35	90 x 35	90 x 35	90 x 45	90 x 35	90 x 45	90 x 70
Low	3.0	70 x 35	70 x 45	90 x 35	70 x 45	90 x 35	90 x 35	90 x 35	90 x 35	90 x 45
	4.5	70 x 35	70 x 45	90 x 35	70 x 45	90 x 35	90 x 35	90 x 35	90 x 35	90 x 45
	6.0	70 x 35	70 x 45	90 x 35	70 x 45	90 x 35	90 x 45	90 x 35	90 x 35	90 x 45
Internal walls	3.0	70 x 35	70 x 45	90 x 35	70 x 45	90 x 35	90 x 35	90 x 35	90 x 35	90 x 45
	4.5	70 x 35	70 x 45	90 x 35	70 x 45	90 x 35	90 x 35	90 x 35	90 x 35	90 x 45
	6.0	70 x 35	70 x 45	90 x 35	70 x 45	90 x 35	90 x 45	90 x 35	90 x 35	90 x 45

* For definition of loaded dimension see 1.3.

NOTE –

(1) Determine the loaded dimension of the subfloor wall at floor level and the loaded dimension of the walls above at floor and roof levels and use the greatest value in this table.

(2) 140 x 45 may be substituted for 90 x 90.
90 x 35 may be substituted for 70 x 45.

(3) Studs 70 mm and 90 mm thick may be replaced with studs of 35 mm and 45 mm thickness respectively, provided they are placed at no more than one half the spacing required for the 70 mm and 90 mm stud they are replacing.

(4) Studs 70 mm and 90 mm thick may be substituted with built-up members sized in accordance with 8.5.1.2 and nailed together in accordance with 2.4.4.7.

Amd 2
May '06

© The Crown in right of New Zealand, administered by the New Zealand Standards Executive. Access to this standard has been sponsored by the Ministry of Business, Innovation, and Employment under copyright license LN001498. You are not permitted to reproduce or distribute any part of this standard without prior written permission from Standards New Zealand, on behalf of New Zealand Standards Executive, unless your actions are covered by Part 3 of the Copyright Act 1994.

Table 8.3 – No. 2 Framing in internal non-loadbearing walls (see 8.5.1.1)

Amd 2 May '06

	Maximum length (height) of stud	Minimum stud size for maximum spacing of studs (mm) of:		
		400	480	600
Internal non-loadbearing walls in all wind zones	(m)	(mm x mm)	(mm x mm)	(mm x mm)
	2.4	70 x 45	70 x 45	90 x 35
	2.7	90 x 35	90 x 35	90 x 45
	3.0	90 x 35	90 x 35	90 x 45

Copyright Standards New Zealand

© The Crown in right of New Zealand, administered by the New Zealand Standards Executive. Access to this standard has been sponsored by the Ministry of Business, Innovation, and Employment under copyright license LN001498. You are not permitted to reproduce or distribute any part of this standard without prior written permission from Standards New Zealand, on behalf of New Zealand Standards Executive, unless your actions are covered by Part 3 of the Copyright Act 1994.

Table 8.4 – Studs in non-loadbearing walls (see 8.5.1.1 and figure 8.2) **– No. 1 Framing and MSG 6**

Wind Zone	Maximum length (height) of stud	Stud size for maximum spacing of studs (mm) of:		
		400	480	600
	(m)	(mm x mm)	(mm x mm)	(mm x mm)
		(Width x thickness)		
Very high	2.4	90 x 45	90 x 70	90 x 70
	2.7	90 x 70	90 x 70	90 x 90
	3.0	90 x 90	140 x 45	140 x 45
High	2.4	90 x 35	90 x 45	90 x 70
	2.7	90 x 45	90 x 70	90 x 70
	3.0	90 x 70	90 x 90	140 x 45
	3.3	140 x 45	140 x 45	140 x 45
	3.6	140 x 45	140 x 45	140 x 70
	3.9	140 x 70	140 x 70	190 x 45
	4.2	140 x 70	190 x 45	190 x 45
	4.8	190 x 45	190 x 70	190 x 70
Medium	2.4	70 x 45	90 x 35	90 x 45
	2.7	90 x 35	90 x 45	90 x 70
	3.0	90 x 45	90 x 70	90 x 70
	3.3	90 x 70	90 x 90	90 x 90
	3.6	90 x 90	140 x 45	140 x 45
	3.9	140 x 45	140 x 45	140 x 70
	4.2	140 x 45	140 x 70	140 x 70
	4.8	140 x 70	190 x 45	190 x 45
Low	2.4	70 x 35	70 x 45	70 x 45
	2.7	70 x 45	90 x 35	90 x 35
	3.0	90 x 35	90 x 45	90 x 70
	3.3	90 x 45	90 x 70	90 x 70
	3.6	90 x 70	90 x 90	140 x 45
	3.9	90 x 90	140 x 45	140 x 45
	4.2	140 x 45	140 x 45	140 x 70
	4.8	140 x 70	140 x 70	190 x 45
Internal walls in all wind zones	2.4	70 x 35	70 x 45	70 x 45
	2.7	70 x 45	90 x 35	90 x 35
	3.0	90 x 35	90 x 45	90 x 70
	3.3	90 x 45	90 x 70	90 x 70
	3.6	90 x 70	90 x 90	140 x 45
	3.9	90 x 90	140 x 45	140 x 45
	4.2	140 x 45	140 x 45	140 x 70
	4.8	140 x 70	140 x 70	190 x 45

NOTE –

(1) 90 x 35 may be substituted for 70 x 45.
140 x 45 may be substituted for 90 x 90.

(2) Studs 70 mm and 90 mm thick may be replaced with studs of 35 mm and 45 mm thickness respectively, provided they are placed at no more than one half the spacing required for the 70 mm and 90 mm stud they are replacing.

(3) Studs 70 mm and 90 mm thick may be substituted with built-up members sized in accordance with 8.5.1.2 and nailed together in accordance with 2.4.4.7.

Amd 2
May '06

Copyright Standards New Zealand

© The Crown in right of New Zealand, administered by the New Zealand Standards Executive. Access to this standard has been sponsored by the Ministry of Business, Innovation, and Employment under copyright license LN001498. You are not permitted to reproduce or distribute any part of this standard without prior written permission from Standards New Zealand, on behalf of New Zealand Standards Executive, unless your actions are covered by Part 3 of the Copyright Act 1994.

Table 8.4 – Studs in non-loadbearing walls (see 8.5.1.1 and figure 8.2) **– VSG 8 and MSG 8**

Wind Zone	Maximum length (height) of stud	Stud size for maximum spacing of studs (mm) of:		
		400	480	600
	(m)	(mm x mm)	(mm x mm)	(mm x mm)
		(Width x thickness)		
Very high	2.4	90 x 35	90 x 45	90 x 70
	2.7	90 x 45	90 x 70	90 x 70
	3.0	90 x 70	90 x 90	90 x 90
High	2.4	70 x 45	90 x 35	90 x 45
	2.7	90 x 35	90 x 45	90 x 70
	3.0	90 x 70	90 x 70	90 x 70
	3.3	90 x 70	90 x 90	140 x 45
	3.6	140 x 45	140 x 45	140 x 45
	3.9	140 x 45	140 x 45	140 x 70
	4.2	140 x 70	140 x 70	190 x 45
	4.8	190 x 45	190 x 45	190 x 70
Medium	2.4	70 x 35	70 x 35	70 x 45
	2.7	70 x 45	90 x 35	90 x 35
	3.0	90 x 35	90 x 45	90 x 45
	3.3	90 x 45	90 x 70	90 x 70
	3.6	90 x 70	90 x 90	140 x 45
	3.9	90 x 90	140 x 45	140 x 45
	4.2	140 x 45	140 x 45	140 x 70
	4.8	140 x 70	140 x 70	190 x 45
Low	2.4	70 x 35	70 x 35	70 x 35
	2.7	70 x 35	70 x 45	90 x 35
	3.0	90 x 35	90 x 35	90 x 35
	3.3	90 x 35	90 x 45	90 x 70
	3.6	90 x 70	90 x 70	90 x 70
	3.9	90 x 70	90 x 90	140 x 45
	4.2	90 x 90	140 x 45	140 x 45
	4.8	140 x 45	140 x 70	140 x 70
Internal walls in all wind zones	2.4	70 x 35	70 x 35	70 x 35
	2.7	70 x 35	70 x 45	90 x 35
	3.0	90 x 35	90 x 35	90 x 35
	3.3	90 x 35	90 x 45	90 x 70
	3.6	90 x 70	90 x 70	90 x 70
	3.9	90 x 70	90 x 90	140 x 45
	4.2	90 x 90	140 x 45	140 x 45
	4.8	140 x 45	140 x 70	140 x 70

NOTE –

(1) 90 x 35 may be substituted for 70 x 45.
140 x 45 may be substituted for 90 x 90.

(2) Studs 70 mm and 90 mm thick may be replaced with studs of 35 mm and 45 mm thickness respectively, provided they are placed at no more than one half the spacing required for the 70 mm and 90 mm stud they are replacing.

(3) Studs 70 mm and 90 mm thick may be substituted with built-up members sized in accordance with 8.5.1.2 and nailed together in accordance with 2.4.4.7.

Amd 2
May '06

Copyright Standards New Zealand

© The Crown in right of New Zealand, administered by the New Zealand Standards Executive. Access to this standard has been sponsored by the Ministry of Business, Innovation, and Employment under copyright license LN001498. You are not permitted to reproduce or distribute any part of this standard without prior written permission from Standards New Zealand, on behalf of New Zealand Standards Executive, unless your actions are covered by Part 3 of the Copyright Act 1994.

Table 8.4 – Studs in non-loadbearing walls (see 8.5.1.1 and figure 8.2) **– VSG 10 and MSG 10**

Wind Zone	Maximum length (height) of stud	Stud size for maximum spacing of studs (mm) of:		
		400	480	600
	(m)	(mm x mm)	(mm x mm)	(mm x mm)
		(Width x thickness)		
Very high	2.4	70 x 45	90 x 35	90 x 35
	2.7	90 x 35	90 x 35	90 x 45
	3.0	90 x 45	90 x 70	90 x 70
High	2.4	70 x 35	70 x 45	90 x 35
	2.7	90 x 35	90 x 35	90 x 35
	3.0	90 x 35	90 x 45	90 x 70
	3.3	90 x 70	90 x 70	90 x 90
	3.6	90 x 70	90 x 90	140 x 45
	3.9	140 x 45	140 x 45	140 x 45
	4.2	140 x 45	140 x 45	140 x 70
	4.8	140 x 70	140 x 70	190 x 45
Medium	2.4	70 x 35	70 x 35	70 x 35
	2.7	70 x 35	70 x 45	70 x 45
	3.0	90 x 35	90 x 35	90 x 35
	3.3	90 x 35	90 x 45	90 x 70
	3.6	90 x 45	90 x 70	90 x 70
	3.9	90 x 70	90 x 90	140 x 45
	4.2	90 x 90	140 x 45	140 x 45
	4.8	140 x 45	140 x 45	140 x 70
Low	2.4	70 x 35	70 x 35	70 x 35
	2.7	70 x 35	70 x 35	70 x 35
	3.0	70 x 35	70 x 45	90 x 35
	3.3	90 x 35	90 x 35	90 x 45
	3.6	90 x 35	90 x 45	90 x 70
	3.9	90 x 70	90 x 70	90 x 70
	4.2	90 x 70	90 x 90	140 x 45
	4.8	140 x 45	140 x 45	140 x 45
Internal walls in all wind zones	2.4	70 x 35	70 x 35	70 x 35
	2.7	70 x 35	70 x 35	70 x 35
	3.0	70 x 35	70 x 45	90 x 35
	3.3	90 x 35	90 x 35	90 x 45
	3.6	90 x 35	90 x 45	90 x 70
	3.9	90 x 70	90 x 70	90 x 70
	4.2	90 x 70	90 x 90	140 x 45
	4.8	140 x 45	140 x 45	140 x 45

NOTE –

(1) 90 x 35 may be substituted for 70 x 45.
140 x 45 may be substituted for 90 x 90.

(2) Studs 70 mm and 90 mm thick may be replaced with studs of 35 mm and 45 mm thickness respectively, provided they are placed at no more than one half the spacing required for the 70 mm and 90 mm stud they are replacing.

(3) Studs 70 mm and 90 mm thick may be substituted with built-up members sized in accordance with 8.5.1.2 and nailed together in accordance with 2.4.4.7.

Amd 2
May '06

Copyright Standards New Zealand

NOTES

© The Crown in right of New Zealand, administered by the New Zealand Standards Executive. Access to this standard has been sponsored by the Ministry of Business, Innovation, and Employment under copyright license LN001498. You are not permitted to reproduce or distribute any part of this standard without prior written permission from Standards New Zealand, on behalf of New Zealand Standards Executive, unless your actions are covered by Part 3 of the Copyright Act 1994.

Copyright Standards New Zealand

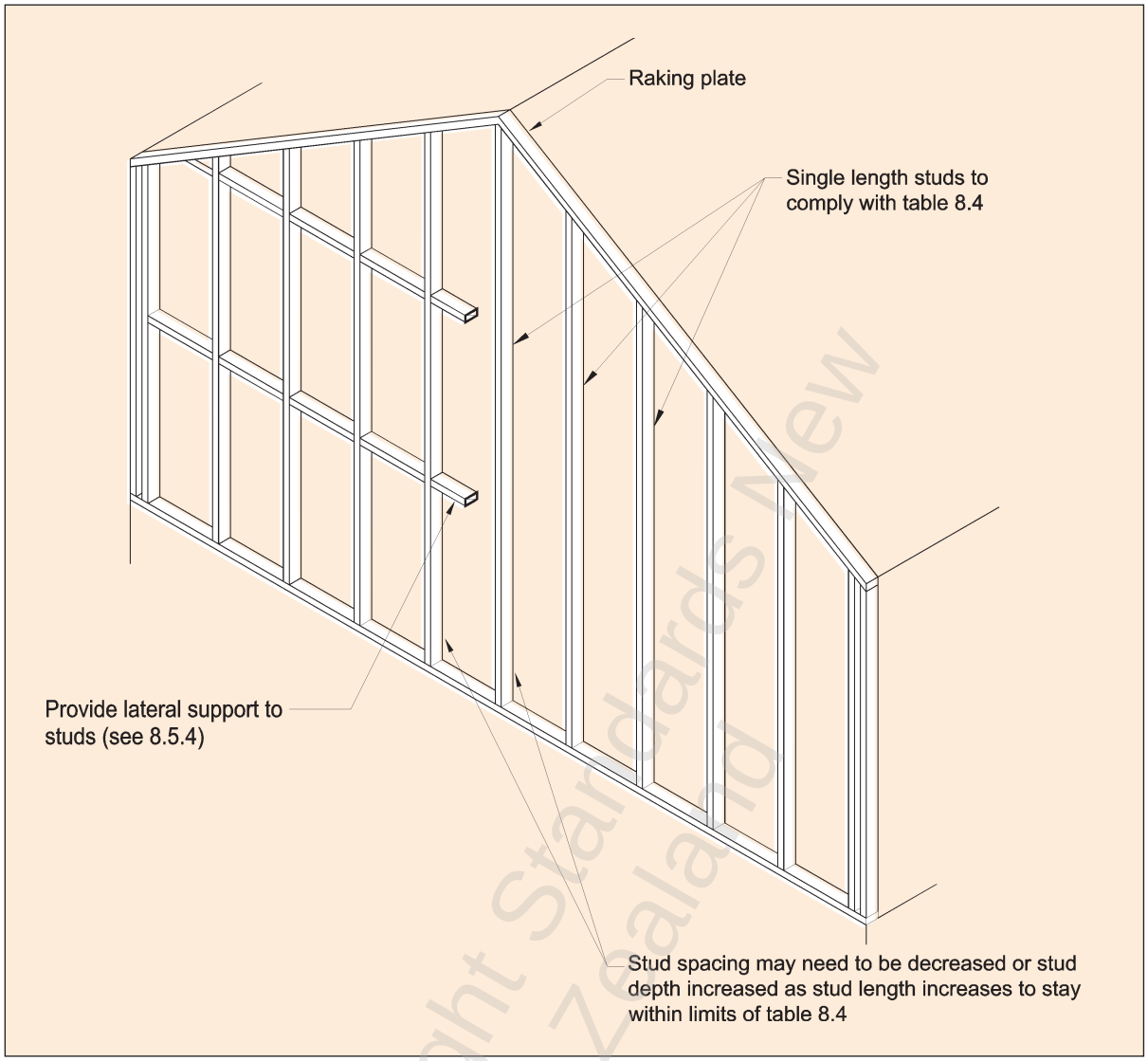

Figure 8.2 – Framing gable end walls to resist wind loads (skillion roofs) (see table 8.4)

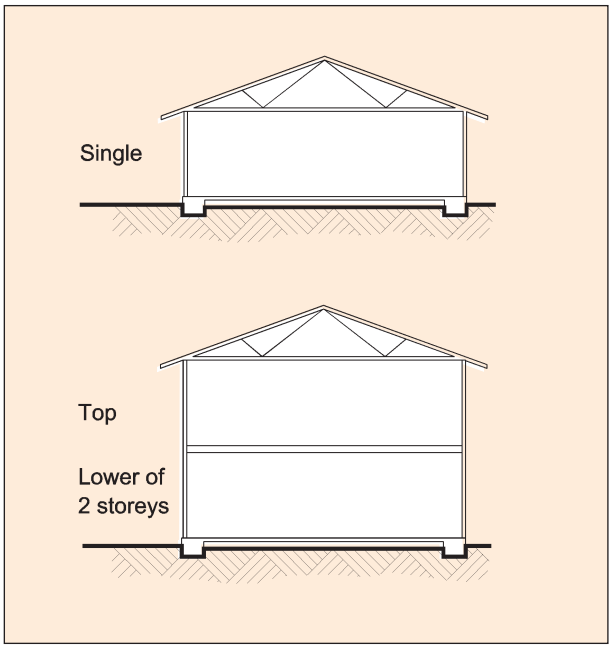

Figure 8.3 – Location of wall framing for the purposes of tables 8.2 (see C8.5.1.1)

Amd 2 May '06

© The Crown in right of New Zealand, administered by the New Zealand Standards Executive. Access to this standard has been sponsored by the Ministry of Business, Innovation, and Employment under copyright license LN001498. You are not permitted to reproduce or distribute any part of this standard without prior written permission from Standards New Zealand, on behalf of New Zealand Standards Executive, unless your actions are covered by Part 3 of the Copyright Act 1994.

Copyright Standards New Zealand

© The Crown in right of New Zealand, administered by the New Zealand Standards Executive. Access to this standard has been sponsored by the Ministry of Business, Innovation, and Employment under copyright license LN001498. You are not permitted to reproduce or distribute any part of this standard without prior written permission from Standards New Zealand, on behalf of New Zealand Standards Executive, unless your actions are covered by Part 3 of the Copyright Act 1994.

C8.5.1.3

Internal walls have been designed for, among other things, the effects of varying air pressures within a building (which can impose significant loadings during high winds if doors, windows, and the like are open or break). The design of internal walls ensures a minimum level of strength and stiffness for general serviceability.

8.5.1.3
For external walls the wind zone shall be as determined by tables 5.1 and 5.2. The requirements for internal walls as given in tables 8.3 and 8.4 can be used for any wind zone.

8.5.1.4
When both floors and roofs contribute load to a *loadbearing wall*, the *loaded dimension* for the wall shall be determined from the Note under table 8.2.

8.5.1.5 (deleted)

Amd 2 May '06

8.5.1.6
Wall junctions shall be framed up with not less than 2 *studs* blocked and nailed.

8.5.1.7
Holes in the face and notches in the edge of a *stud* (see figure 8.4) shall:

(a) Be placed anywhere over the face of the *stud* except that:

(i) In brick veneer *cladding*, holes shall be at least 50 mm clear of the outside face of the *stud* supporting the veneer, to prevent damage from the fixings to services.

(ii) For limitations on *trimming studs* see 8.5.2.

(b) Be not more in diameter or depth than:

Amd 2 May '06

(i) 70 mm deep *studs*: 19 mm. This may be increased to 22 mm for the purpose of fitting metal *diagonal braces*

Amd 2 May '06

(ii) 90 mm deep *studs*: 25 mm. This may be increased to 35 mm where not more than 3 consecutive *studs* are drilled or notched.

(c) Notches in *studs* to be *spaced* vertically not less than 600 mm apart, irrespective of the edge containing the notch.

Copyright Standards New Zealand

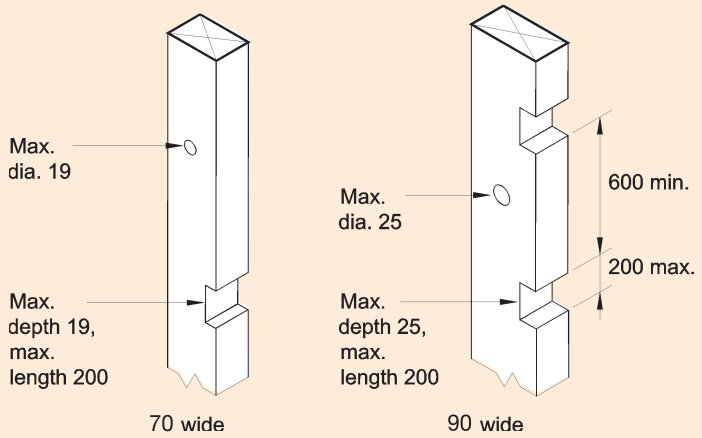

NOTE -
(1) For diagonal timber bracing the depth of notches in 70 wide timber may be increased to 22 (see 8.5.1.7(b)(i)). Amd 2 May '06
(2) For 90 wide studs the depth of notches and diameter of holes may be increased to 35 where no more than 3 consecutive studs are drilled or notched (see 8.5.1.7(b)(ii)). Amd 1 Dec '00
(3) Notches in studs to be spaced vertically 600 apart (independent of edge containing the notch).
(4) 100 min. offset between hole and notch. Amd 1 Dec '00 Amd 2 May '06

Figure 8.4 – Checking and boring studs (see 8.5.1.7)

8.5.2 *Trimming studs*

8.5.2.1
A *trimming stud* shall be provided to each side of any opening as follows (see figure 8.5 and table 8.5).

8.5.2.2
Trimming studs shall have the same width as the *studs* in the wall and subject to 8.5.2.3 shall have the thickness given by table 8.5.

8.5.2.3
Trimming studs, whether single or double, shall not contain holes, notches, checks, or cuts in the middle third of their length.

8.5.2.4
Where a doubling *stud* which provides support for a *lintel* is shorter by 400 mm or more than the full *stud* height, its thickness shall not be included as contributing to the thickness of *trimming studs* from table 8.5.

8.5.3 *Straightening studs*

Timber to be used as a *stud* shall not have a crook exceeding the maximum permitted by NZS 3631. Any crook within that limitation, may be corrected or *studs* straightened by cutting from one edge through to not further than the centre line (see figure 8.6) provided that:

(a) There shall not be more than 2 such cuts in any *stud*;

(b) Fishplates the same width as the *stud*, 19 mm thick, and extending not less than 225 mm past each side of the cut shall be nailed to both faces of the *stud*; Amd 2 May '06

(c) Not more than one quarter of the *studs* in any run of wall shall be partially cut, and no 2 such cut *studs* shall be adjacent to one another;

(d) No *trimming stud*, whether single or double, shall be partially cut.

Copyright Standards New Zealand

© The Crown in right of New Zealand, administered by the New Zealand Standards Executive. Access to this standard has been sponsored by the Ministry of Business, Innovation, and Employment under copyright license LN001498. You are not permitted to reproduce or distribute any part of this standard without prior written permission from Standards New Zealand, on behalf of New Zealand Standards Executive, unless your actions are covered by Part 3 of the Copyright Act 1994.

© The Crown in right of New Zealand, administered by the New Zealand Standards Executive. Access to this standard has been sponsored by the Ministry of Business, Innovation, and Employment under copyright license LN001498. You are not permitted to reproduce or distribute any part of this standard without prior written permission from Standards New Zealand, on behalf of New Zealand Standards Executive, unless your actions are covered by Part 3 of the Copyright Act 1994.

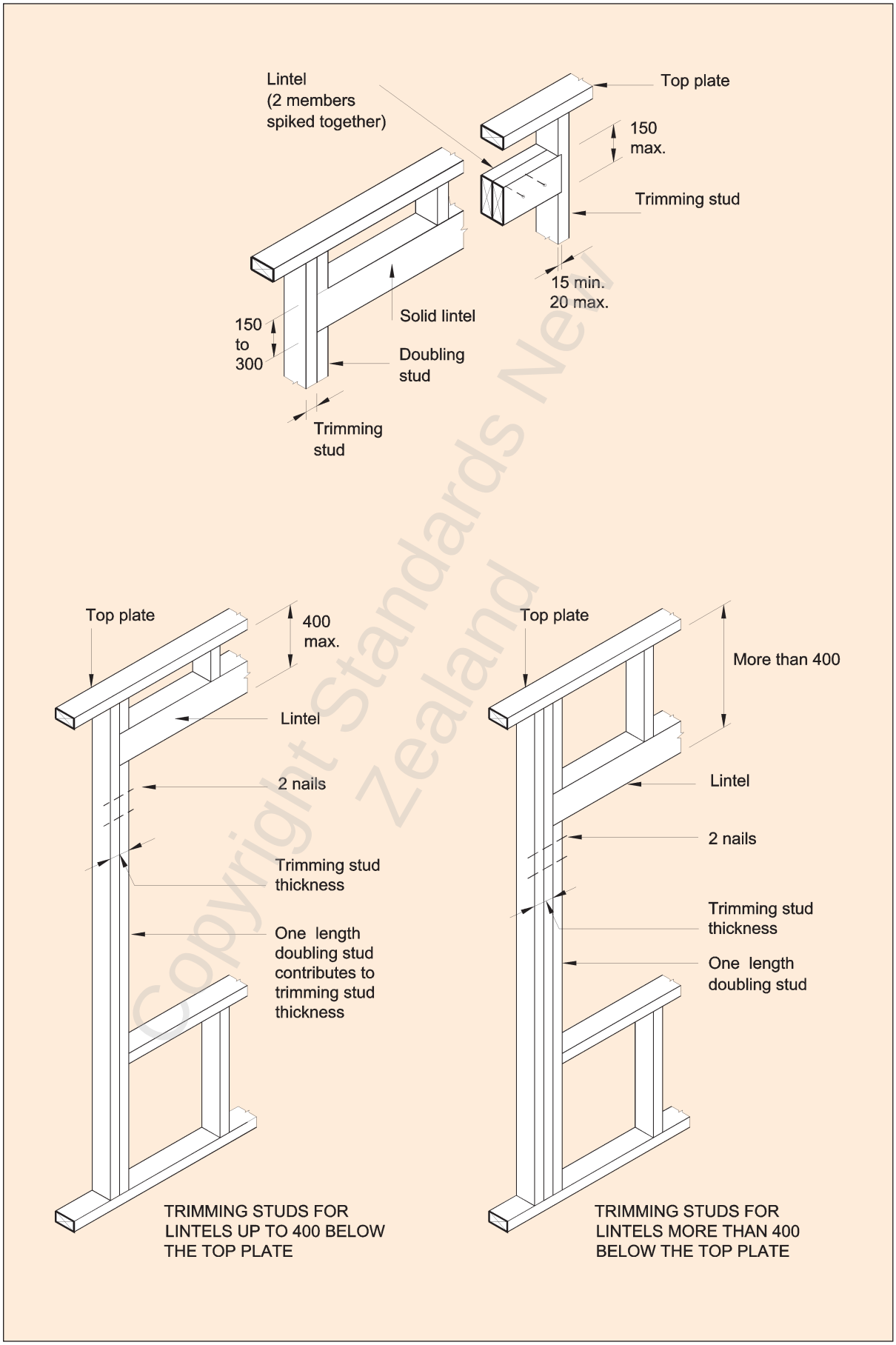

Amd 1
Dec '00

Figure 8.5 – Trimming studs and lintels (see 8.5.2.1)

© The Crown in right of New Zealand, administered by the New Zealand Standards Executive. Access to this standard has been sponsored by the Ministry of Business, Innovation, and Employment under copyright license LN001498. You are not permitted to reproduce or distribute any part of this standard without prior written permission from Standards New Zealand, on behalf of New Zealand Standards Executive, unless your actions are covered by Part 3 of the Copyright Act 1994.

Table 8.5 – Trimming studs (see 8.5.2.1)

1.5 kPa and 2 kPa floor loads

Maximum clear width of opening (span of lintel)	Stud thickness required for 600 mm spaced studs	Thickness of trimming studs
A Single storey, top storey or non-loadbearing walls		
(m)	(mm)	(mm)
1.8	35 45 70 90	45 45 90 115
3.0	35 45 70 90	45 70 90 135
3.6	35 45 70 90	70 90 140 180
4.2	35 45 70 90	105 135 210 270
B Any other location		
0.9	35 45 70 90	45 70 90 135
1.8	35 45 70 90	70 70 115 135
3.0	35 45 70 90	70 90 140 180

Amd 2 May '06

NOTE – To use this table.

(1) Enter the row corresponding to the lintel span being considered.

(2) From the second column, select the thickness of the studs required for the body of the wall, assuming that they are spaced at 600 mm.

(3) Read the trimming stud thickness from the right side column.

Copyright Standards New Zealand

© The Crown in right of New Zealand, administered by the New Zealand Standards Executive. Access to this standard has been sponsored by the Ministry of Business, Innovation, and Employment under copyright license LN001498. You are not permitted to reproduce or distribute any part of this standard without prior written permission from Standards New Zealand, on behalf of New Zealand Standards Executive, unless your actions are covered by Part 3 of the Copyright Act 1994.

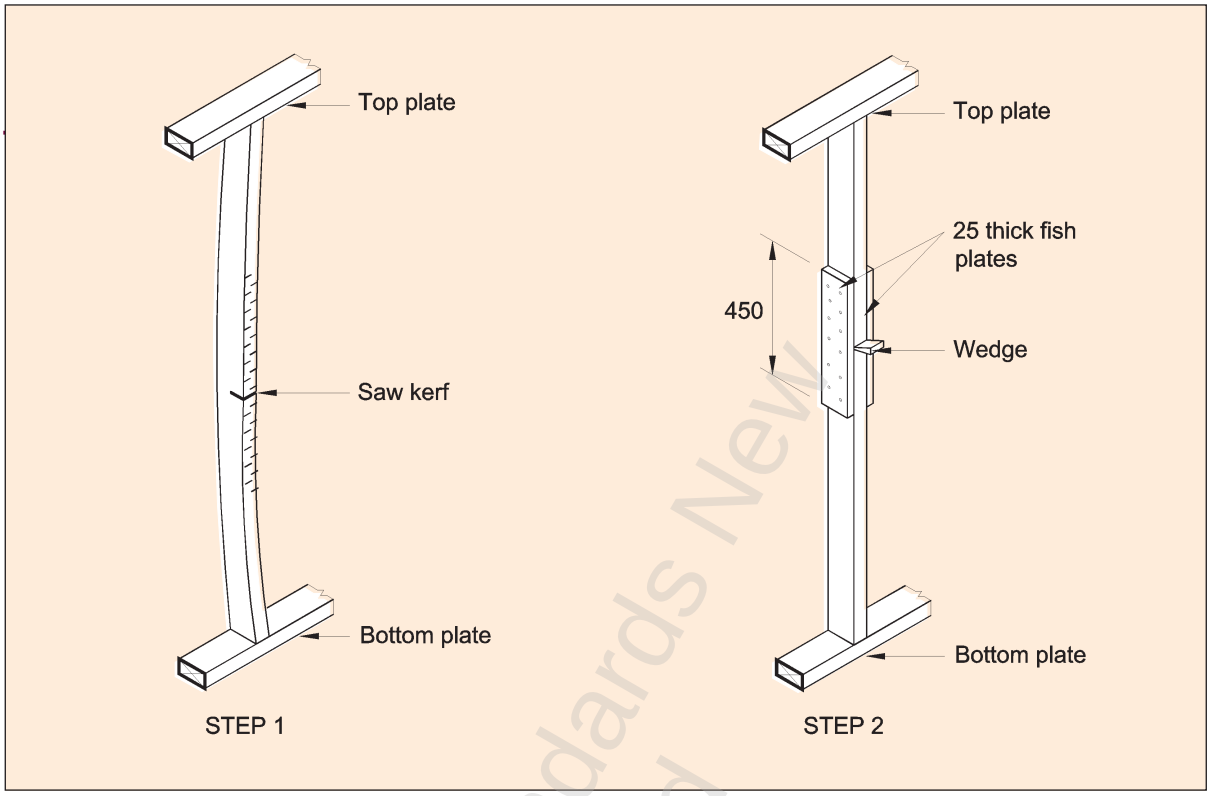

Figure 8.6 – Straightening studs (see 8.5.3)

8.5.4 *Lateral support of studs*

All *studs* shall be laterally supported by either:

(a) Exterior wall *claddings* complying with section 11 or interior *linings* complying with section 12. Such material shall be fixed to the *studs* by direct nailing of *cladding* or *lining* material, provided that building paper or similar material not exceeding 3 mm thick may separate the *lining* or *cladding* material from the *stud*; or

(b) *Dwangs*, *walings*, or *metal angle walings* in accordance with 8.8.

C8.5.4

Masonry veneer ties, clip fixings, and adhesive fixings are not considered connections of adequate rigidity.

8.5.5 *Stud spacing adjustment factor for tall studs of smaller cross section in raking walls*

In walls of varying height, to achieve uniform *stud* depths, the *stud* sizes and *spacings* determined from tables 8.2, 8.3 and 8.4 shall be adjusted in accordance with table 8.6.

C8.5.5 Example

Taking an example of 140 x 45 stud at 600 centres, use table 8.6 to calculate as follows.

From the column headed "Original larger stud size" and the row labelled 140 x 45, move across to the column headed "Desired smaller stud size" and headed "90 x 70". The spacing adjustment factor is 0.38. Hence the maximum spacing of the 90 x 70 stud is 0.38 x 600 = 230 mm.

Alternatively, a 90 x 90 (desired smaller stud size) may be used at 0.53 x 600 = 320 mm spacing.

Copyright Standards New Zealand

© The Crown in right of New Zealand, administered by the New Zealand Standards Executive. Access to this standard has been sponsored by the Ministry of Business, Innovation, and Employment under copyright license LN001498. You are not permitted to reproduce or distribute any part of this standard without prior written permission from Standards New Zealand, on behalf of New Zealand Standards Executive, unless your actions are covered by Part 3 of the Copyright Act 1994.

Table 8.6 – Stud spacing adjustment factor for tall studs of smaller cross section in raking walls (see 8.5.5)

Original larger stud size (mm x mm)	Stud spacing adjustment factor – Desired smaller stud size (mm x mm)		
	90 x 45	**90 x 70**	**90 x 90**
90 x 70	0.69	1.00	–
90 x 90	0.50	0.72	1.00
140 x 35	0.34	0.49	0.68
140 x 45	0.27	0.38	0.53
140 x 70	0.18	0.27	0.37
140 x 90	0.13	0.19	0.27

NOTE – Multiply original larger stud size spacing by this factor to obtain the spacing for the desired smaller stud size.

C8.6.1.2
The size of a lintel, its location and the loads it supports, is determined from table 8.8 and figures 8.7 to 8.11. This will determine which of tables 8.9 to 8.13 to consult. On the relevant table the row containing a loaded dimension greater than the actual loaded dimension is entered, to find a column containing a lintel span greater than the actual lintel span. The minimum lintel size is given at the head of that table column.

C8.6.1.3
Steep pitch trusses subject lintels to large overturning forces when resisting wind loads.

C8.6.1.4
Where concentrated loads occur on a lintel (such as from an upper storey trimming stud supporting a lintel of greater than 1.2 m span, or from a girder truss) then the lintel size must be specifically designed.

It is recommended during construction that all lintels be propped at mid-span, until they dry to their final equilibrium moisture content. This will control any unwanted deflection of green timber as it dries.

8.6 Lintels and sill and head trimmers

8.6.1 *Lintels*

8.6.1.1
Lintels shall be provided over all openings in *loadbearing walls* (see figures 8.7 to 8.11).

8.6.1.2
Lintels shall be of the dimensions given by tables 8.9 to 8.13. These tables cover only evenly distributed uniform loads at maximum 1200 mm centres, from wall *framing*, joists, rafters and trusses. (See tables 14.12 to 14.14 for 3 kPa *floor load,* tables 15.1 to 15.5 for snow loads, table 16.1 for plywood box beam *lintels* and table 16.2 for glue laminated timber *lintels*).

8.6.1.3
Tables for *lintels* have been designed to support roofs with a maximum pitch of 45°. For roofs of steeper pitches up to 60°, the *loaded dimension* shall be multiplied by the following factors, before using the tables to obtain *lintel* sizes (see table 8.7).

8.6.1.4
For the various load cases for *lintels* see table 8.8.

Table 8.7 – Span multipliers for roofs steeper than 45° (see 8.6.1.3)

Roof pitch (degrees)	Trusses multiplier	Single rafters multiplier
50	1	1.1
55	3	1.2
60	SED	1.4

Amd 1 Dec '00

Copyright Standards New Zealand

Table 8.8 – Reference table for lintel load cases (see 8.6.1.4)

Table	Supporting			Load type			
No.	Roof	Walls	Floor	Roof	Snow	Walls	Floor
					(kPa)		(kPa)
8.9	✓			Light	0		
	✓			Heavy	0		
8.10	✓	✓		Light	0	Light	
	✓	✓		Light	0	Medium	
	✓	✓		Heavy	0	Light	
	✓	✓		Heavy	0	Medium	
8.11	✓	✓	✓	Light	0	Light	1.5 or 2
	✓	✓	✓	Light	0	Medium	1.5 or 2
	✓	✓	✓	Heavy	0	Light	1.5 or 2
	✓	✓	✓	Heavy	0	Medium	1.5 or 2
8.12		✓	✓			Light	1.5 or 2
		✓	✓			Medium	1.5 or 2
8.13			✓				1.5 or 2

NOTE – Refer to tables 15.1 to 15.5 for snow loading cases and tables 14.11 to 14.14 for 3 kPa floor loads.

Copyright Standards New Zealand

© The Crown in right of New Zealand, administered by the New Zealand Standards Executive. Access to this standard has been sponsored by the Ministry of Business, Innovation, and Employment under copyright license LN001498. You are not permitted to reproduce or distribute any part of this standard without prior written permission from Standards New Zealand, on behalf of New Zealand Standards Executive, unless your actions are covered by Part 3 of the Copyright Act 1994.

© The Crown in right of New Zealand, administered by the New Zealand Standards Executive. Access to this standard has been sponsored by the Ministry of Business, Innovation, and Employment under copyright license LN001498. You are not permitted to reproduce or distribute any part of this standard without prior written permission from Standards New Zealand, on behalf of New Zealand Standards Executive, unless your actions are covered by Part 3 of the Copyright Act 1994.

Table 8.9 – Lintels supporting roof only (see figure 8.7) **– No. 1 Framing and MSG 6**

	Loaded dimension* of lintel (m)	Maximum span for lintel sizes listed below (m)									
		Width x thickness (mm)									
		90 x 70	90 x 90	140 x 70	140 x 90	190 x 70	190 x 90	240 x 70	240 x 90	290 x 70	290 x 90
Light roof	3	0.9	1.0	1.5	1.6	2.0	2.2	2.6	2.8	3.1	3.4
	4	0.8	0.9	1.3	1.5	1.8	2.0	2.3	2.6	2.8	3.1
	5	0.8	0.9	1.2	1.4	1.7	1.9	2.1	2.4	2.6	2.9
	6	0.7	0.8	1.1	1.3	1.5	1.8	1.9	2.3	2.3	2.8
Heavy roof	3	0.7	0.8	1.2	1.3	1.6	1.8	2.0	2.3	2.4	2.7
	4	–	0.8	1.0	1.2	1.4	1.6	1.8	2.1	2.2	2.5
	5	–	0.7	0.9	1.1	1.3	1.5	1.6	1.9	2.0	2.4
	6	–	–	0.8	1.0	1.2	1.4	1.5	1.8	1.8	2.2

* Loaded dimension is defined in figure 1.3.

NOTE – Members 70 mm and 90 mm thick may be substituted with built-up members sized and nailed in accordance with 2.4.4.7.

Amd 2
May '06

Copyright Standards New Zealand

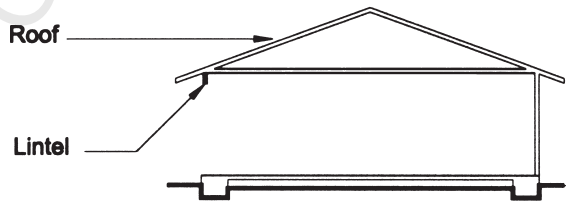

Figure 8.7 – Lintel supporting roof only (see 8.6.1.1 and table 8.9)

Table 8.9 – Lintels supporting roof only (see figure 8.7) **– VSG 8 and MSG 8**

	Loaded dimension* of lintel (m)	Maximum span for lintel sizes listed below (m)									
		Width x thickness (mm)									
		90 x 70	90 x 90	140 x 70	140 x 90	190 x 70	190 x 90	240 x 70	240 x 90	290 x 70	290 x 90
Light roof	3	1.0	1.1	1.6	1.8	2.3	2.5	2.9	3.1	3.5	3.8
	4	1.0	1.0	1.5	1.6	2.1	2.3	2.6	2.9	3.2	3.5
	5	0.9	1.0	1.4	1.5	1.9	2.1	2.5	2.7	3.0	3.2
	6	0.8	0.9	1.3	1.5	1.8	2.0	2.3	2.5	2.8	3.1
Heavy roof	3	0.8	0.9	1.3	1.4	1.8	2.0	2.3	2.5	2.8	3.0
	4	0.8	0.8	1.2	1.3	1.7	1.8	2.1	2.3	2.6	2.8
	5	0.7	0.8	1.1	1.2	1.5	1.7	1.9	2.2	2.3	2.6
	6	–	0.7	1.0	1.2	1.4	1.6	1.8	2.0	2.1	2.5

* Loaded dimension is defined in figure 1.3.

NOTE – Members 70 mm and 90 mm thick may be substituted with built-up members sized and nailed in accordance with 2.4.4.7.

Table 8.9 – Lintels supporting roof only (see figure 8.7) **– VSG 10 and MSG 10**

	Loaded Dimension* of lintel (m)	Maximum span for lintel sizes listed below (m)									
		Width x thickness (mm)									
		90 x 70	90 x 90	140 x 70	140 x 90	190 x 70	190 x 90	240 x 70	240 x 90	290 x 70	290 x 90
Light roof	3	1.1	1.2	1.8	1.9	2.4	2.6	3.1	3.3	3.7	4.0
	4	1.0	1.1	1.6	1.8	2.2	2.4	2.8	3.1	3.4	3.7
	5	1.0	1.1	1.5	1.7	2.1	2.3	2.6	2.9	3.2	3.5
	6	0.9	1.0	1.4	1.6	2.0	2.1	2.5	2.7	3.0	3.3
Heavy roof	3	0.9	1.0	1.4	1.6	2.0	2.1	2.5	2.7	3.0	3.3
	4	0.8	0.9	1.3	1.4	1.8	2.0	2.3	2.5	2.8	3.0
	5	0.8	0.8	1.2	1.3	1.7	1.8	2.1	2.3	2.6	2.8
	6	0.7	0.8	1.2	1.3	1.6	1.7	2.0	2.2	2.4	2.7

* Loaded dimension is defined in figure 1.3.

Amd 2 May '06

NOTE – Members 70 mm and 90 mm thick may be substituted with built-up members sized and nailed in accordance with 2.4.4.7.

Copyright Standards New Zealand

© The Crown in right of New Zealand, administered by the New Zealand Standards Executive. Access to this standard has been sponsored by the Ministry of Business, Innovation, and Employment under copyright license LN001498. You are not permitted to reproduce or distribute any part of this standard without prior written permission from Standards New Zealand, on behalf of New Zealand Standards Executive, unless your actions are covered by Part 3 of the Copyright Act 1994.

Table 8.10 – Lintels supporting roof and wall (see figure 8.8) **– No. 1 Framing and MSG 6**

	Loaded dimension* of lintel (m)	Maximum span for lintel sizes listed below (m)									
		Width x thickness (mm)									
		90 x 70	90 x 90	140 x 70	140 x 90	190 x 70	190 x 90	240 x 70	240 x 90	290 x 70	290 x 90
Light roof Light wall	3	0.8	0.9	1.3	1.4	1.8	2.0	2.3	2.5	2.8	3.0
	4	0.8	0.9	1.2	1.4	1.7	1.8	2.1	2.3	2.6	2.8
	5	0.7	0.8	1.1	1.3	1.5	1.8	2.0	2.2	2.4	2.7
	6	0.7	0.8	1.0	1.2	1.4	1.7	1.8	2.1	2.2	2.6
Light roof Medium wall	3	0.7	0.8	1.2	1.3	1.6	1.8	2.0	2.3	2.5	2.8
	4	0.7	0.8	1.1	1.3	1.5	1.7	1.9	2.2	2.3	2.6
	5	–	–	0.8	1.0	1.1	1.4	1.4	1.7	1.7	2.1
	6	–	–	0.8	0.9	1.0	1.3	1.3	1.6	1.6	2.0
Heavy roof Light wall	3	0.7	0.8	1.0	1.2	1.4	1.7	1.8	2.1	2.2	2.6
	4	–	0.7	0.9	1.1	1.3	1.6	1.6	2.0	2.0	2.4
	5	–	0.7	0.9	1.0	1.2	1.4	1.5	1.8	1.8	2.2
	6	–	–	0.8	1.0	1.1	1.3	1.4	1.7	1.7	2.1
Heavy roof Medium wall	3	–	0.7	1.0	1.1	1.3	1.6	1.7	2.0	2.0	2.4
	4	–	0.7	0.9	1.1	1.2	1.5	1.5	1.9	1.9	2.3
	5	–	–	0.8	1.0	1.1	1.4	1.4	1.7	1.7	2.1
	6	–	–	0.8	0.9	1.0	1.3	1.3	1.6	1.6	2.0

* For definition of loaded dimension see 1.3.

NOTE –

(1) Determine the loaded dimension of the wall above the lintel at roof level and use this value in the table.

(2) Members 70 mm and 90 mm thick may be substituted with built-up members sized and nailed in accordance with 2.4.4.7.

Amd 2 May '06

Amd 1 Dec '00

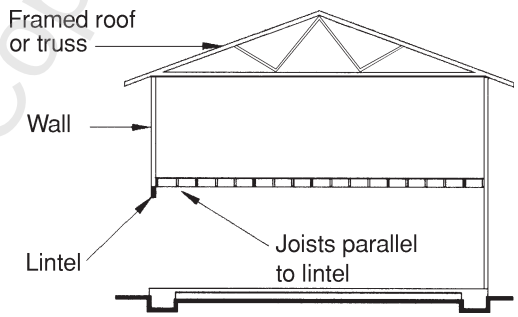

Figure 8.8 – Lintel supporting roof and wall (see 8.6.1.1 and table 8.10)

© The Crown in right of New Zealand, administered by the New Zealand Standards Executive. Access to this standard has been sponsored by the Ministry of Business, Innovation, and Employment under copyright license LN001498. You are not permitted to reproduce or distribute any part of this standard without prior written permission from Standards New Zealand, on behalf of New Zealand Standards Executive, unless your actions are covered by Part 3 of the Copyright Act 1994.

Copyright Standards New Zealand

Table 8.10 – Lintels supporting roof and wall (see figure 8.8) **– VSG 8 and MSG 8**

	Loaded dimension* of lintel (m)	Maximum span for lintel sizes listed below (m)									
		Width x thickness (mm)									
		90 x 70	90 x 90	140 x 70	140 x 90	190 x 70	190 x 90	240 x 70	240 x 90	290 x 70	290 x 90
Light roof Light wall	3	0.9	1.0	1.5	1.6	2.0	2.2	2.5	2.8	3.1	3.3
	4	0.9	0.9	1.4	1.5	1.9	2.0	2.4	2.6	2.9	3.1
	5	0.8	0.9	1.3	1.4	1.8	1.9	2.3	2.5	2.7	3.0
	6	0.8	0.9	1.2	1.4	1.7	1.9	2.2	2.4	2.6	2.9
Light roof Medium wall	3	0.8	0.9	1.3	1.5	1.8	2.0	2.3	2.5	2.8	3.1
	4	0.8	0.9	1.3	1.4	1.7	1.9	2.2	2.4	2.7	2.9
	5	–	0.7	1.0	1.1	1.3	1.6	1.7	2.0	2.0	2.4
	6	–	0.7	0.9	1.1	1.2	1.5	1.6	1.9	1.9	2.3
Heavy roof Light wall	3	0.8	0.8	1.2	1.3	1.7	1.8	2.1	2.3	2.6	2.8
	4	0.7	0.8	1.1	1.3	1.5	1.7	1.9	2.2	2.4	2.6
	5	–	0.7	1.0	1.2	1.4	1.6	1.8	2.1	2.2	2.5
	6	–	0.7	0.9	1.1	1.3	1.5	1.7	2.0	2.0	2.4
Heavy roof Medium wall	3	0.7	0.8	1.1	1.3	1.6	1.7	2.0	2.2	2.4	2.7
	4	0.7	0.8	1.0	1.2	1.4	1.6	1.8	2.1	2.2	2.5
	5	–	0.7	1.0	1.1	1.3	1.6	1.7	2.0	2.0	2.4
	6	–	0.7	0.9	1.1	1.2	1.5	1.6	1.9	1.9	2.3

* For definition of loaded dimension see 1.3.

NOTE –

(1) Determine the loaded dimension of the wall above the lintel at roof level and use this value in the table.

(2) Members 70 mm and 90 mm thick may be substituted with built-up members sized and nailed in accordance with 2.4.4.7.

Table 8.10 – Lintels supporting roof and wall (see figure 8.8) **– VSG 10 and MSG 10**

	Loaded dimension* of lintel (m)	Maximum span for lintel sizes listed below (m)									
		Width x thickness (mm)									
		90 x 70	90 x 90	140 x 70	140 x 90	190 x 70	190 x 90	240 x 70	240 x 90	290 x 70	290 x 90
Light roof Light wall	3	1.0	1.1	1.6	1.7	2.1	2.3	2.7	3.0	3.3	3.6
	4	0.9	1.0	1.5	1.6	2.0	2.2	2.6	2.8	3.1	3.4
	5	0.9	1.0	1.4	1.5	1.9	2.1	2.4	2.7	3.0	3.2
	6	0.8	0.9	1.3	1.5	1.8	2.0	2.3	2.5	2.8	3.1
Light roof Medium wall	3	0.9	1.0	1.4	1.6	2.0	2.1	2.5	2.7	3.0	3.3
	4	0.9	0.9	1.4	1.5	1.9	2.0	2.4	2.6	2.9	3.1
	5	0.7	0.8	1.1	1.2	1.5	1.7	2.0	2.1	2.4	2.6
	6	0.7	0.7	1.1	1.2	1.5	1.6	1.9	2.0	2.3	2.5
Heavy roof Light wall	3	0.8	0.9	1.3	1.5	1.8	2.0	2.3	2.5	2.8	3.1
	4	0.8	0.9	1.2	1.4	1.7	1.9	2.2	2.3	2.6	2.8
	5	0.7	0.8	1.2	1.3	1.6	1.7	2.0	2.2	2.5	2.7
	6	0.7	0.8	1.1	1.2	1.5	1.7	1.9	2.1	2.4	2.6
Heavy roof Medium wall	3	0.8	0.9	1.3	1.4	1.7	1.9	2.2	2.4	2.6	2.9
	4	0.7	0.8	1.2	1.3	1.6	1.8	2.1	2.2	2.5	2.7
	5	0.7	0.8	1.1	1.2	1.5	1.7	2.0	2.1	2.4	2.6
	6	0.7	0.7	1.1	1.2	1.5	1.6	1.9	2.0	2.3	2.5

* For definition of loaded dimension see 1.3.

NOTE –

(1) Determine the loaded dimension of the wall above the lintel at roof level and use this value in the table.

(2) Members 70 mm and 90 mm thick may be substituted with built-up members sized and nailed in accordance with 2.4.4.7.

Amd 2
May '06

© The Crown in right of New Zealand, administered by the New Zealand Standards Executive. Access to this standard has been sponsored by the Ministry of Business, Innovation, and Employment under copyright license LN001498. You are not permitted to reproduce or distribute any part of this standard without prior written permission from Standards New Zealand, on behalf of New Zealand Standards Executive, unless your actions are covered by Part 3 of the Copyright Act 1994.

Copyright Standards New Zealand

Table 8.11 – Lintels supporting roof, wall and floor (see figure 8.9) **– No. 1 Framing and MSG 6**

1.5 kPa or 2 kPa floor loads

	Loaded dimension* of lintel (m)	Maximum span for lintel sizes listed below (m)							
		Width x thickness (mm)							
		140 x 70	140 x 90	190 x 70	190 x 90	240 x 70	240 x 90	290 x 70	290 x 90
Light roof Light wall	3	0.8	1.0	1.1	1.3	1.4	1.7	1.7	2.0
	4	0.8	0.9	1.0	1.3	1.3	1.6	1.6	2.0
	5	0.7	0.9	1.0	1.2	1.3	1.6	1.6	1.9
	6	0.7	0.9	1.0	1.2	1.2	1.5	1.5	1.8
Light roof Medium wall	3	0.8	0.9	1.0	1.3	1.3	1.6	1.6	2.0
	4	0.7	0.9	1.0	1.2	1.3	1.6	1.6	1.9
	5	–	0.8	0.9	1.1	1.1	1.4	1.4	1.7
	6	–	0.8	0.9	1.0	1.1	1.3	1.3	1.6
Heavy roof Light wall	3	0.7	0.9	1.0	1.2	1.3	1.6	1.6	1.9
	4	0.7	0.8	1.0	1.2	1.2	1.5	1.5	1.8
	5	0.7	0.8	0.9	1.1	1.2	1.4	1.4	1.7
	6	–	0.8	0.9	1.1	1.1	1.4	1.4	1.7
Heavy roof Medium wall	3	0.7	0.9	1.0	1.2	1.2	1.5	1.5	1.8
	4	0.7	0.8	0.9	1.1	1.2	1.4	1.4	1.8
	5	–	0.8	0.9	1.1	1.1	1.4	1.4	1.7
	6	–	0.8	0.9	1.0	1.1	1.3	1.3	1.6

* For definition of loaded dimension see 1.3.

NOTE –

(1) Determine the loaded dimension of the lintel at floor level and the loaded dimension of the wall above the lintel at roof level and use the greater value in this table.

(2) Members 70 mm and 90 mm thick may be substituted with built-up members sized and nailed in accordance with 2.4.4.7.

Amd 2 May '06

Amd 1 Dec '00

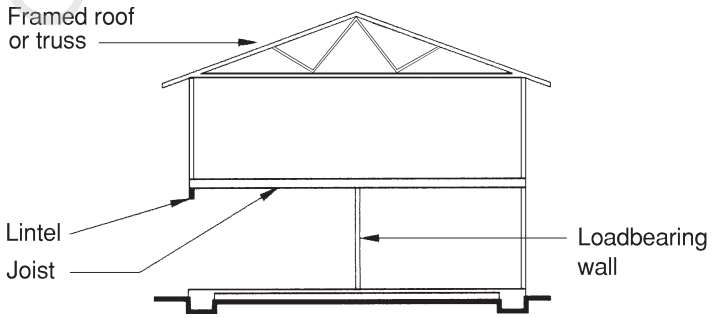

Figure 8.9 – Lintel supporting roof, floor joists and walls (see 8.6.1.1 and table 8.11)

© The Crown in right of New Zealand, administered by the New Zealand Standards Executive. Access to this standard has been sponsored by the Ministry of Business, Innovation, and Employment under copyright license LN001498. You are not permitted to reproduce or distribute any part of this standard without prior written permission from Standards New Zealand, on behalf of New Zealand Standards Executive, unless your actions are covered by Part 3 of the Copyright Act 1994.

Copyright Standards New Zealand

© The Crown in right of New Zealand, administered by the New Zealand Standards Executive. Access to this standard has been sponsored by the Ministry of Business, Innovation, and Employment under copyright license LN001498. You are not permitted to reproduce or distribute any part of this standard without prior written permission from Standards New Zealand, on behalf of New Zealand Standards Executive, unless your actions are covered by Part 3 of the Copyright Act 1994.

Table 8.11 – Lintels supporting roof, wall and floor (see figure 8.9) **– VSG 8 and MSG 8**

1.5 kPa or 2 kPa floor loads

	Loaded dimension* of lintel (m)	Maximum span for lintel sizes listed below (m)							
		Width x thickness (mm)							
		140 x 70	140 x 90	190 x 70	190 x 90	240 x 70	240 x 90	290 x 70	290 x 90
Light roof Light wall	3	0.9	1.1	1.3	1.6	1.6	2.0	2.0	2.4
	4	0.9	1.1	1.2	1.5	1.6	1.9	1.9	2.3
	5	0.9	1.1	1.2	1.5	1.5	1.9	1.8	2.2
	6	0.8	1.0	1.2	1.4	1.5	1.8	1.8	2.2
Light roof Medium wall	3	0.9	1.1	1.2	1.5	1.6	1.9	1.9	2.3
	4	0.9	1.1	1.2	1.5	1.5	1.9	1.9	2.3
	5	0.8	0.9	1.1	1.3	1.4	1.6	1.6	2.0
	6	0.7	0.9	1.0	1.2	1.3	1.6	1.6	1.9
Heavy roof Light wall	3	0.9	1.1	1.2	1.5	1.5	1.9	1.9	2.3
	4	0.8	1.0	1.1	1.4	1.5	1.8	1.8	2.1
	5	0.8	1.0	1.1	1.3	1.4	1.7	1.7	2.1
	6	0.8	0.9	1.0	1.3	1.3	1.6	1.6	2.0
Heavy roof Medium wall	3	0.8	1.0	1.2	1.4	1.5	1.8	1.8	2.2
	4	0.8	1.0	1.1	1.4	1.4	1.7	1.7	2.1
	5	0.8	0.9	1.1	1.3	1.4	1.6	1.6	2.0
	6	0.7	0.9	1.0	1.2	1.3	1.6	1.6	1.9

* For definition of loaded dimension see 1.3.

NOTE –

(1) Determine the loaded dimension of the lintel at floor level and the loaded dimension of the wall above the lintel at roof level and use the greater value in this table.

Amd 2 May '06 (2) Members 70 mm and 90 mm thick may be substituted with built-up members sized and nailed in accordance with 2.4.4.7.

Amd 1 Dec '00

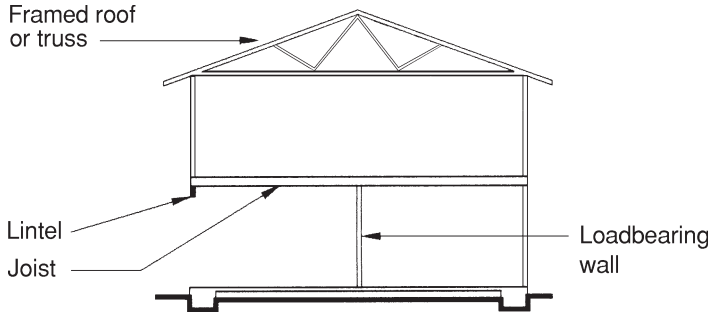

Figure 8.9 – Lintel supporting roof, floor joists and walls (see 8.6.1.1 and table 8.11)

Copyright Standards New Zealand

© The Crown in right of New Zealand, administered by the New Zealand Standards Executive. Access to this standard has been sponsored by the Ministry of Business, Innovation, and Employment under copyright license LN001498. You are not permitted to reproduce or distribute any part of this standard without prior written permission from Standards New Zealand, on behalf of New Zealand Standards Executive, unless your actions are covered by Part 3 of the Copyright Act 1994.

Table 8.11 – Lintels supporting roof, wall and floor (see figure 8.9) **– VSG 10 and MSG 10**

1.5 kPa or 2 kPa floor loads

	Loaded dimension* of lintel (m)	Maximum span for lintel sizes listed below (m)							
		Width x thickness (mm)							
		140 x 70	140 x 90	190 x 70	190 x 90	240 x 70	240 x 90	290 x 70	290 x 90
Light roof Light wall	3	1.1	1.3	1.5	1.8	2.0	2.3	2.4	2.8
	4	1.1	1.3	1.5	1.8	1.9	2.2	2.3	2.7
	5	1.0	1.3	1.4	1.7	1.8	2.2	2.2	2.6
	6	1.0	1.2	1.4	1.7	1.8	2.1	2.1	2.6
Light roof Medium wall	3	1.1	1.3	1.5	1.7	1.9	2.2	2.3	2.7
	4	1.1	1.2	1.4	1.7	1.8	2.1	2.2	2.6
	5	0.9	1.1	1.3	1.5	1.6	1.9	1.9	2.3
	6	0.9	1.1	1.2	1.4	1.6	1.8	1.8	2.2
Heavy roof Light wall	3	1.1	1.2	1.4	1.7	1.8	2.1	2.2	2.6
	4	1.0	1.2	1.4	1.6	1.7	2.0	2.1	2.5
	5	1.0	1.1	1.3	1.5	1.7	1.9	2.0	2.4
	6	0.9	1.1	1.3	1.5	1.6	1.9	1.9	2.3
Heavy roof Medium wall	3	1.0	1.2	1.4	1.6	1.8	2.0	2.2	2.5
	4	1.0	1.1	1.3	1.5	1.7	2.0	2.1	2.4
	5	0.9	1.1	1.3	1.5	1.6	1.9	1.9	2.3
	6	0.9	1.1	1.2	1.4	1.6	1.8	1.8	2.2

* For definition of loaded dimension see 1.3.

NOTE –

(1) Determine the loaded dimension of the lintel at floor level and the loaded dimension of the wall above the lintel at roof level and use the greater value in this table.

(2) Members 70 mm and 90 mm thick may be substituted with built-up members sized and nailed in accordance with 2.4.4.7.

Amd 2 May '06

Amd 1 Dec '00

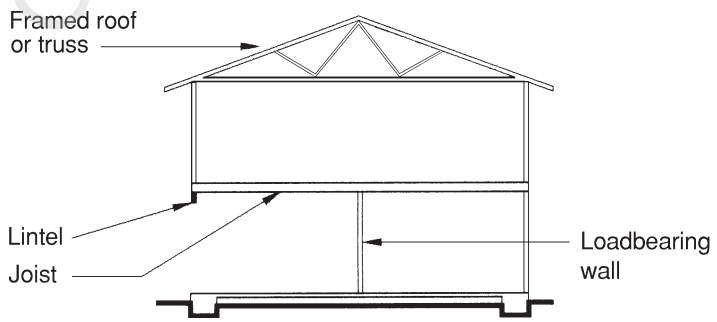

Figure 8.9 – Lintel supporting roof, floor joists and walls (see 8.6.1.1 and table 8.11)

Copyright Standards New Zealand

NOTES

© The Crown in right of New Zealand, administered by the New Zealand Standards Executive. Access to this standard has been sponsored by the Ministry of Business, Innovation, and Employment under copyright license LN001498. You are not permitted to reproduce or distribute any part of this standard without prior written permission from Standards New Zealand, on behalf of New Zealand Standards Executive, unless your actions are covered by Part 3 of the Copyright Act 1994.

Copyright Standards New Zealand

© The Crown in right of New Zealand, administered by the New Zealand Standards Executive. Access to this standard has been sponsored by the Ministry of Business, Innovation, and Employment under copyright license LN001498. You are not permitted to reproduce or distribute any part of this standard without prior written permission from Standards New Zealand, on behalf of New Zealand Standards Executive, unless your actions are covered by Part 3 of the Copyright Act 1994.

Table 8.12 – Lintels supporting wall and floor (see figure 8.10) **– No. 1 Framing and MSG 6**

1.5 kPa or 2 kPa floor loads

	Loaded dimension* of lintel (m)	Maximum span for lintel sizes listed below (m)							
		Width x thickness (mm)							
		140 x 70	140 x 90	190 x 70	190 x 90	240 x 70	240 x 90	290 x 70	290 x 90
Light wall	3	0.9	1.1	1.3	1.6	1.6	2.0	2.0	2.4
Medium wall	3	0.9	1.1	1.2	1.5	1.6	1.9	1.9	2.3

* For definition of loaded dimension see 1.3.

NOTE – Members 70 mm and 90 mm thick may be substituted with built-up members sized and nailed in accordance with 2.4.4.7.

Amd 2
May '06

Copyright Standards New Zealand

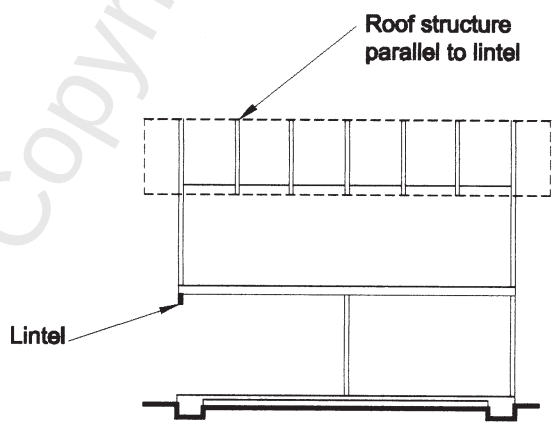

Figure 8.10 – Lintel supporting wall and floor (truss parallel to lintel) (see 8.6.1.1 and table 8.12)

© The Crown in right of New Zealand, administered by the New Zealand Standards Executive. Access to this standard has been sponsored by the Ministry of Business, Innovation, and Employment under copyright license LN001498. You are not permitted to reproduce or distribute any part of this standard without prior written permission from Standards New Zealand, on behalf of New Zealand Standards Executive, unless your actions are covered by Part 3 of the Copyright Act 1994.

Table 8.12 – Lintels supporting wall and floor (see figure 8.10) **– VSG 8 and MSG 8**

1.5 kPa or 2 kPa floor loads

	Loaded dimension* of lintel (m)	Maximum span for lintel sizes listed below (m)							
		Width x thickness (mm)							
		140 x 70	140 x 90	190 x 70	190 x 90	240 x 70	240 x 90	290 x 70	290 x 90
Light wall	3	1.1	1.4	1.5	1.9	1.9	2.4	2.4	2.9
Medium wall	3	1.1	1.3	1.5	1.8	1.9	2.3	2.3	2.7

* For definition of loaded dimension see 1.3.

NOTE – Members 70 mm and 90 mm thick may be substituted with built-up members sized and nailed in accordance with 2.4.4.7.

Table 8.12 – Lintels supporting wall and floor (see figure 8.10) **– VSG 10 and MSG 10**

1.5 kPa or 2 kPa floor loads

	Loaded dimension* of lintel (m)	Maximum span for lintel sizes listed below (m)							
		Width x thickness (mm)							
		140 x 70	140 x 90	190 x 70	190 x 90	240 x 70	240 x 90	290 x 70	290 x 90
Light wall	3	1.3	1.5	1.8	2.1	2.3	2.6	2.8	3.2
Medium wall	3	1.3	1.4	1.8	2.0	2.2	2.5	2.7	3.0

* For definition of loaded dimension see 1.3.

Amd 2 May '06

NOTE – Members 70 mm and 90 mm thick may be substituted with built-up members sized and nailed in accordance with 2.4.4.7.

Copyright Standards New Zealand

© The Crown in right of New Zealand, administered by the New Zealand Standards Executive. Access to this standard has been sponsored by the Ministry of Business, Innovation, and Employment under copyright license LN001498. You are not permitted to reproduce or distribute any part of this standard without prior written permission from Standards New Zealand, on behalf of New Zealand Standards Executive, unless your actions are covered by Part 3 of the Copyright Act 1994.

Table 8.13 – Lintels supporting floor only (see figure 8.11) **– No. 1 Framing and MSG 6**

1.5 kPa or 2 kPa floor loads

Loaded dimension* of lintel (m)	Maximum span for lintel sizes listed below (m)							
	Width x thickness (mm)							
	140 x 70	140 x 90	190 x 70	190 x 90	240 x 70	240 x 90	290 x 70	290 x 90
3	1.0	1.2	1.4	1.6	1.7	2.1	2.1	2.5
4.5	0.8	1.0	1.1	1.3	1.4	1.7	1.7	2.1
6	0.7	0.8	0.9	1.2	1.2	1.5	1.5	1.8

* For definition of loaded dimension see 1.3.

NOTE – Members 70 mm and 90 mm thick may be substituted with built-up members sized and nailed in accordance with 2.4.4.7.

Amd 2
May '06

Copyright Standards New Zealand

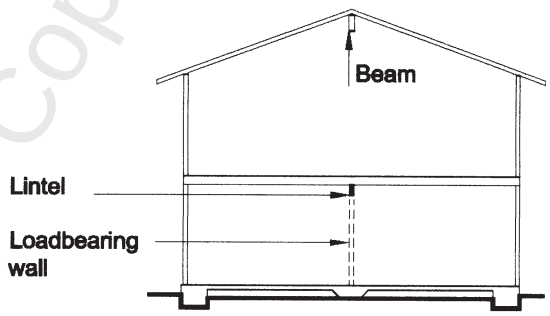

Figure 8.11 – Lintel supporting floor only (see 8.6.1.1 and table 8.13)

Table 8.13 – Lintels supporting floor only (see figure 8.11) **– VSG 8 and MSG 8**

1.5 kPa or 2 kPa floor loads

Loaded dimension* of lintel (m)	Maximum span for lintel sizes listed below (m)							
	Width x thickness (mm)							
	140 x 70	140 x 90	190 x 70	190 x 90	240 x 70	240 x 90	290 x 70	290 x 90
3	1.2	1.4	1.6	2.0	2.0	2.5	2.5	3.0
4.5	0.9	1.2	1.3	1.6	1.7	2.0	2.0	2.4
6	0.8	1.0	1.1	1.4	1.4	1.7	1.7	2.1

* For definition of loaded dimension see 1.3.

NOTE – Members 70 mm and 90 mm thick may be substituted with built-up members sized and nailed in accordance with 2.4.4.7.

Table 8.13 – Lintels supporting floor only (see figure 8.11) **– VSG 10 and MSG 10**

1.5 kPa or 2 kPa floor loads

Loaded dimension* of lintel (m)	Maximum span for lintel sizes listed below (m)							
	Width x thickness (mm)							
	140 x 70	140 x 90	190 x 70	190 x 90	240 x 70	240 x 90	290 x 70	290 x 90
3	1.4	1.7	1.9	2.3	2.5	2.9	3.0	3.5
4.5	1.1	1.4	1.6	1.9	2.0	2.4	2.4	2.9
6	1.0	1.2	1.4	1.6	1.7	2.1	2.1	2.5

* For definition of loaded dimension see 1.3.

Amd 2 May '06

NOTE – Members 70 mm and 90 mm thick may be substituted with built-up members sized and nailed in accordance with 2.4.4.7.

Copyright Standards New Zealand

© The Crown in right of New Zealand, administered by the New Zealand Standards Executive. Access to this standard has been sponsored by the Ministry of Business, Innovation, and Employment under copyright license LN001498. You are not permitted to reproduce or distribute any part of this standard without prior written permission from Standards New Zealand, on behalf of New Zealand Standards Executive, unless your actions are covered by Part 3 of the Copyright Act 1994.

© The Crown in right of New Zealand, administered by the New Zealand Standards Executive. Access to this standard has been sponsored by the Ministry of Business, Innovation, and Employment under copyright license LN001498. You are not permitted to reproduce or distribute any part of this standard without prior written permission from Standards New Zealand, on behalf of New Zealand Standards Executive, unless your actions are covered by Part 3 of the Copyright Act 1994.

8.6.1.5
The thickness of a *lintel* may be made up of 2 or more members, but each member must be the length of the *lintel*.

8.6.1.6
Lintels shown in figures 8.7 to 8.11 shall be supported at each end for the full thickness of the *lintel* by:

(a) For *lintels* not exceeding 140 mm wide: The *trimming stud* checked not less than 15 mm nor more than 20 mm; | Amd 2 May '06

(b) For *lintels* not exceeding 240 mm wide: A 35 mm thick doubling *stud* or *jack stud*; | Amd 2 May '06

(c) For *lintels* not exceeding 290 mm wide: A 45 mm thick doubling *stud* or *jack stud*. | Amd 2 May '06

8.6.1.7
Lintels supporting *rafters* or trusses of *roofs* shall be secured against uplift where indicated in table 8.14. Where fixing to resist uplift is not required, the fixings in table 8.19 for "*Lintel* to *trimming stud*" shall be used.

8.6.1.8
Each *lintel* required by table 8.14 to be secured against uplift shall be fixed at each end to a *trimming stud* which in turn shall be fixed to the floor *framing*. Each fixing to be as shown in figure 8.12, or an alternative fixing of 7.5 kN *capacity* in tension along the line of the *trimming stud*.

8.6.1.9
See section 16 for plywood box beam and glue laminated *lintels* supporting uniformly distributed roof loads.

8.6.2 *Sill and head trimmers*

8.6.2.1
Sill trimmers to openings shall be of the same width as the *studs* and of the thickness given by table 8.15.

8.6.2.2
Where a head *trimmer* to an opening is provided it shall be of the same width as the *studs* and of the thickness given by table 8.15.

Copyright Standards New Zealand

© The Crown in right of New Zealand, administered by the New Zealand Standards Executive. Access to this standard has been sponsored by the Ministry of Business, Innovation, and Employment under copyright license LN001498. You are not permitted to reproduce or distribute any part of this standard without prior written permission from Standards New Zealand, on behalf of New Zealand Standards Executive, unless your actions are covered by Part 3 of the Copyright Act 1994.

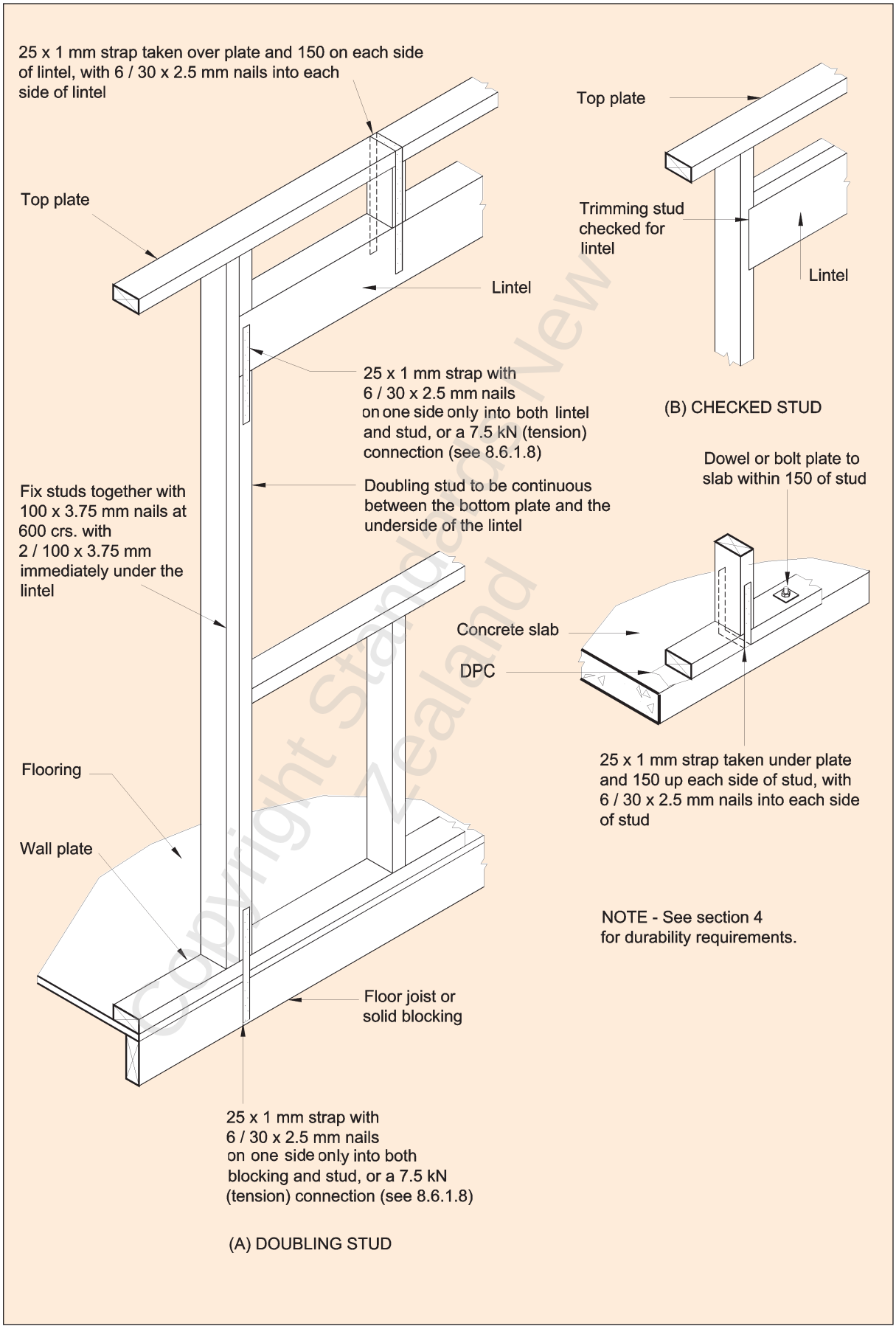

Figure 8.12 – Fixing of lintels to prevent uplift (see 8.6.1.8 and tables 8.14(A) and (B))

© The Crown in right of New Zealand, administered by the New Zealand Standards Executive. Access to this standard has been sponsored by the Ministry of Business, Innovation, and Employment under copyright license LN001498. You are not permitted to reproduce or distribute any part of this standard without prior written permission from Standards New Zealand, on behalf of New Zealand Standards Executive, unless your actions are covered by Part 3 of the Copyright Act 1994.

Amd 1
Dec '00

Table 8.14 – Lintel fixing (see 8.6.1.8)

Wind zone	Loaded dimension of lintel (m)	Uplift fixings not required Use fixings from table 8.19	Uplift fixings required See 8.6.1.8 for fixings
		Maximum lintel span for fixings above (m)	
A Light roof			
Low	3	2.7	4.1
	4	2.3	3.6
	5	1.8	3.6
	6	1.7	3.4
Medium	3	1.3	4.1
	4	1.2	3.6
	5	1.2	3.6
	6	1.1	3.4
High and Very High	3	NA	3.7
	4	NA	3.2
	5	NA	2.7
	6	NA	2.2
B Heavy roof			
Low	3	3.4	*
	4	3.1	*
	5	2.9	*
	6	2.8	*
Medium	3	3.4	*
	4	3.1	*
	5	2.9	*
	6	2.8	*
High	3	2.2	3.4
	4	1.9	3.1
	5	1.4	2.9
	6	1.2	2.8
Very High	3	1.1	3.4
	4	1.0	3.1
	5	NA	2.9
	6	NA	2.8

NA Not applicable.
* Table 8.19 fixings are satisfactory.

NOTE – Fixings for lintel spans greater than those shown require specific engineering design.

Copyright Standards New Zealand

© The Crown in right of New Zealand, administered by the New Zealand Standards Executive. Access to this standard has been sponsored by the Ministry of Business, Innovation, and Employment under copyright license LN001498. You are not permitted to reproduce or distribute any part of this standard without prior written permission from Standards New Zealand, on behalf of New Zealand Standards Executive, unless your actions are covered by Part 3 of the Copyright Act 1994.

8.7 Plates

8.7.1 *Top plates*

8.7.1.1
Top plates of *loadbearing walls* shall be of the dimensions given by table 8.16 except:

(a) As provided by 8.7.1.2; or

(b) Where substituted by a *lintel*; or

(c) Where trusses land more than 150 mm away from a *stud* position, refer to figure 8.13 for plate support; or

(d) Where low density ceilings are installed and the *bracing lines* are *spaced* between 5.0 m and 6.0 m provide an additional plate, refer to 8.7.4.2.

8.7.1.2
Table 8.16 does not apply where a roof or floor *framing* member supported by a *loadbearing wall* lands on the *top plate,* directly over a *stud*. The *top plate* shall in that case be the same width as the *studs* and 35 mm thick.

Amd 2 May '06

8.7.1.3
Top plates of *non-loadbearing walls* shall be the same width as the *studs* and no less than 35 mm thick.

Amd 2 May '06

8.7.1.4
Joints and connections in *top plates* are covered in 8.7.3.

Table 8.15 – Sill and head trimmers (see 8.6.2.1 and 8.6.2.2) **– No. 1 Framing and MSG 6**

Maximum clear width of opening	Minimum thickness of sill and header trimmers
(m)	(mm)
2.0	40
2.4	75
3.0	150

Table 8.15 – Sill and head trimmers (see 8.6.2.1 and 8.6.2.2) **– VSG 8 and MSG 8**

Maximum clear width of opening	Minimum thickness of sill and header trimmers
(m)	(mm)
2.0	40
2.4	50
3.0	100
3.6	150

Amd 2 May '06

Table 8.15 – Sill and head trimmers (see 8.6.2.1 and 8.6.2.2) **– VSG 10 and MSG 10**

Maximum clear width of opening	Minimum thickness of sill and header trimmers
(m)	(mm)
2.0	40
2.4	50
3.0	75
3.6	150

Copyright Standards New Zealand

Table 8.16 – Top plates of loadbearing walls (see 8.7.1.1) **– No. 1 Framing and MSG 6**

1.5 kPa and 2 kPa floor loads

Plate size (mm x mm)		Position of truss or rafter centre line relative to centre line of nearest stud	Maximum spacing of trusses or rafters (mm)	Light roof			Heavy roof		
				Stud spacing (mm)					
				400	480	600	400	480	600
				Maximum loaded dimension* of wall (m)					
A Single or top storey (Applies for any spacing of trusses or rafters)									
70 x 45		Anywhere	600	6.0	4.6	3.3	3.3	2.5	1.7
			900	3.8	2.8	2.0	2.0	1.4	0.9
			1200	2.7	2.0	1.4	–	–	–
		Within 150 mm	600	6.0	5.7	5.0	3.7	3.1	2.7
			900	4.2	3.6	3.2	2.2	1.9	1.6
			1200	3.0	2.6	2.2	–	–	–
90 x 45		Anywhere	600	6.0	6.0	4.4	4.4	3.3	2.4
			900	5.0	3.8	2.7	2.7	2.0	1.4
			1200	3.6	2.7	1.9	–	–	–
		Within 150 mm	600	6.0	6.0	6.0	4.9	4.2	3.7
			900	5.6	4.8	4.2	3.0	2.6	2.3
			1200	4.0	3.5	3.0	–	–	–
90 x 45 plus 140 x 35 or 2/90 x 45	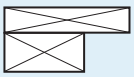 **or**	Anywhere	600	6.0	6.0	6.0	6.0	6.0	5.6
			900	6.0	6.0	6.0	6.0	4.8	3.5
			1200	6.0	6.0	4.6	–	–	–
		Within 150 mm	600	6.0	6.0	6.0	6.0	6.0	6.0
			900	6.0	6.0	6.0	6.0	6.0	5.3
			1200	6.0	6.0	6.0	–	–	–
90 x 45 plus 90 x 45 dwang	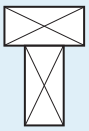	Anywhere	600	6.0	6.0	6.0	6.0	6.0	6.0
			900	6.0	6.0	6.0	6.0	6.0	5.9
			1200	6.0	6.0	6.0	–	–	–
		Within 150 mm	600	6.0	6.0	6.0	6.0	6.0	6.0
			900	6.0	6.0	6.0	6.0	6.0	6.0
			1200	6.0	6.0	6.0	–	–	–

* For definition of loaded dimension see 1.3.

NOTE – Substitution with built-up members is not allowed.

Amd 2 May '06

Copyright Standards New Zealand

© The Crown in right of New Zealand, administered by the New Zealand Standards Executive. Access to this standard has been sponsored by the Ministry of Business, Innovation, and Employment under copyright license LN001498. You are not permitted to reproduce or distribute any part of this standard without prior written permission from Standards New Zealand, on behalf of New Zealand Standards Executive, unless your actions are covered by Part 3 of the Copyright Act 1994.

Table 8.16 – Top plates of loadbearing walls (continued) (see 8.7.1.1) **– No. 1 Framing and MSG 6**

1.5 kPa and 2 kPa floor loads

Plate size (mm x mm)		Maximum loaded dimension of wall supporting floor (m)	Maximum spacing of floor joists (mm)	Light roof			Heavy roof		
				Stud spacing (mm)					
				400	480	600	400	480	600
				Maximum loaded dimension* of wall above supporting roof (m)					
B Lower of 2 storeys and subfloor stud walls supporting 1 storey									
90 x 45		1.5	400	6.0	4.3	1.9	4.5	2.7	–
			450	5.6	3.2	–	3.5	1.9	–
			600	2.8	–	–	1.7	–	–
		3.0	400	2.9	–	–	1.7	–	–
			450	1.5	–	–	–	–	–
90 x 45 plus 140 x 35 or 2/90 x 45	or	1.5	400	6.0	6.0	6.0	6.0	6.0	6.0
			450	6.0	6.0	6.0	6.0	6.0	5.3
			600	6.0	6.0	4.8	6.0	5.2	3.0
		3	400	6.0	6.0	5.8	6.0	6.0	3.7
			450	6.0	6.0	4.1	6.0	5.5	2.5
			600	6.0	4.0	–	4.9	2.4	–
90 x 70		1.5	400	6.0	6.0	6.0	6.0	6.0	6.0
			450	6.0	6.0	6.0	6.0	6.0	6.0
			600	6.0	6.0	6.0	6.0	6.0	4.1
		3	400	6.0	6.0	6.0	6.0	6.0	5.4
			450	6.0	6.0	6.0	6.0	6.0	4.0
			600	6.0	6.0	2.4	6.0	4.0	1.4
C Subfloor stud walls supporting 2 storeys									
90 x 45 plus 140 x 35 or 2/90 x 45	or	1.5	400	6.0	6.0	5.0	6.0	6.0	3.1
			450	6.0	6.0	3.2	6.0	4.9	1.9
			600	6.0	3.1	–	4.3	1.9	–
		3.0	400	6.0	1.7	–	4.6	–	–
			450	4.4	–	–	2.7	–	–
90 x 70		1.5	400	6.0	6.0	6.0	6.0	6.0	4.8
			450	6.0	6.0	5.5	6.0	6.0	3.5
			600	6.0	5.4	1.5	6.0	3.4	–
		3	400	6.0	5.1	–	6.0	3.2	–
			450	6.0	2.5	–	5.3	1.4	–
			600	1.5	–	–	–	–	–

* For definitiion of loaded dimension see 1.3.

NOTE – Substitution with built-up members is not allowed.

Amd 2
May '06

© The Crown in right of New Zealand, administered by the New Zealand Standards Executive. Access to this standard has been sponsored by the Ministry of Business, Innovation, and Employment under copyright license LN001498. You are not permitted to reproduce or distribute any part of this standard without prior written permission from Standards New Zealand, on behalf of New Zealand Standards Executive, unless your actions are covered by Part 3 of the Copyright Act 1994.

Copyright Standards New Zealand

Table 8.16 – Top plates of loadbearing walls (see 8.7.1.1) – VSG 8 and MSG 8

1.5 kPa and 2 kPa floor loads

Plate size (mm x mm)		Position of truss or rafter centre line relative to centre line of nearest stud	Maximum spacing of trusses or rafters (mm)	Light roof			Heavy roof		
				Stud spacing (mm x mm)					
				400	480	600	400	480	600
				Maximum loaded dimension* of wall (mm x mm)					
A Single or top storey (Applies for any spacing of trusses or rafters)									
70 x 45		Anywhere	600	6.0	6.0	4.9	4.8	3.7	2.6
			900	5.5	4.2	3.0	3.0	2.3	1.6
			1200	4.0	3.0	2.1	–	–	–
		Within 150 mm	600	6.0	6.0	6.0	5.4	4.6	4.1
			900	6.0	5.3	4.7	3.4	2.9	2.5
			1200	4.4	3.8	3.3	–	–	–
90 x 45		Anywhere	600	6.0	6.0	6.0	6.0	4.9	3.6
			900	6.0	5.6	4.1	4.1	3.1	2.2
			1200	5.3	4.0	2.9	–	–	–
		Within 150 mm	600	6.0	6.0	6.0	6.0	6.0	5.4
			900	6.0	6.0	6.0	4.5	3.9	3.4
			1200	5.9	5.1	4.5	–	–	–
90 x 45 plus 140 x 35 or 2/90 x 45	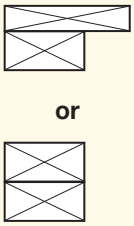	Anywhere	600	6.0	6.0	6.0	6.0	6.0	6.0
			900	6.0	6.0	6.0	6.0	6.0	5.1
			1200	6.0	6.0	6.0	–	–	–
90 x 45 plus 90 x 45 dwang	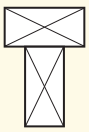	Anywhere	600	6.0	6.0	6.0	6.0	6.0	6.0
			900	6.0	6.0	6.0	6.0	6.0	6.0
			1200	6.0	6.0	6.0	–	–	–

* For definition of loaded dimension see 1.3.

NOTE – Substitution with built-up members is not allowed.

Amd 2 May '06

Copyright Standards New Zealand

© The Crown in right of New Zealand, administered by the New Zealand Standards Executive. Access to this standard has been sponsored by the Ministry of Business, Innovation, and Employment under copyright license LN001498. You are not permitted to reproduce or distribute any part of this standard without prior written permission from Standards New Zealand, on behalf of New Zealand Standards Executive, unless your actions are covered by Part 3 of the Copyright Act 1994.

Table 8.16 – Top plates of loadbearing walls (continued) (see 8.7.1.1) **– VSG 8 and MSG 8**

1.5 kPa and 2 kPa floor loads

Plate size (mm x mm)		Maximum Loaded dimension of wall supporting floor (m)	Maximum spacing of floor joists (mm)	Light roof			Heavy roof		
				Stud spacing (mm)					
				400	480	600	400	480	600
				Maximum loaded dimension* of wall above supporting roof (m)					
B Lower of 2 storeys and subfloor stud walls supporting 1 storey									
90 x 45		1.5	400	6.0	6.0	4.9	6.0	5.3	3.0
			450	6.0	6.0	3.7	6.0	4.3	2.3
			600	6.0	3.7	1.4	3.9	2.2	–
		3.0	400	6.0	4.2	–	5.1	2.5	–
			450	6.0	2.6	–	3.7	1.5	–
			600	2.0	–	–	–	–	–
90 x 45 plus 140 x 35 or 2/90 x 45	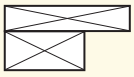 or	1.5	400	6.0	6.0	6.0	6.0	6.0	6.0
			450	6.0	6.0	6.0	6.0	6.0	6.0
			600	6.0	6.0	6.0	6.0	6.0	5.7
		3	400	6.0	6.0	6.0	6.0	6.0	6.0
			450	6.0	6.0	6.0	6.0	6.0	6.0
			600	6.0	6.0	4.8	6.0	6.0	3.0
90 x 70		1.5	400	6.0	6.0	6.0	6.0	6.0	6.0
			450	6.0	6.0	6.0	6.0	6.0	6.0
			600	6.0	6.0	6.0	6.0	6.0	6.0
		3	400	6.0	6.0	6.0	6.0	6.0	6.0
			450	6.0	6.0	6.0	6.0	6.0	6.0
			600	6.0	6.0	6.0	6.0	6.0	4.6
C Subfloor stud walls supporting 2 storeys									
90 x 45 plus 140 x 35 or 2/90 x 45	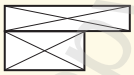 or	1.5	400	6.0	6.0	6.0	6.0	6.0	6.0
			450	6.0	6.0	6.0	6.0	6.0	5.6
			600	6.0	6.0	3.9	6.0	5.5	2.4
		3.0	400	6.0	6.0	2.9	6.0	6.0	1.7
			450	6.0	6.0	–	6.0	4.2	–
			600	5.5	–	–	3.5	–	–
90 x 70		1.5	400	6.0	6.0	6.0	6.0	6.0	6.0
			450	6.0	6.0	6.0	6.0	6.0	6.0
			600	6.0	6.0	6.0	6.0	6.0	4.0
		3	400	6.0	6.0	6.0	6.0	6.0	4.1
			450	6.0	6.0	3.7	6.0	6.0	2.3
			600	6.0	3.5	–	3.8	2.1	–

* For definitiion of loaded dimension see 1.3.

NOTE – Substitution with built-up members is not allowed.

Amd 2
May '06

© The Crown in right of New Zealand, administered by the New Zealand Standards Executive. Access to this standard has been sponsored by the Ministry of Business, Innovation, and Employment under copyright license LN001498. You are not permitted to reproduce or distribute any part of this standard without prior written permission from Standards New Zealand, on behalf of New Zealand Standards Executive, unless your actions are covered by Part 3 of the Copyright Act 1994.

Copyright Standards New Zealand

Table 8.16 – Top plates of loadbearing walls (see 8.7.1.1) – VSG 10 and MSG 10

1.5 kPa and 2 kPa floor loads

Plate size (mm x mm)		Position of truss or rafter centre line relative to centre line of nearest stud	Maximum spacing of trusses or rafters (mm)	Light roof			Heavy roof		
				Stud spacing (mm)					
				400	480	600	400	480	600
				Maximum loaded dimension* of wall (m)					
A Single or top storey (Applies for any spacing of trusses or rafters)									
70 x 45		Anywhere	600	6.0	6.0	6.0	6.0	5.5	4.0
			900	6.0	6.0	4.6	4.3	3.5	2.5
			1200	5.7	4.6	3.3	–	–	–
		Within 150 mm	600	6.0	6.0	6.0	6.0	6.0	6.0
			900	6.0	6.0	6.0	4.3	4.1	3.9
			1200	5.7	5.4	5.0	–	–	–
90 x 45		Anywhere	600	6.0	6.0	6.0	6.0	6.0	5.3
			900	6.0	6.0	6.0	5.8	4.6	3.4
			1200	6.0	6.0	4.4	–	–	–
		Within 150 mm	600	6.0	6.0	6.0	6.0	6.0	6.0
			900	6.0	6.0	6.0	5.8	5.5	5.1
			1200	6.0	6.0	6.0	–	–	–
90 x 45 plus 140 x 35 or 2/90 x 45	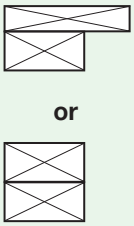	Anywhere	600	6.0	6.0	6.0	6.0	6.0	6.0
			900	6.0	6.0	6.0	6.0	6.0	6.0
			1200	6.0	6.0	6.0	–	–	–
90 x 45 plus 90 x 45 dwang	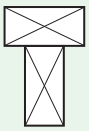	Anywhere	600	6.0	6.0	6.0	6.0	6.0	6.0
			900	6.0	6.0	6.0	6.0	6.0	6.0
			1200	6.0	6.0	6.0	–	–	–

* For definition of loaded dimension see 1.3.

NOTE - Substitution with built-up members is not allowed.

Amd 2 May '06

Copyright Standards New Zealand

© The Crown in right of New Zealand, administered by the New Zealand Standards Executive. Access to this standard has been sponsored by the Ministry of Business, Innovation, and Employment under copyright license LN001498. You are not permitted to reproduce or distribute any part of this standard without prior written permission from Standards New Zealand, on behalf of New Zealand Standards Executive, unless your actions are covered by Part 3 of the Copyright Act 1994.

Table 8.16 – Top plates of loadbearing walls (continued) (see 8.7.1.1) **– VSG 10 and MSG 10**

1.5 kPa and 2 kPa floor loads

Plate size (mm x mm)		Maximum Loaded dimension of wall supporting floor (m)	Maximum spacing of floor joists (mm)	Light roof			Heavy roof		
				Stud spacing (mm)					
				400	480	600	400	480	600
				Maximum loaded dimension* of wall above supporting roof (m)					
B Lower of 2 storeys and subfloor stud walls supporting 1 storey									
90 x 45		1.5	400	6.0	6.0	6.0	6.0	6.0	6.0
			450	6.0	6.0	6.0	6.0	6.0	4.9
			600	6.0	6.0	4.4	6.0	4.9	2.7
		3.0	400	6.0	6.0	5.3	6.0	6.0	3.3
			450	6.0	6.0	3.6	6.0	5.0	2.2
			600	6.0	3.5	–	4.0	2.1	–
90 x 45 plus 140 x 35 or 2/90 x 45	or	1.5	400	6.0	6.0	6.0	6.0	6.0	6.0
			450	6.0	6.0	6.0	6.0	6.0	6.0
			600	6.0	6.0	6.0	6.0	6.0	6.0
		3	400	6.0	6.0	6.0	6.0	6.0	6.0
			450	6.0	6.0	6.0	6.0	6.0	6.0
			600	6.0	6.0	6.0	6.0	6.0	6.0
90 x 70		1.5	400	6.0	6.0	6.0	6.0	6.0	6.0
			450	6.0	6.0	6.0	6.0	6.0	6.0
			600	6.0	6.0	6.0	6.0	6.0	6.0
		3	400	6.0	6.0	6.0	6.0	6.0	6.0
			450	6.0	6.0	6.0	6.0	6.0	6.0
			600	6.0	6.0	6.0	6.0	6.0	6.0
C Subfloor stud walls supporting 2 storeys									
90 x 45 plus 140 x 35 or 2/90 x 45	or	1.5	400	6.0	6.0	6.0	6.0	6.0	6.0
			450	6.0	6.0	6.0	6.0	6.0	6.0
			600	6.0	6.0	2.8	6.0	6.0	6.0
		3.0	400	6.0	6.0	6.0	6.0	6.0	6.0
			450	6.0	6.0	6.0	6.0	6.0	5.6
			600	6.0	6.0	1.8	6.0	5.5	–
90 x 70		1.5	400	6.0	6.0	6.0	6.0	6.0	6.0
			450	6.0	6.0	6.0	6.0	6.0	6.0
			600	6.0	6.0	6.0	6.0	6.0	6.0
		3	400	6.0	6.0	6.0	6.0	6.0	6.0
			450	6.0	6.0	6.0	6.0	6.0	6.0
			600	6.0	4.9	3.8	3.8	3.0	2.3

* For definition of loaded dimension see 1.3.

NOTE – Substitution with built-up members is not allowed.

Amd 2
May '06

© The Crown in right of New Zealand, administered by the New Zealand Standards Executive. Access to this standard has been sponsored by the Ministry of Business, Innovation, and Employment under copyright license LN001498. You are not permitted to reproduce or distribute any part of this standard without prior written permission from Standards New Zealand, on behalf of New Zealand Standards Executive, unless your actions are covered by Part 3 of the Copyright Act 1994.

Copyright Standards New Zealand

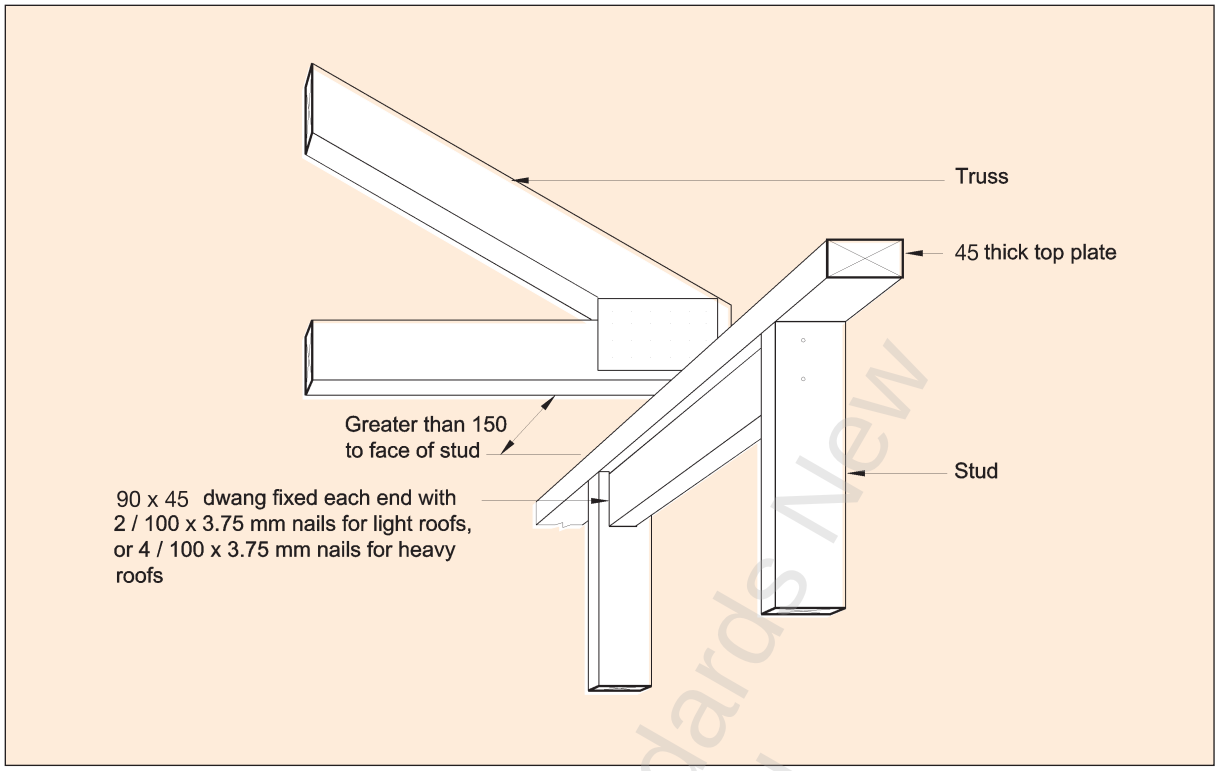

Amd 2 May '06

Amd 2 May '06

Figure 8.13 – Strengthening top plate (see 8.7.1.1 and table 8.16)

8.7.2 *Bottom plates*

8.7.2.1
Bottom plates shall be of the following dimensions:

(a) *Loadbearing walls*: As given by table 8.17 except as provided by 8.7.2.2 (for walls supporting floors with a live load of 3 kPa see table 14.15);

(b) *Non-loadbearing walls*: The same width as the studs and at least 35 mm thick. Amd 2 May '06

8.7.2.2
The *bottom plate* of a *loadbearing wall* which is continuously supported by either:

(a) A *joist* (including a *boundary joist*); or

(b) Solid *blocking*; or

(c) A concrete floor slab;

shall be the same width as the *studs* and at least 35 mm thick. Amd 2 May '06

8.7.3 *Joints in plates*

8.7.3.1
Joints in *top plates* shall be made only over supports being either a *stud* or *blocking*.

Copyright Standards New Zealand

© The Crown in right of New Zealand, administered by the New Zealand Standards Executive. Access to this standard has been sponsored by the Ministry of Business, Innovation, and Employment under copyright license LN001498. You are not permitted to reproduce or distribute any part of this standard without prior written permission from Standards New Zealand, on behalf of New Zealand Standards Executive, unless your actions are covered by Part 3 of the Copyright Act 1994.

Table 8.17 – Bottom plates of loadbearing walls (see 8.7.2.1) **– No. 1 Framing and MSG 6**

1.5 kPa and 2 kPa floor loads

Plate size (mm x mm)	Maximum loaded dimension of wall supporting floor (m)	Maximum spacing of floor joists (m)	Light roof			Heavy roof		
			Stud spacing (m)					
			400	480	600	400	480	600
			Maximum loaded dimension* of wall supporting roof (m)					
A Single or top storey								
70 x 35	NA	400	3.3	2.4	1.5	1.5	–	–
		450	2.7	1.9	–	–	–	–
70 x 45	NA	400	6.0	5.2	3.8	3.3	2.5	1.7
		450	5.6	4.4	3.2	2.8	2.1	1.4
		600	3.2	2.4	1.6	1.7	1.2	–
70 x 70	NA	400	6.0	6.0	6.0	6.0	6.0	6.0
		450	6.0	6.0	6.0	6.0	6.0	5.4
		600	6.0	6.0	6.0	6.0	4.9	3.7
90 x 35	NA	400	4.7	3.7	2.5	2.3	1.7	–
		450	4.0	3.0	2.0	1.9	1.3	–
		600	1.4	–	–	–	–	–
90 x 45	NA	400	6.0	6.0	5.4	4.7	3.7	2.6
		450	6.0	6.0	4.6	4.0	3.1	2.2
		600	4.6	3.5	2.5	2.6	1.9	1.3
90 x 70	NA	400	6.0	6.0	6.0	6.0	6.0	6.0
		450	6.0	6.0	6.0	6.0	6.0	6.0
		600	6.0	6.0	6.0	6.0	6.0	5.1
B One floor above								
90 x 45	1.5	400	3.8	2.0	–	2.3	1.2	–
		450	2.6	–	–	1.5	–	–
2/90 x 45	1.5	400	6.0	6.0	6.0	6.0	6.0	5.2
		450	6.0	6.0	6.0	6.0	6.0	4.1
		600	6.0	4.6	2.5	3.9	2.6	1.3
	3.0	400	6.0	6.0	4.0	6.0	4.8	2.4
		450	6.0	5.6	2.3	5.6	3.5	1.3
		600	3.7	1.5	–	2.0	–	–
90 x 70	1.5	400	6.0	6.0	6.0	6.0	6.0	6.0
		450	6.0	6.0	6.0	6.0	6.0	5.2
		600	6.0	6.0	4.5	6.0	4.6	2.8
	3.0	400	6.0	6.0	5.9	6.0	6.0	3.7
		450	6.0	6.0	4.0	6.0	4.9	2.5
		600	5.9	3.1	–	3.7	1.9	–
C Two floors above								
2/90 x 45	1.5	400	6.0	6.0	3.1	6.0	4.3	1.8
		450	6.0	4.7	1.5	5.1	2.9	–
		600	2.6	–	–	1.3	–	–
	3.0	400	2.1	–	–	1.2	–	–
90 x 70	1.5	400	6.0	6.0	5.0	6.0	5.8	3.1
		450	6.0	6.0	3.2	6.0	4.3	1.9
		600	5.0	2.3	–	3.1	1.3	–
	3.0	400	5.0	–	–	3.1	–	–
		450	2.2	–	–	1.3	–	–

* For definition of loaded dimension see 1.3. NOTE – Substitution with built-up members is not allowed.

Amd 2
May '06

© The Crown in right of New Zealand, administered by the New Zealand Standards Executive. Access to this standard has been sponsored by the Ministry of Business, Innovation, and Employment under copyright license LN001498. You are not permitted to reproduce or distribute any part of this standard without prior written permission from Standards New Zealand, on behalf of New Zealand Standards Executive, unless your actions are covered by Part 3 of the Copyright Act 1994.

Copyright Standards New Zealand

© The Crown in right of New Zealand, administered by the New Zealand Standards Executive. Access to this standard has been sponsored by the Ministry of Business, Innovation, and Employment under copyright license LN001498. You are not permitted to reproduce or distribute any part of this standard without prior written permission from Standards New Zealand, on behalf of New Zealand Standards Executive, unless your actions are covered by Part 3 of the Copyright Act 1994.

Table 8.17 – Bottom plates of loadbearing walls (see 8.7.2.1) – VSG 8 and MSG 8

1.5 kPa and 2 kPa floor loads

Plate size (mm x mm)	Maximum loaded dimension of wall supporting floor (m)	Maximum spacing of floor joists (m)	Light roof			Heavy roof		
			Stud spacing (m)					
			400	480	600	400	480	600
			Maximum loaded dimension* of wall supporting roof (m)					
A Single or top storey								
70 x 35	NA	400	5.3	4.2	2.9	2.6	1.9	1.3
		450	4.5	3.5	2.4	2.2	1.6	–
		600	1.6	–	–	–	–	–
70 x 45	NA	400	6.0	6.0	6.0	5.2	4.1	3.0
		450	6.0	6.0	5.1	4.5	3.5	2.5
		600	4.9	3.8	2.7	2.8	2.1	1.4
70 x 70	NA	400	6.0	6.0	6.0	6.0	6.0	6.0
		450	6.0	6.0	6.0	6.0	6.0	6.0
		600	6.0	6.0	6.0	6.0	6.0	5.7
90 x 35	NA	400	6.0	5.8	4.3	3.7	2.9	2.0
		450	6.0	5.0	3.6	3.2	2.4	1.6
		600	2.5	1.8	–	1.3	–	–
90 x 45	NA	400	6.0	6.0	6.0	6.0	5.7	4.3
		450	6.0	6.0	6.0	6.0	4.9	3.6
		600	6.0	5.4	4.0	3.9	3.0	2.2
90 x 70	NA	400	6.0	6.0	6.0	6.0	6.0	6.0
		450	6.0	6.0	6.0	6.0	6.0	6.0
		600	6.0	6.0	6.0	6.0	6.0	6.0

* For definition of loaded dimension see 1.3.

NOTE – Substitution with built-up members is not allowed.

Amd 2 May '06

Copyright Standards New Zealand

© The Crown in right of New Zealand, administered by the New Zealand Standards Executive. Access to this standard has been sponsored by the Ministry of Business, Innovation, and Employment under copyright license LN001498. You are not permitted to reproduce or distribute any part of this standard without prior written permission from Standards New Zealand, on behalf of New Zealand Standards Executive, unless your actions are covered by Part 3 of the Copyright Act 1994.

Table 8.17 – Bottom plates of loadbearing walls (continued) (see 8.7.2.1) **– VSG 8 and MSG 8**

1.5 kPa and 2 kPa floor loads

Plate size (mm x mm)	Maximum loaded dimension of wall supporting floor (m)	Maximum spacing of floor joists (m)	Light roof			Heavy roof		
			Stud spacing (m)					
			400	480	600	400	480	600
			Maximum loaded dimension* of wall supporting roof (m)					
B One floor above								
90 x 45	1.5	400	6.0	5.5	3.1	5.0	3.4	1.8
		450	6.0	4.1	2.0	3.9	2.5	–
		600	2.6	1.2	–	1.4	–	–
	3.0	400	3.7	1.3	–	2.2	–	–
		450	2.1	–	–	1.2	–	–
2/90 x 45	1.5	400	6.0	6.0	6.0	6.0	6.0	6.0
		450	6.0	6.0	6.0	6.0	6.0	6.0
		600	6.0	6.0	5.5	6.0	4.8	3.1
	3.0	400	6.0	6.0	6.0	6.0	6.0	6.0
		450	6.0	6.0	6.0	6.0	6.0	4.8
		600	6.0	5.2	2.4	4.7	3.0	1.2
90 x 70	1.5	400	6.0	6.0	6.0	6.0	6.0	6.0
		450	6.0	6.0	6.0	6.0	6.0	6.0
		600	6.0	6.0	6.0	6.0	6.0	5.7
	3.0	400	6.0	6.0	6.0	6.0	6.0	6.0
		450	6.0	6.0	6.0	6.0	6.0	6.0
		600	6.0	6.0	4.8	6.0	5.5	3.0
C Two floors above								
90 x 45	1.5	400	2.8	–	–	1.7	–	–
		450	1.2	–	–	–	–	–
2/90 x 45	1.5	400	6.0	6.0	6.0	6.0	6.0	5.7
		450	6.0	6.0	6.0	6.0	6.0	4.2
		600	6.0	4.2	1.3	4.0	2.3	–
	3.0	400	6.0	5.7	–	6.0	3.6	–
		450	6.0	2.9	–	4.7	1.7	–
90 x 70	1.5	400	6.0	6.0	6.0	6.0	6.0	6.0
		450	6.0	6.0	6.0	6.0	6.0	5.8
		600	6.0	6.0	3.9	6.0	4.9	2.4
	3.0	400	6.0	6.0	3.3	6.0	5.8	2.0
		450	6.0	5.9	–	6.0	3.7	–
		600	3.3	–	–	2.0	–	–

* For definition of loaded dimension see 1.3.

NOTE – Substitution with built-up members is not allowed.

Amd 2
May '06

Copyright Standards New Zealand

© The Crown in right of New Zealand, administered by the New Zealand Standards Executive. Access to this standard has been sponsored by the Ministry of Business, Innovation, and Employment under copyright license LN001498. You are not permitted to reproduce or distribute any part of this standard without prior written permission from Standards New Zealand, on behalf of New Zealand Standards Executive, unless your actions are covered by Part 3 of the Copyright Act 1994.

Table 8.17 – Bottom plates of loadbearing walls (see 8.7.2.1) **– VSG 10 and MSG 10**

1.5 kPa and 2 kPa floor loads

Plate size (mm x mm)	Maximum loaded dimension of wall supporting floor (m)	Maximum spacing of floor joists (m)	Light roof			Heavy roof		
			Stud spacing (m)					
			400	480	600	400	480	600
			Maximum loaded dimension* of wall supporting roof (m)					
A Single or top storey								
70 x 35	NA	400 450 600	6.0 6.0 2.4	6.0 5.7 1.7	5.0 4.2 –	4.3 3.7 1.2	3.4 2.8 –	2.4 2.0 –
70 x 45	NA	400 450 600	6.0 6.0 6.0	6.0 6.0 5.1	6.0 6.0 3.8	6.0 6.0 3.7	6.0 5.6 2.9	4.9 4.2 2.1
70 x 70	NA	400 450 600	6.0 6.0 6.0	6.0 6.0 6.0	6.0 6.0 6.0	6.0 6.0 6.0	6.0 6.0 6.0	6.0 6.0 6.0
90 x 35	NA	400 450 600	6.0 6.0 3.5	6.0 6.0 2.6	6.0 5.9 1.8	5.9 5.1 1.9	4.7 4.0 1.4	3.5 2.9 –
90 x 45	NA	400 450 600	6.0 6.0 6.0	6.0 6.0 6.0	6.0 6.0 5.3	6.0 6.0 5.1	6.0 6.0 4.1	6.0 5.8 3.0
90 x 70	NA	400 450 600	6.0 6.0 6.0	6.0 6.0 6.0	6.0 6.0 6.0	6.0 6.0 6.0	6.0 6.0 6.0	6.0 6.0 6.0

* For definition of loaded dimension see 1.3.

NOTE – Substitution with built-up members is not allowed.

Amd 2
May '06

Copyright Standards New Zealand

© The Crown in right of New Zealand, administered by the New Zealand Standards Executive. Access to this standard has been sponsored by the Ministry of Business, Innovation, and Employment under copyright license LN001498. You are not permitted to reproduce or distribute any part of this standard without prior written permission from Standards New Zealand, on behalf of New Zealand Standards Executive, unless your actions are covered by Part 3 of the Copyright Act 1994.

Table 8.17 – Bottom plates of loadbearing walls (continued) (see 8.7.2.1) **– VSG 10 and MSG 10**

1.5 kPa and 2 kPa floor loads

Plate size (mm x mm)	Maximum loaded dimension of wall supporting floor (m)	Maximum spacing of floor joists (m)	Light roof			Heavy roof		
			Stud spacing (m)					
			400	480	600	400	480	600
			Maximum loaded dimension* of wall supporting roof (m)					
B One floor above								
90 x 45	1.5	400	6.0	6.0	6.0	6.0	6.0	4.5
		450	6.0	6.0	5.6	6.0	5.5	3.5
		600	4.7	2.9	1.2	2.6	1.6	–
	3.0	400	6.0	6.0	3.0	6.0	4.0	1.8
		450	6.0	4.5	1.5	4.8	2.8	–
		600	1.6	–	–	–	–	–
2/90 x 45	1.5	400	6.0	6.0	6.0	6.0	6.0	6.0
		450	6.0	6.0	6.0	6.0	6.0	6.0
		600	6.0	6.0	6.0	6.0	6.0	4.8
	3.0	400	6.0	6.0	6.0	6.0	6.0	6.0
		450	6.0	6.0	6.0	6.0	6.0	6.0
		600	6.0	6.0	5.1	6.0	5.0	2.9
90 x 70	1.5	400	6.0	6.0	6.0	6.0	6.0	6.0
		450	6.0	6.0	6.0	6.0	6.0	6.0
		600	6.0	6.0	6.0	6.0	6.0	6.0
	3.0	400	6.0	6.0	6.0	6.0	6.0	6.0
		450	6.0	6.0	6.0	6.0	6.0	6.0
		600	6.0	6.0	6.0	6.0	6.0	6.0
C Two floors above								
90 x 45	1.5	400	6.0	5.6	2.1	5.7	3.5	1.2
		450	6.0	3.7	–	4.2	2.2	–
2/90 x 45	1.5	400	6.0	6.0	6.0	6.0	6.0	6.0
		450	6.0	6.0	6.0	6.0	6.0	6.0
		600	6.0	6.0	4.1	6.0	4.4	2.2
	3.0	400	6.0	6.0	6.0	6.0	6.0	6.0
		450	6.0	6.0	6.0	6.0	6.0	3.9
		600	5.0	1.4	–	2.8	–	–
90 x 70	1.5	400	6.0	6.0	6.0	6.0	6.0	6.0
		450	6.0	6.0	6.0	6.0	6.0	6.0
		600	6.0	6.0	6.0	6.0	6.0	6.0
	3.0	400	6.0	6.0	6.0	6.0	6.0	6.0
		450	6.0	6.0	6.0	6.0	6.0	6.0
		600	6.0	6.0	2.2	6.0	4.9	1.3

* For definition of loaded dimension see 1.3.

NOTE – Substitution with built-up members is not allowed.

Amd 2
May '06

Copyright Standards New Zealand

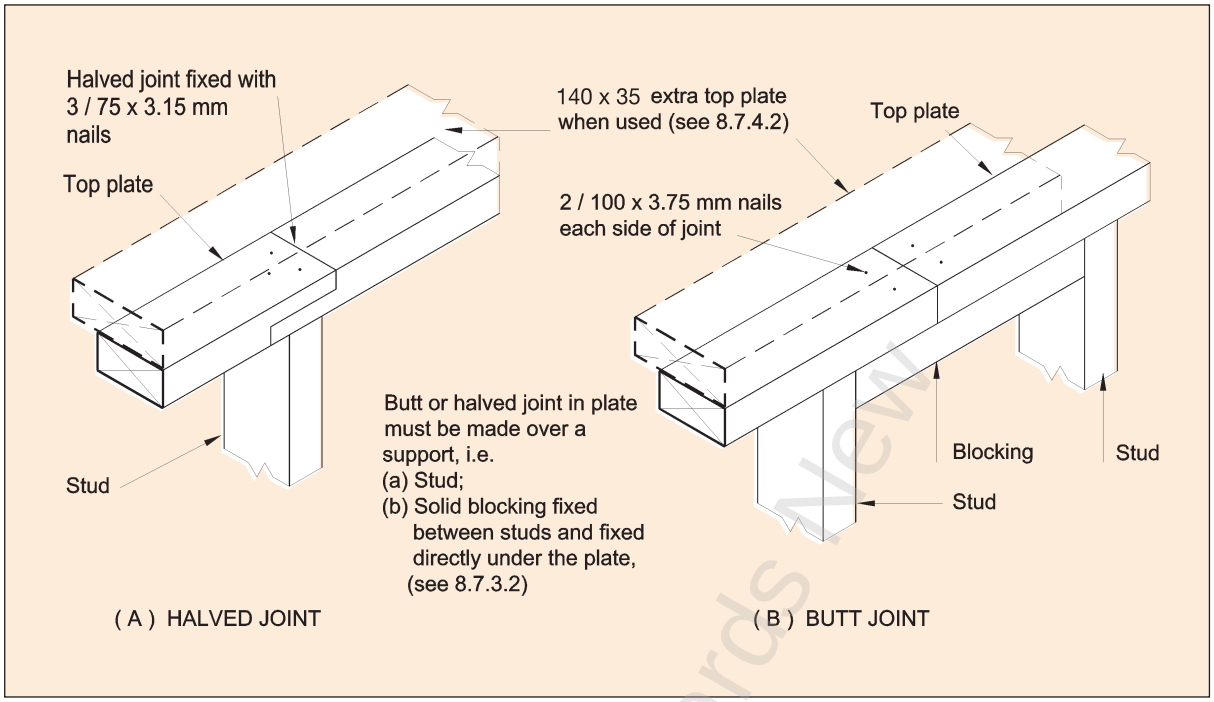

Amd 2 May '06

Figure 8.14 – Connecting top plates – Walls not containing bracing (see 8.7.3.2)

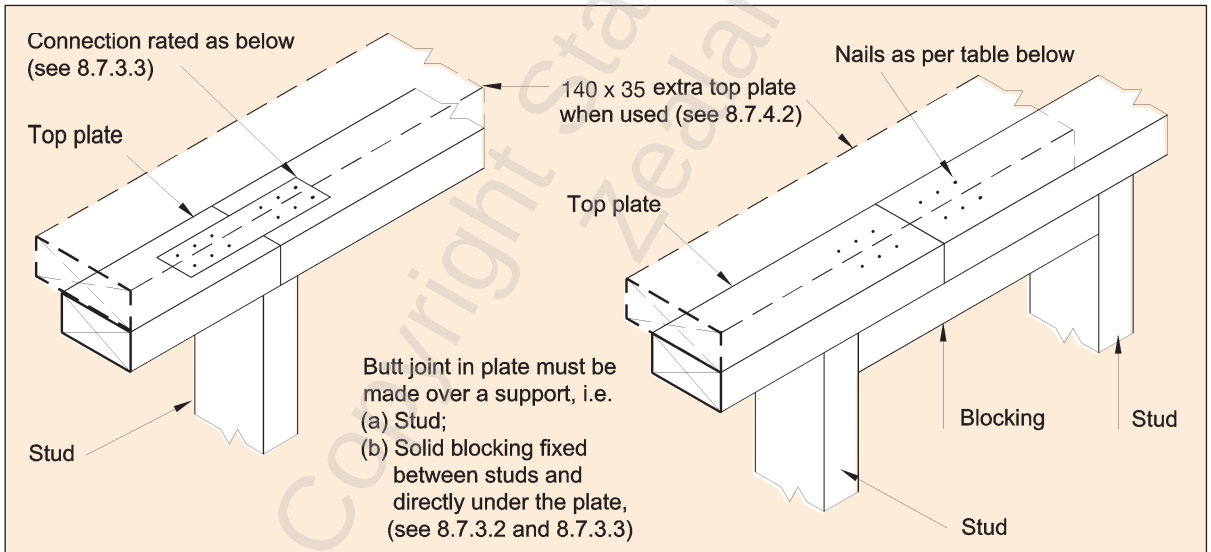

Amd 2 May '06

Capacities of metal plate joints[2]	
Up to 3 kN	3 / 30 x 3.15 mm nails per side
Up to 6 kN	6 / 30 x 3.15 mm nails per side

Capacities of nailed joints[2]	
Up to 3 kN	3 / 100 x 3.75 mm nails per side
Up to 6 kN	6 / 100 x 3.75 mm nails per side

Amd 1 Dec '00

NOTE -

(1) See section 4 for durability requirements.

(2) Not required when extra top plate is used.

Amd 1 Dec '00

Figure 8.15 – Connecting top plates in line – Walls containing bracing (see 8.7.3.3)

© The Crown in right of New Zealand, administered by the New Zealand Standards Executive. Access to this standard has been sponsored by the Ministry of Business, Innovation, and Employment under copyright license LN001498. You are not permitted to reproduce or distribute any part of this standard without prior written permission from Standards New Zealand, on behalf of New Zealand Standards Executive, unless your actions are covered by Part 3 of the Copyright Act 1994.

Copyright Standards New Zealand

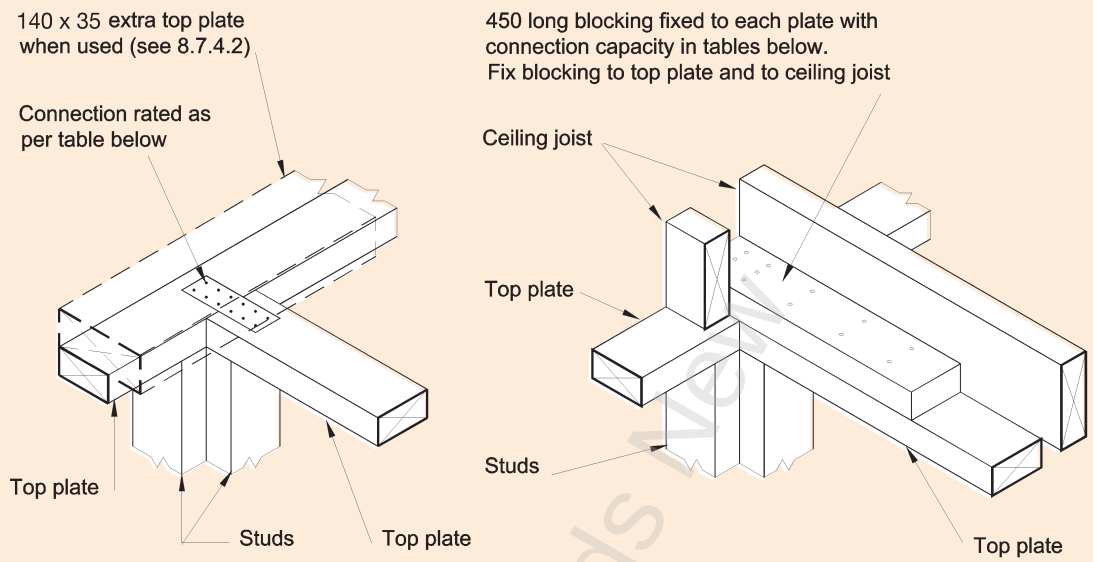

Capacities of metal plate joints	
Up to 3 kN	3 / 30 x 3.15 mm nails per side
Up to 6 kN	6 / 30 x 3.15 mm nails per side

Capacities of nailed joints	
Up to 3 kN	3 / 100 x 3.75 mm nails per side
Up to 6 kN	6 / 100 x 3.75 mm nails per side

NOTE - See section 4 for durability requirements.

Figure 8.16 – Connecting top plates to external walls at right angles – Walls containing bracing (see 8.7.3.4)

8.7.3.2
Joints in the *top plate* of a wall that does not contain any *wall bracing elements* (either in line or at wall intersections), shall be halved and nailed at the joints, see figure 8.14(A), or be butted over *blocking* and nailed, see figure 8.14(B), or be provided with an alternative fixing, having a *capacity* in tension or compression of 3 kN.

8.7.3.3
For single *storey* buildings the connection in line of the *top plate* of a wall that contains one or more *wall bracing elements* shall be jointed according to the *bracing capacity* of the highest-rated individual *wall bracing elements* as follows:

(a) *Bracing capacity* not exceeding 100 *bracing units*:
A 3 kN connection as shown in figure 8.15 or by an alternative fixing of 3 kN *capacity* tension or compression along the plate;

(b) *Bracing capacity* exceeding 100 *bracing units*:
A 6 kN connection as shown in figure 8.15 or by an alternative fixing of 6 kN *capacity* tension or compression along the plate.

© The Crown in right of New Zealand, administered by the New Zealand Standards Executive. Access to this standard has been sponsored by the Ministry of Business, Innovation, and Employment under copyright license LN001498. You are not permitted to reproduce or distribute any part of this standard without prior written permission from Standards New Zealand, on behalf of New Zealand Standards Executive, unless your actions are covered by Part 3 of the Copyright Act 1994.

Copyright Standards New Zealand

© The Crown in right of New Zealand, administered by the New Zealand Standards Executive. Access to this standard has been sponsored by the Ministry of Business, Innovation, and Employment under copyright license LN001498. You are not permitted to reproduce or distribute any part of this standard without prior written permission from Standards New Zealand, on behalf of New Zealand Standards Executive, unless your actions are covered by Part 3 of the Copyright Act 1994.

8.7.3.4
Each wall that contains one or more *wall bracing elements* shall be connected at *top plate* level, either directly, or through a *framing* member in the line of the wall, to *external walls* at right angles to it. *Top plate* fixing(s) of the *capacity* in tension or compression along the line of the *wall bracing element* are given as follows:

(a) For each wall containing *wall bracing elements* with a total *bracing capacity* of not more than 125 *bracing units*:
To at least one such *external wall* by a fixing as shown in figure 8.16 of 6 kN *capacity*;

(b) For each wall containing *wall bracing elements* with a total *bracing capacity* of not more than 250 *bracing units*:
To at least 2 *external walls* by fixings as shown in figure 8.16 each of 6 kN *capacity*;

(c) For each wall containing *wall bracing elements* with a total *bracing capacity* of more than 250 *bracing units*:
To at least 2 *external walls* by fixings as shown in figure 8.16 each having a rating of not less than 2.4 kN per 100 *bracing units*.

8.7.4 *Lateral support of top plates*

8.7.4.1
Top plates shall be laterally supported by:

(a) A *diaphragm* complying with 5.6; or

(b) *Framing* members *spaced* at not greater than 2.5 m.

Where the required *framing* support is not provided directly by intersecting *top plates*, joists, rafters, trusses or *purlins* then it shall be provided by 70 mm x 45 mm connecting members. The members shall run between the *top plate* and a floor or roof *framing* member that is parallel to the wall under consideration and to which ceiling framing is attached. Such connecting members shall be connected as shown in figure 8.17.

8.7.4.2
When the *top plate* is on the boundary of a ceiling *lining,* having a density less than 600 kg/m^3, and the distance between *bracing lines* at right angles to the plate is between 5.0 m and 6.0 m, the 90 x 45 *top plate* shall be strengthened by the addition of a 140 x 35 plate (see figure 8.18).

Copyright Standards New Zealand

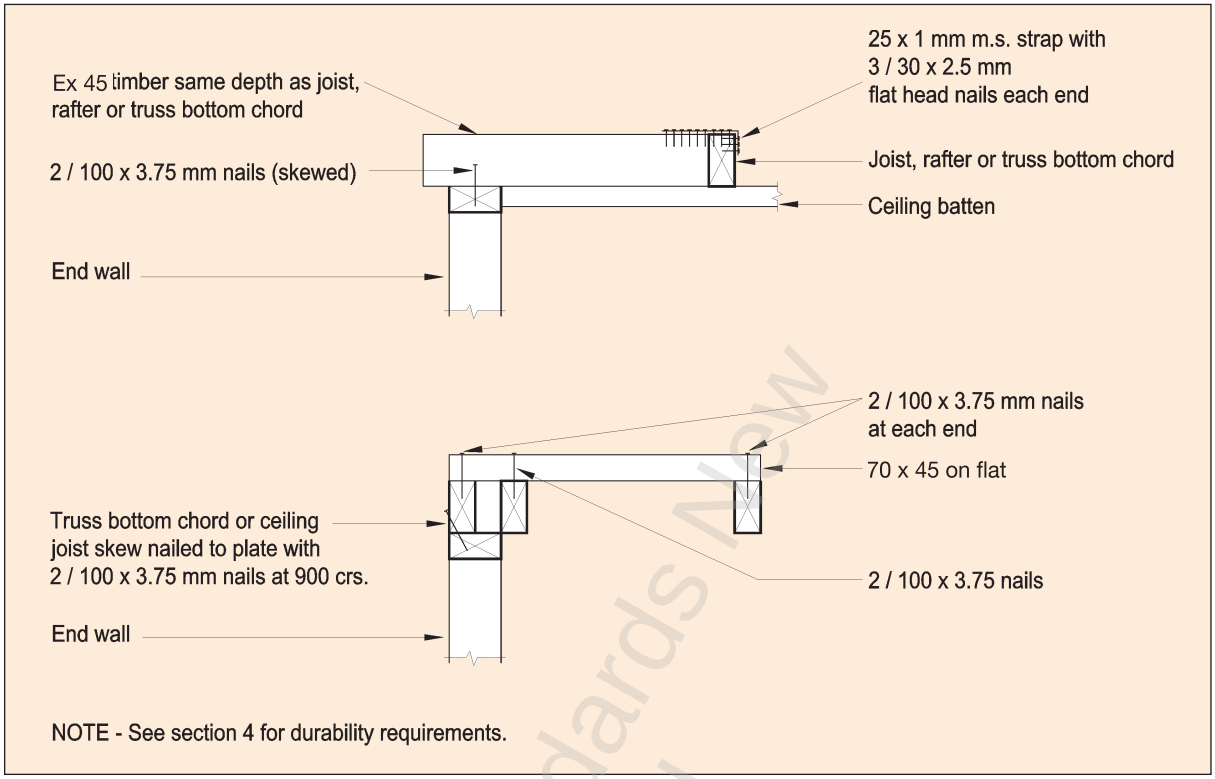

Figure 8.17 – Connecting members providing lateral support to top plates (see 8.7.4.1)

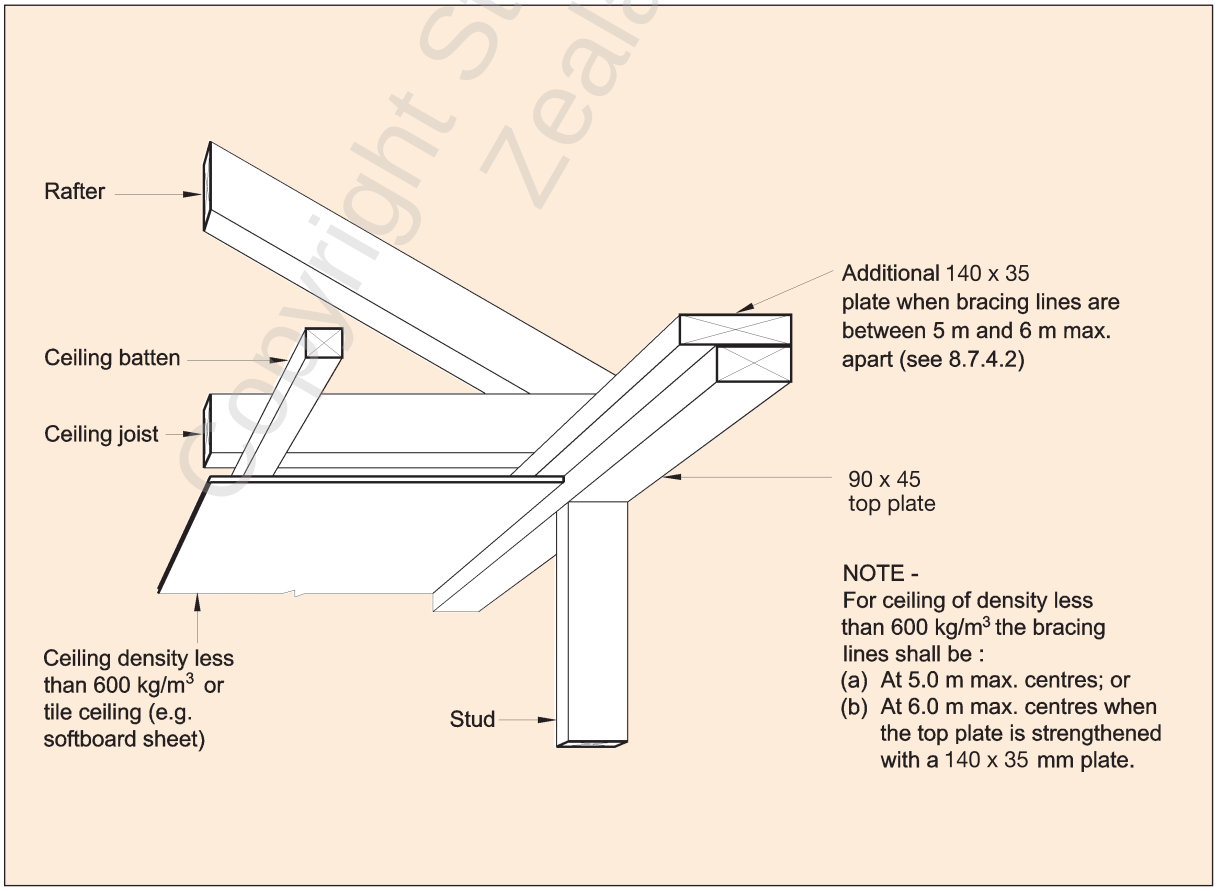

Figure 8.18 – Strengthening top plate for low density ceilings (against horizontal forces) (see 8.7.4.2)

© The Crown in right of New Zealand, administered by the New Zealand Standards Executive. Access to this standard has been sponsored by the Ministry of Business, Innovation, and Employment under copyright license LN001498. You are not permitted to reproduce or distribute any part of this standard without prior written permission from Standards New Zealand, on behalf of New Zealand Standards Executive, unless your actions are covered by Part 3 of the Copyright Act 1994.

Copyright Standards New Zealand

Amd 1 Dec '00

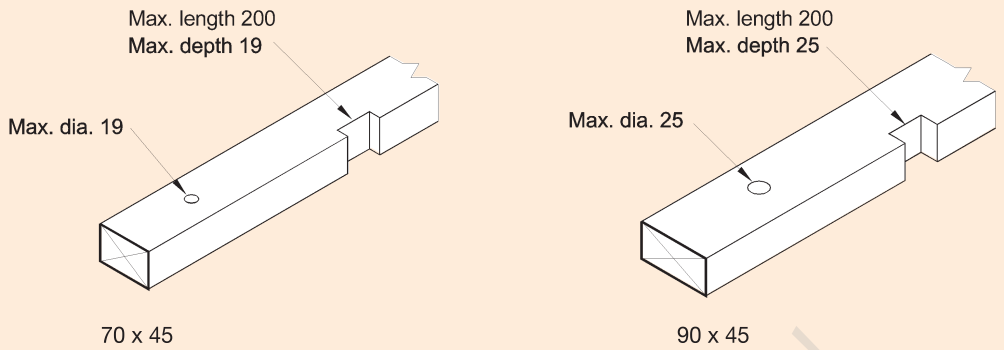

Amd 1 Dec '00

NOTE – 100 min. offset between edge of holes and notch.

Figure 8.19 – Checking and boring top plates (see 8.7.5.1)

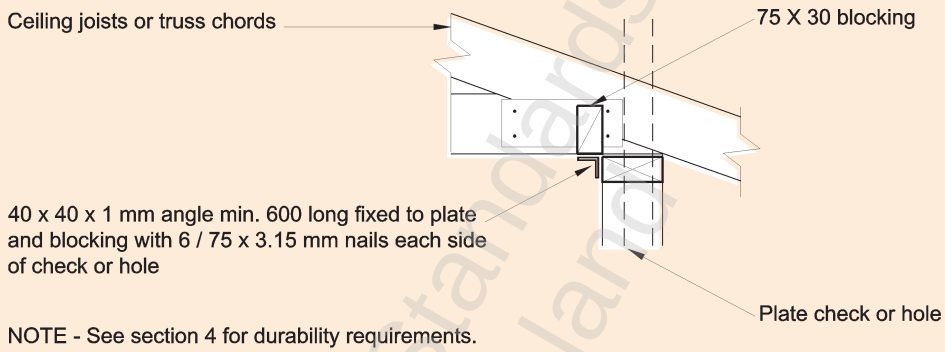

NOTE - See section 4 for durability requirements.

Figure 8.20 – Cut top plate (see 8.7.5.1(c))

8.7.5 *Holes and checks in plates*

C8.7.5.1

Strengthening is required against loads vertical to, horizontal to, or along the plate.

Amd 1 Dec '00

8.7.5.1 ***Top plates***

The sizes of holes or notches shall comply with the dimensions shown in figure 8.19. Where the size of a hole or notch exceeds these dimensions the plates shall be strengthened by one of the following methods:

(a) A 75 mm x 40 mm member x 600 mm long nailed to the exterior side of the plate with 4/75 x 3.15 nails on each side of the hole or notch; or

(b) A 75 mm x 40 mm eaves runner connected to all *studs* and no more than 250 mm below the *top plate*; or

(c) A 75 x 30 mm *blocking* fitted between ceiling joists or trusses above cut *top plates* and the steel angle shown in figure 8.20.

8.7.5.2 ***Bottom plates***

Where holes or face notches exceed 50 % of the width of the *bottom plate,* fix the plate against sideways movement on each side of the hole or notch, with one 100 mm x 3.75 mm nail.

© The Crown in right of New Zealand, administered by the New Zealand Standards Executive. Access to this standard has been sponsored by the Ministry of Business, Innovation, and Employment under copyright license LN001498. You are not permitted to reproduce or distribute any part of this standard without prior written permission from Standards New Zealand, on behalf of New Zealand Standards Executive, unless your actions are covered by Part 3 of the Copyright Act 1994.

Copyright Standards New Zealand

© The Crown in right of New Zealand, administered by the New Zealand Standards Executive. Access to this standard has been sponsored by the Ministry of Business, Innovation, and Employment under copyright license LN001498. You are not permitted to reproduce or distribute any part of this standard without prior written permission from Standards New Zealand, on behalf of New Zealand Standards Executive, unless your actions are covered by Part 3 of the Copyright Act 1994.

Table 8.18 – Fixing of top plate of wall to supporting members such as studs and lintels at 600 mm centres (see 8.7.6)

Amd 1 Dec '00

Loaded dimension of wall (m)	Light roof								Heavy roof			
	Roof member spacing (mm)											
	900				1200				900			
	Wind zone				Wind zone				Wind zone			
	L	M	H	VH	L	M	H	VH	L	M	H	VH
	Fixing type (see below)											
3.0	B	B	B	C	B	B	B	C	A	A	B	B
3.5	B	B	B	C	B	B	B	C	A	A	B	B
4.0	B	B	C	C	B	B	C	C	A	A	B	C
4.5	B	B	C	C	B	B	C	C	A	A	B	C
5.0	B	B	C	D	B	B	C	D	A	A	B	C
5.5	B	B	C	D	B	B	C	D	A	A	B	C
6.0	B	B	C	D	B	B	C	D	A	B	B	C

Fixing type	Fixing to resist uplift	Capacity of alternative fixing (kN)
A	2/100 x 3.75 skewed nails	0.7
B	2/100 x 3.75 skewed nails + 1 wire dog	2.7
C	2/100 x 3.75 skewed nails + 2 wire dogs	4.7
D	2/100 x 3.75 skewed nails + 3 wire dogs	6.7

Amd 1 Dec '00

8.7.6 ***Connection of plates to studs***

The fixing of *top plates* supporting roof members to wall *studs* or *lintels* shall be in accordance with table 8.18.

C8.7.6

Each additional fixing required should be as close as possible to a truss.

8.8 Dwangs and walings

8.8.1

Dwangs, *walings*, and *metal angle walings*, where required by 8.5.4, shall be *spaced* at not more than 1350 mm centre-to-centre and shall be of not less than the following dimensions:

(a) *Dwangs*: 45 mm x 45 mm or 70 mm x 35 mm;

(b) *Walings*: 70 mm x 19 mm;

(c) *Metal angle walings*: 22 mm x 22 mm x 1.2 mm angle.

C8.8.1

Dwangs may be staggered either side of a horizontal straight line by a centre-to-centre distance not exceeding 300 mm.

8.8.2

Dwangs for the support of *cladding* or *lining* shall be flush with the face of *studs*.

8.8.3

Walings may be butt jointed on a *stud* anywhere along their length with the fixings required by table 8.19 on both sides of the butt joint.

Copyright Standards New Zealand

8.8.4
Walings and *metal angle walings* shall not be checked into opposite sides of the same *stud* within a distance of 150 mm, measured along the *stud*.

8.8.5
Ribbon boards supporting joists in balloon *framing* shall be 90 mm x 45 mm on edge, checked 25 mm into *studs* (see figure 8.21).

8.8.6 *Nailing schedule*
Table 8.19 lists the size, number and location of nails to be used in wall *framing*. See 2.4.4 for other requirements for nails.

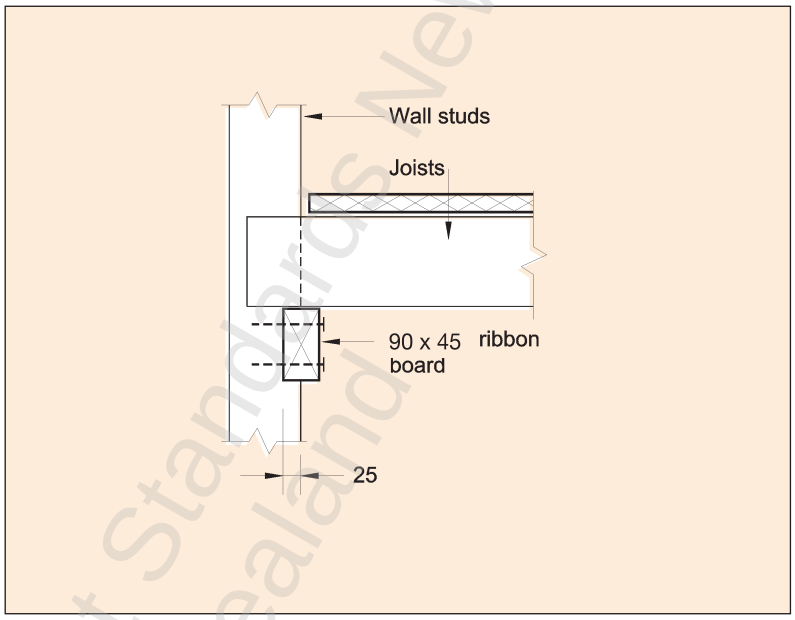

Figure 8.21 – Ribbon boards (see 8.8.5)

Copyright Standards New Zealand

© The Crown in right of New Zealand, administered by the New Zealand Standards Executive. Access to this standard has been sponsored by the Ministry of Business, Innovation, and Employment under copyright license LN001498. You are not permitted to reproduce or distribute any part of this standard without prior written permission from Standards New Zealand, on behalf of New Zealand Standards Executive, unless your actions are covered by Part 3 of the Copyright Act 1994.

© The Crown in right of New Zealand, administered by the New Zealand Standards Executive. Access to this standard has been sponsored by the Ministry of Business, Innovation, and Employment under copyright license LN001498. You are not permitted to reproduce or distribute any part of this standard without prior written permission from Standards New Zealand, on behalf of New Zealand Standards Executive, unless your actions are covered by Part 3 of the Copyright Act 1994.

Table 8.19 – Nailing schedule for hand driven and power driven nails (see 8.8.6)

Joint	Hand driven nails		Power driven nails	
	Length (mm) x diameter (mm) and type	Number and location	Length (mm) x diameter (mm) and type	Number and location
Bottom plate to floor framing at:				
(a) External walls and internal wall bracing elements	100 x 3.75	2 at 600 mm centres	90 x 3.15	3 at 600 mm centres
(b) Internal walls (may be nailed to floor decking)	100 x 3.75	1 at 600 mm centres	90 x 3.15	1 at 600 mm centres
(c) Trimmer not exceeding 4.2 m long	100 x 3.75	4 (end nailed)	90 x 3.15	6 (end nailed)
Dwang to stud	75 x 3.15 or 100 x 3.75	2 (skewed) 2 (end nailed)	75 x 3.06 90 x 3.15	2 (skewed) 2 (end nailed)
Fishplate to straightened stud	60 x 2.8	4 each side of cut	60 x 2.8	4 (each side of cut)
Half joint in top plate	75 x 3.15	3	75 x 3.06	4
Lintel to trimming stud	75 x 3.15 or 100 x 3.75	4 (skewed) 2 (end nailed)	90 x 3.15	3 (end nailed)
Ribbon board to stud	100 x 3.75	2	90 x 3.15	3
Sill or header trimmer to trimming stud for:				
(a) Trimmer not exceeding 2.4 m long	100 x 3.75	2 (end nailed)	90 x 3.15	3 (end nailed)
(b) Trimmer not exceeding 3.6 m long	100 x 3.75	3 (end nailed)	90 x 3.15	5 (end nailed)
(c) Trimmers not exceeding 4.2 m long	100 x 3.75	4 (end nailed)	90 x 3.15	6 (end nailed)
Solid plaster batten to stud	60 x 2.8 (galv.)	500 mm centres	60 x 2.8 (galv.)	500 mm centres
Stud to plate	100 x 3.75 or 75 x 3.15	2 (end nailed) 4 (skewed)	75 x 3.06 90 x 3.15	4 (skew nailed) 3 (end nailed)
Top plate 140 mm x 35 mm to 90 mm x 45 mm and top plate to lintel	100 x 3.75	2 at 500 mm centres	90 x 3.3 90 x 3.15	3 at 500 mm 3 at 500 mm centres
Trimming studs at openings, blocking and studs at wall intersections	100 x 3.75	600 mm centres	90 x 3.3 90 x 3.15	600 mm centres
Trimming stud to doubled stud immediately under lintel	100 x 3.75	2	90 x 3.15	2
Waling to stud	60 x 2.8	2	60 x 2.8	2

NOTE –
(1) Nail lengths and diameters are the minimum required.
(2) Refer to 4.4 for required protective coatings for metal fasteners.

Copyright Standards New Zealand

NOTES

© The Crown in right of New Zealand, administered by the New Zealand Standards Executive. Access to this standard has been sponsored by the Ministry of Business, Innovation, and Employment under copyright license LN001498. You are not permitted to reproduce or distribute any part of this standard without prior written permission from Standards New Zealand, on behalf of New Zealand Standards Executive, unless your actions are covered by Part 3 of the Copyright Act 1994.

Copyright Standards New Zealand

© The Crown in right of New Zealand, administered by the New Zealand Standards Executive. Access to this standard has been sponsored by the Ministry of Business, Innovation, and Employment under copyright license LN001498. You are not permitted to reproduce or distribute any part of this standard without prior written permission from Standards New Zealand, on behalf of New Zealand Standards Executive, unless your actions are covered by Part 3 of the Copyright Act 1994.

SECTION 9
POSTS

9.1 General **9**-3
9.2 Uplift: concrete volume at base **9**-3
9.3 Connections **9**-3

Table

9.1 Post concrete footings to resist uplift **9**-3
9.2 Connections to posts and beams to resist uplift **9**-4

Figure

9.1 Area of roof resisted by post **9**-4
9.2 Post/footing connections **9**-5
9.3 Beam/post connections **9**-6

Copyright Standards New Zealand

© The Crown in right of New Zealand, administered by the New Zealand Standards Executive. Access to this standard has been sponsored by the Ministry of Business, Innovation, and Employment under copyright license LN001498. You are not permitted to reproduce or distribute any part of this standard without prior written permission from Standards New Zealand, on behalf of New Zealand Standards Executive, unless your actions are covered by Part 3 of the Copyright Act 1994.

Copyright Standards New Zealand

© The Crown in right of New Zealand, administered by the New Zealand Standards Executive. Access to this standard has been sponsored by the Ministry of Business, Innovation, and Employment under copyright license LN001498. You are not permitted to reproduce or distribute any part of this standard without prior written permission from Standards New Zealand, on behalf of New Zealand Standards Executive, unless your actions are covered by Part 3 of the Copyright Act 1994.

9 POSTS

9.1 General

Amd 1 Dec '00

Isolated 100 mm x 100 mm *posts* not exceeding 3 m long may be used to support beams which directly support *rafters*. The verandah beam sizes shall be obtained from table 10.8.

9.2 Uplift: concrete volume at base

9.2.1

Amd 1 Dec '00

Where a roof is supported by *posts* and is open to wind exposure on one, two adjacent or three sides the *posts* are required to be secured against uplift. Secure each *post* against uplift by concrete *footings* complying with 9.2.2.

C9.2.1

This clause is to provide for verandah, deck or carport roofs.

9.2.2

The area of the roof supported by the *post* shall be determined from figure 9.1 and the volume of the concrete *footing* required to resist uplift shall be as given in table 9.1.

9.3 Connections

Each end of each *post* shall be provided with connections as given by table 9.2 and either figures 9.2 or 9.3 or by alternative proprietary connections of an equal or greater *capacity*.

Table 9.1 – Post concrete footings to resist uplift (see 9.2.2)

Roof type	Wind zone	Volume of footing concrete (m^3) for area of roof supported						
		1 m^2	2 m^2	4 m^2	6 m^2	8 m^2	10 m^2	12 m^2
Light	Very High	0.07	0.13	0.26	0.40	0.50	0.65	0.80
	High	0.05	0.10	0.20	0.30	0.40	0.50	0.60
	Medium	0.03	0.05	0.10	0.15	0.20	0.25	0.30
	Low	0.02	0.03	0.07	0.10	0.15	0.15	0.20
Heavy	Very High	0.04	0.07	0.13	0.20	0.26	0.32	0.40
	High	0.03	0.05	0.10	0.15	0.20	0.25	0.30
	Medium and Low	No securement for uplift required						

Copyright Standards New Zealand

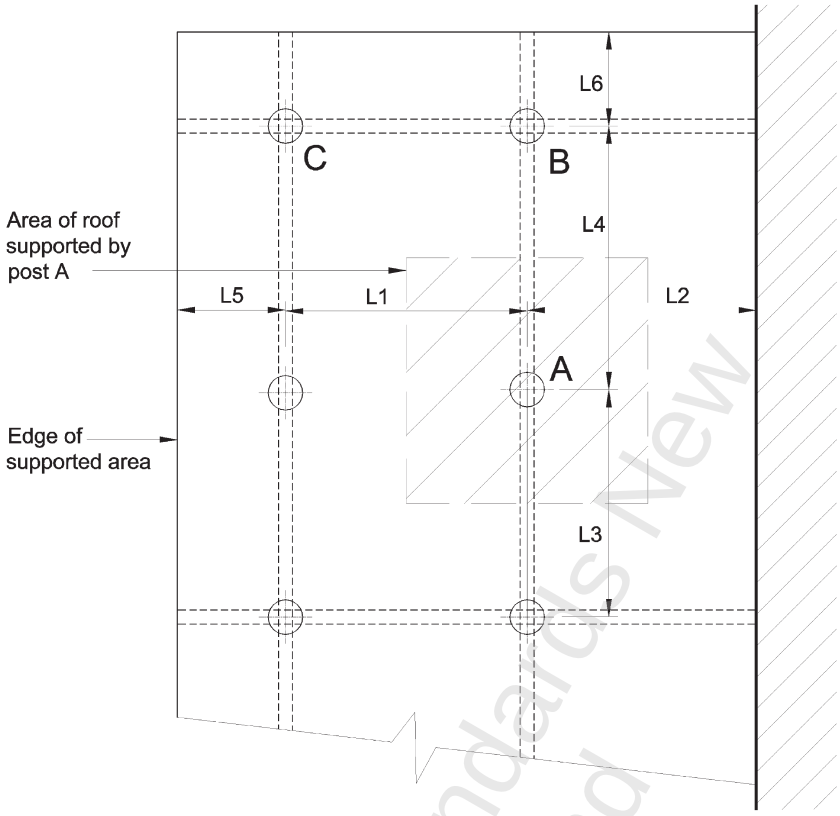

Interior post A, supported area = $\frac{L1 + L2}{2} \times \frac{L3 + L4}{2}$

Edge post B, supported area = $\frac{L1 + L2}{2} \times \left(\frac{L4 + L6}{2}\right)$

Edge post C, supported area = $\left(\frac{L1 + L5}{2}\right) \times \left(\frac{L4 + L6}{2}\right)$

Figure 9.1 – Area of roof supported by post (see 9.2.2)

Table 9.2 – Connections to posts and beams to resist uplift (see 9.3)

Roof type	Wind zone	Capacity of post and beam connections (kN) for area of roof supported						
		1 m²	2 m²	4 m²	6 m²	8 m²	10 m²	12 m²
Light	Very High	2.0	4.0	7.9	11.9	15.8	19.8	23.8
	High	1.5	2.9	5.9	8.8	11.8	14.7	17.7
	Medium	1.0	1.9	3.8	5.8	7.7	9.6	11.5
	Low	0.7	1.3	2.6	3.9	5.2	6.5	7.8
Heavy	Very High	1.6	3.2	6.5	9.7	13.0	16.2	19.4
	High	1.1	2.2	4.4	6.7	8.9	11.1	13.3
	Medium and Low	No securement for uplift required						

© The Crown in right of New Zealand, administered by the New Zealand Standards Executive. Access to this standard has been sponsored by the Ministry of Business, Innovation, and Employment under copyright license LN001498. You are not permitted to reproduce or distribute any part of this standard without prior written permission from Standards New Zealand, on behalf of New Zealand Standards Executive, unless your actions are covered by Part 3 of the Copyright Act 1994.

Copyright Standards New Zealand

© The Crown in right of New Zealand, administered by the New Zealand Standards Executive. Access to this standard has been sponsored by the Ministry of Business, Innovation, and Employment under copyright license LN001498. You are not permitted to reproduce or distribute any part of this standard without prior written permission from Standards New Zealand, on behalf of New Zealand Standards Executive, unless your actions are covered by Part 3 of the Copyright Act 1994.

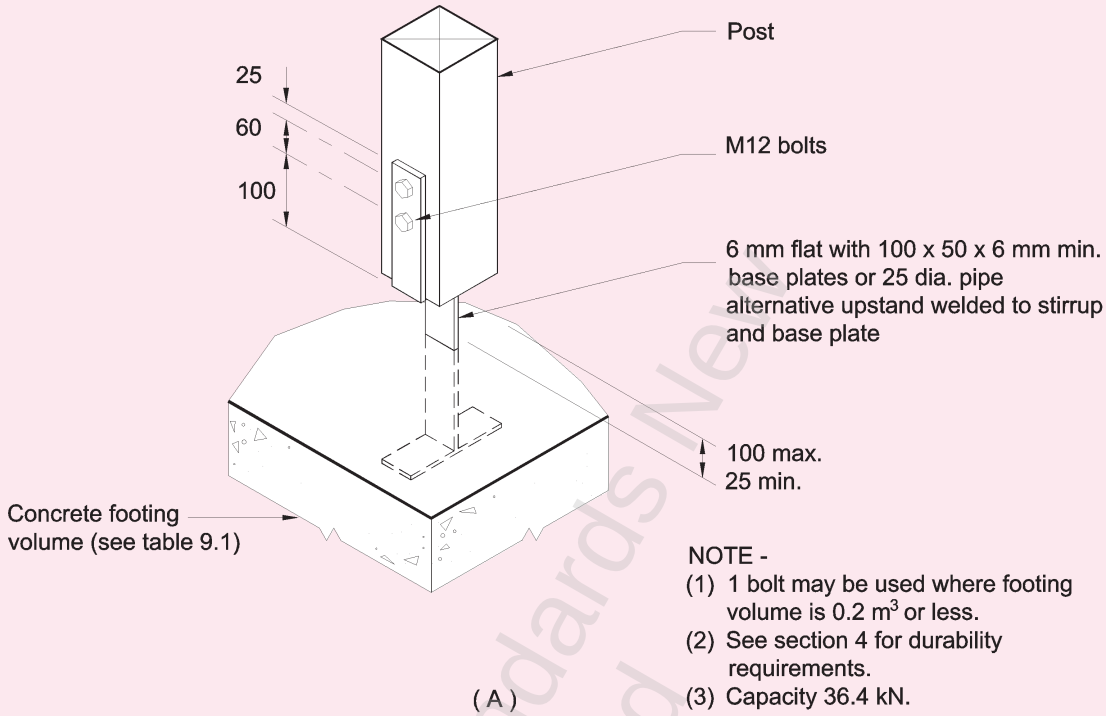

NOTE -
(1) 1 bolt may be used where footing volume is 0.2 m^3 or less.
(2) See section 4 for durability requirements.
(3) Capacity 36.4 kN.

(A)

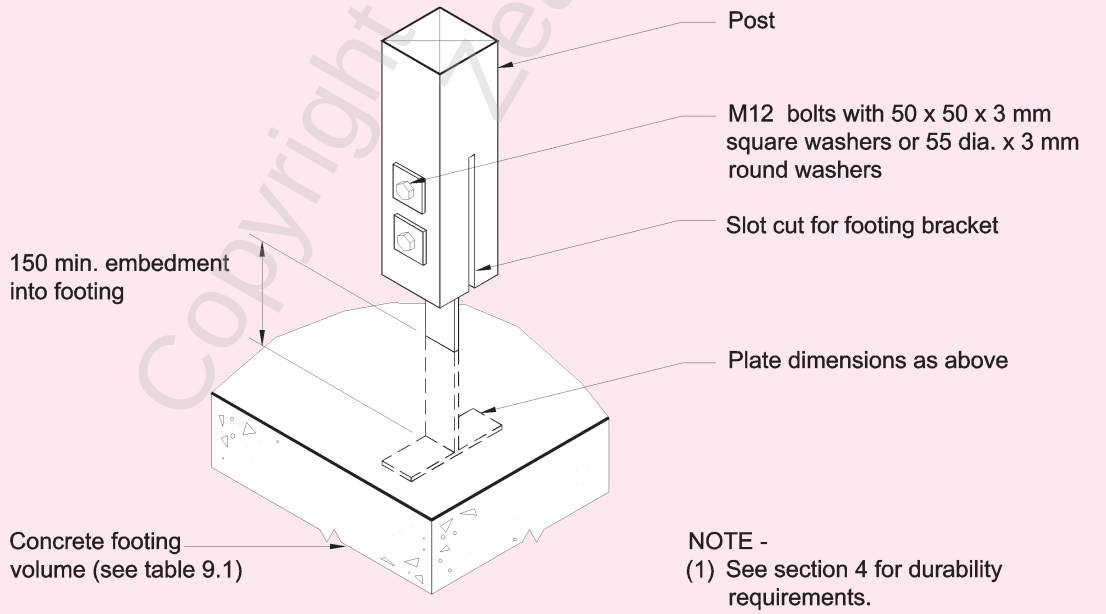

NOTE -
(1) See section 4 for durability requirements.
(2) Capacity 36.4 kN.

(B)

Figure 9.2 – Post/footing connections (see 9.3)

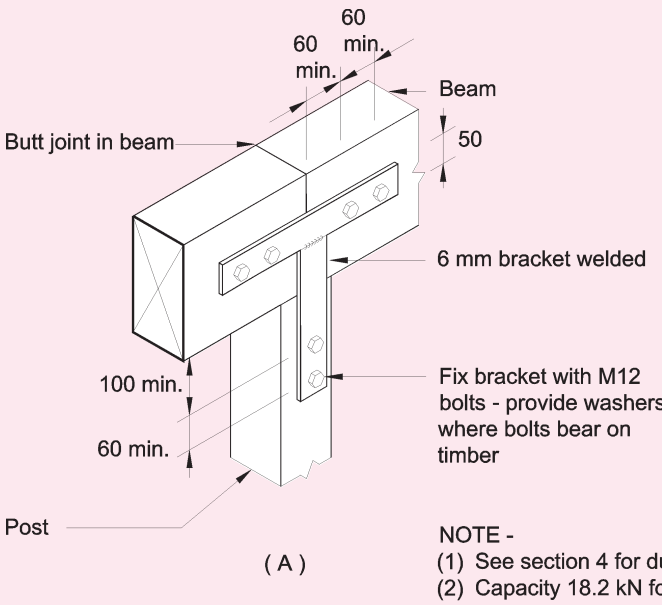

(A)

NOTE -
(1) See section 4 for durability requirements.
(2) Capacity 18.2 kN for 1 bracket.
(3) Capacity 36.4 kN for 2 brackets.

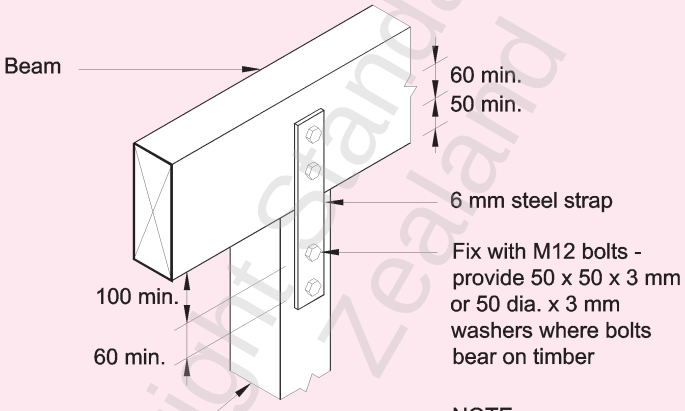

(B)

NOTE -
(1) See section 4 for durability requirements.
(2) Capacity 9.8 kN for 1 bracket.
(3) Capacity 19.5 kN for 2 brackets.

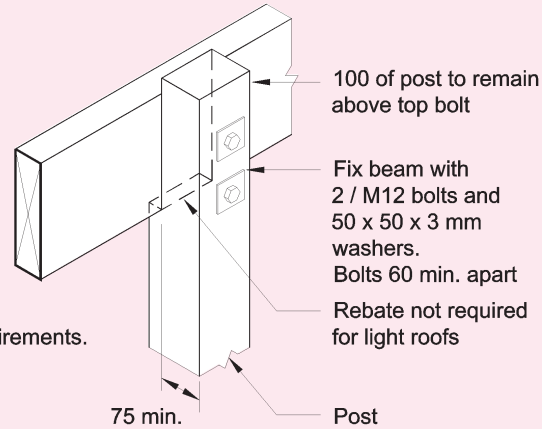

(C)

NOTE -
(1) See section 4 for durability requirements.
(2) Capacity 9.8 kN.

Figure 9.3 – Beam/post connections (see 9.3)

© The Crown in right of New Zealand, administered by the New Zealand Standards Executive. Access to this standard has been sponsored by the Ministry of Business, Innovation, and Employment under copyright license LN001498. You are not permitted to reproduce or distribute any part of this standard without prior written permission from Standards New Zealand, on behalf of New Zealand Standards Executive, unless your actions are covered by Part 3 of the Copyright Act 1994.

Copyright Standards New Zealand

© The Crown in right of New Zealand, administered by the New Zealand Standards Executive. Access to this standard has been sponsored by the Ministry of Business, Innovation, and Employment under copyright license LN001498. You are not permitted to reproduce or distribute any part of this standard without prior written permission from Standards New Zealand, on behalf of New Zealand Standards Executive, unless your actions are covered by Part 3 of the Copyright Act 1994.

SECTION 10
ROOF FRAMING

10.1 General **10**-3

10.2 Systems to resist vertical loads **10**-4

10.3 Systems to resist horizontal loads **10**-45

10.4 Roof bracing details **10**-48

10.5 Nailing schedule for roofs **10**-53

Table

10.1 Summary of roof bracing systems **10**-4

10.2 Rafters **10**-8

10.3 Key to fixing types to restrain ridge beam uplift ..... **10**-18 — Amd 1 Dec '00

10.4 Ceiling joists ..... **10**-18A — Amd 2 May '06

10.5 Ceiling runners **10**-19A

10.6 Underpurlins and ridge beams **10**-21

10.7 Maximum span and fixing types for strutting beams **10**-29

10.8 Verandah beams **10**-31

10.9 Purlins or battens **10**-36

10.10 Capacity of fixings for purlins or battens ..... **10**-37 — Amd 2 May '06

10.11 Spacing of fixings for dummy rafters for sarked roofs **10**-41

10.12 Fixing types of roof trusses at supports **10**-44

10.13 Key to fixing types and capacity for rafters, roof trusses, underpurlins and ridge beams **10**-44

10.14 Nailing schedule for hand driven and power driven nails **10**-54

Figure

10.1 Roof framing members, couple-close roof **10**-5

10.2 Jointing hip rafters and ridge boards **10**-6

10.3 Rafter spans **10**-7

10.4 Seating of rafters ..... **10**-14C — Amd 2 May '06

Copyright Standards New Zealand

© The Crown in right of New Zealand, administered by the New Zealand Standards Executive. Access to this standard has been sponsored by the Ministry of Business, Innovation, and Employment under copyright license LN001498. You are not permitted to reproduce or distribute any part of this standard without prior written permission from Standards New Zealand, on behalf of New Zealand Standards Executive, unless your actions are covered by Part 3 of the Copyright Act 1994.

Figure (continued)

10.5 **Rafter to ridge beam connections** **10**-15

10.6 **Fixing rafters – Skillion roof** **10**-16

10.7 **Fixing ridge beam to wall** **10**-17

10.8 **Joints in ceiling joists** **10**-19

10.9 **Ceiling runners** **10**-20

10.10 **Underpurlin struts – Single** **10**-26

10.11 **Underpurlin struts – Paired** **10**-27

10.12 **Strutting beams** **10**-28

10.13 **Collar ties and underpurlins – Roof pitches greater than 10°** **10**-33

10.14 **Fixing cleats** **10**-33

10.15 **Gable verge framing** **10**-34

10.16 **Gable roof showing higher wind uplift areas requiring extra purlin and batten fixings** **10**-37

10.17 **Hip and valley roof showing higher wind uplift areas requiring extra purlin and batten fixings** **10**-38

10.18 **Purlins fixed directly to rafters** **10**-39

10.19 **Fixing purlins and dummy rafters to skillion roofs** **10**-39

10.20 **Fixing purlins and dummy rafters to sarked roofs** **10**-40

10.21 **Truss/top plate connections** **10**-43

10.22 **Bracing of heavy hip roofs** **10**-46

10.23 **Ceiling braces connecting hip-end top plates to wall bracing elements** **10**-47

10.24 **Bracing of heavy gable roofs** **10**-48

10.25 **Roof plane diagonal brace – Timber** **10**-50

10.26 **Roof space brace – Alternative fixings** **10**-51

10.27 **Sheet sarked roof** **10**-53

Copyright Standards New Zealand

© The Crown in right of New Zealand, administered by the New Zealand Standards Executive. Access to this standard has been sponsored by the Ministry of Business, Innovation, and Employment under copyright license LN001498. You are not permitted to reproduce or distribute any part of this standard without prior written permission from Standards New Zealand, on behalf of New Zealand Standards Executive, unless your actions are covered by Part 3 of the Copyright Act 1994.

10 ROOF FRAMING

10.1 General

10.1.1 *Scope*

The scope of this section is as follows:

(a) This section includes trussed roofs, framed roofs and their *bracing* requirements;

(b) This section does not include design for snow loads which can be found in section 15;

(c) This section does not include any *flat roof* with access for fire escape, roof garden, light storage, or general pedestrian traffic, and any *flat roof* where people can be expected to congregate on occasions, irrespective of the ease of access. These shall be assessed as a floor with a 2 kPa *floor load* for the purposes of this Standard;

(d) This section shall not be used for roofs with slopes less than 3°.

10.1.2 *Roof system*

The roof system shall consist of:

(a) A system to resist vertical *loads* complying with 10.1.3; combined with

(b) A system to resist horizontal *loads* complying with 10.1.4.

10.1.3 *Vertical loads*

The system to resist vertical *loads* shall consist of a combination of:

(a) Roof *framing* members complying with 10.2.1; and

(b) Roof trusses complying with 10.2.2.

10.1.4 *Horizontal loads*

For both trussed and framed roofs, the system to resist horizontal *loads* shall consist of roof *bracing* complying with 10.3 and 10.4 (see table 10.1).

10.1.5 *Concrete or concrete masonry walls in roof spaces*

10.1.5.1

Where a concrete or concrete masonry wall extends above or to the underside of roof *cladding*, roof *framing* shall be supported on 90 mm x 45 mm *stringers* or *bearers,* fixed to the side of the wall, with M12 bolts at not more than 1.4 m centres. Alternative fixings to the M12 bolt shall comply with 2.4.7.

10.1.5.2

Where the wall is required to provide a fire separation, the anchorages for these bolts shall not extend through the wall, or reduce the fire integrity rating of the wall.

Copyright Standards New Zealand

© The Crown in right of New Zealand, administered by the New Zealand Standards Executive. Access to this standard has been sponsored by the Ministry of Business, Innovation, and Employment under copyright license LN001498. You are not permitted to reproduce or distribute any part of this standard without prior written permission from Standards New Zealand, on behalf of New Zealand Standards Executive, unless your actions are covered by Part 3 of the Copyright Act 1994.

10.2 Systems to resist vertical loads

10.2.1 *Framed roofs*

10.2.1.1 *Scope*

The scope of this clause is as follows:

(a) Clause 10.2.1 is written specifically for *couple-close roofs* (see figures 10.1 and 10.3), but the requirements for individual roof *framing* members apply equally to framed roofs of other types; for example, mono-pitch skillion and exposed *rafter* roofs.

(b) This clause does not include "cathedral ceiling" type roofs (see figure 10.3);

(c) The *rafter spacing* shall not exceed 1200 mm for *light roofs*, and 900 mm for *heavy roofs*.

Copyright Standards New Zealand

Table 10.1 – Summary of roof bracing systems (see 10.1.4)

Roof type	Roof plane diagonal braces unless sarked (see 10.4)		Roof space diagonal braces*	Hip or valley rafters		Hip and top plate
Light hip	–	–	–	Minimum 3 per ridge	–	–
Heavy hip	One per 35 m^2 roof plane plan area	Plus	–	Minimum 3 per ridge	Plus	Top plate connected at 2.5 m maximum centres to wall bracing elements (see figure 10.22)
Light gable	One per 50 m^2 roof plane plan area	Or	At each end of ridge and maximum 7.5 m centres between	–	–	–
Heavy gable	One per 25 m^2 roof plane plan area, minimum 2 per plane	Plus	One per 12 m^2 roof plane plan area, parallel to ridge but not less than 2 m from a parallel external wall	–	–	–
* Sometimes known as ridge braces or gable braces.						

NOTE –

(1) Roofs with hip and valley rafters shall have at least 3 hips or valleys connected to the ridge and top plates (refer to 10.3).

(2) Additional hip and valley rafters shall be counted as roof plane braces.

© The Crown in right of New Zealand, administered by the New Zealand Standards Executive. Access to this standard has been sponsored by the Ministry of Business, Innovation, and Employment under copyright license LN001498. You are not permitted to reproduce or distribute any part of this standard without prior written permission from Standards New Zealand, on behalf of New Zealand Standards Executive, unless your actions are covered by Part 3 of the Copyright Act 1994.

10.2.1.2 ***Joints in roof framing members***

10.2.1.2.1
Joints in all roof *framing* members, other than *ridge boards* shall be made only over supports.

C10.2.1.2.1
All roof framing members should as far as possible be in continuous lengths.

10.2.1.2.2
Joints shall not be made at a support beyond which a *framing* member is cantilevered.

10.2.1.2.3
Joints in *hip rafters* and *ridge boards* shall be made by a connector of 3 kN *capacity* in tension or compression along the line of the members. This may be achieved by butting and flitching with timber 19 mm thick extending not less than 225 mm on each side on the joint (see figure 10.2).

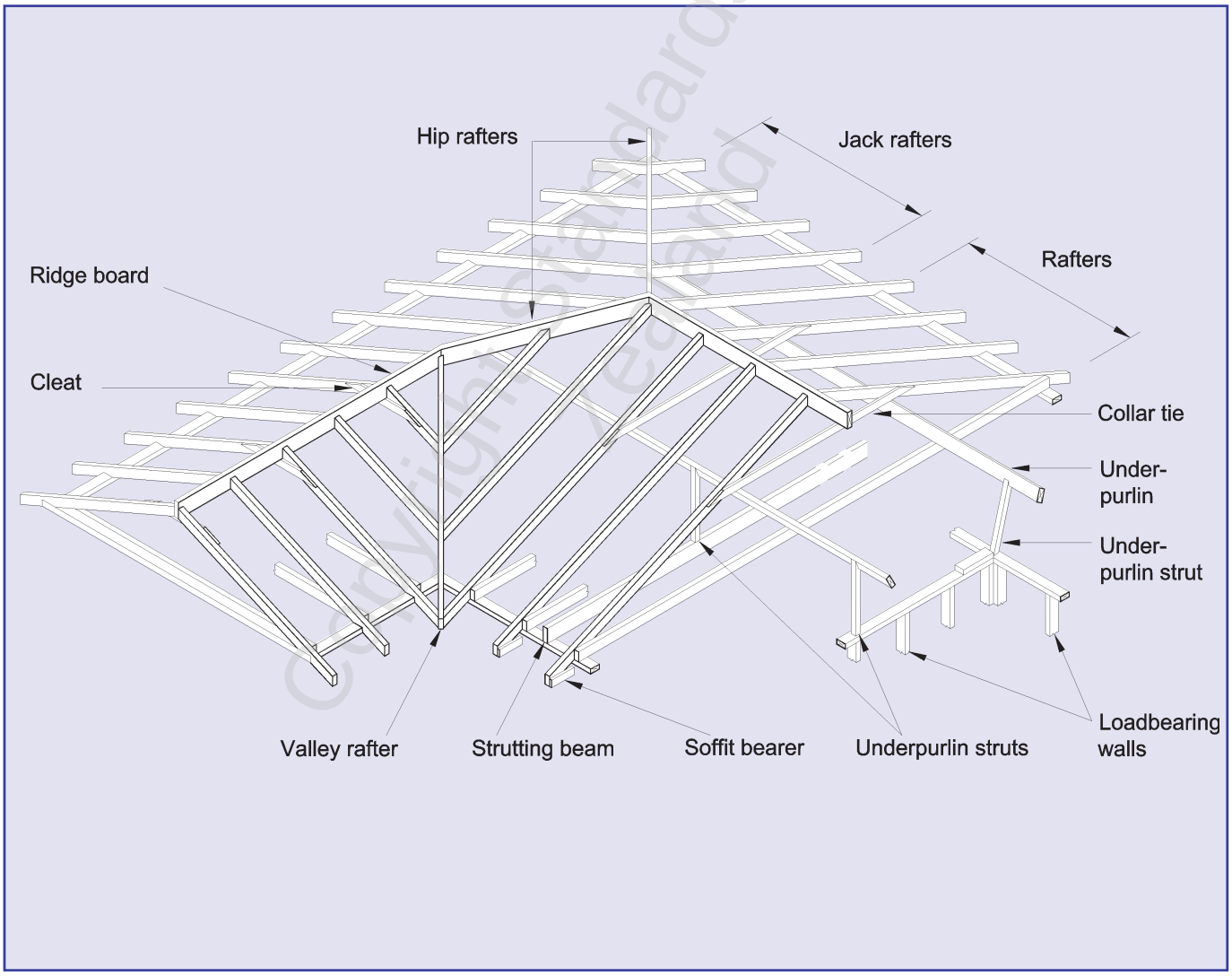

Figure 10.1 – Roof framing members, couple-close roof (see 10.2.1.1)

© The Crown in right of New Zealand, administered by the New Zealand Standards Executive. Access to this standard has been sponsored by the Ministry of Business, Innovation, and Employment under copyright license LN001498. You are not permitted to reproduce or distribute any part of this standard without prior written permission from Standards New Zealand, on behalf of New Zealand Standards Executive, unless your actions are covered by Part 3 of the Copyright Act 1994.

10.2.1.3 ***Rafters***

10.2.1.3.1
Rafters (including hip and *valley rafters*) shall span between any 2 of the following:

(a) *Ridge board*;

(b) *Underpurlin*;

(c) *Top plate*;

(d) *Lintel*, *ridge beam*, or *stringer*;

(e) Another *rafter*.

Refer to figure 10.3 for definition of *rafter* spans.

10.2.1.3.2
Rafter and *valley rafter* dimensions and fixing types shall be as given by table 10.2 (see table 15.6 for snow loads). *Couple-close roofs* shall have ceiling *joists* fixed to each *rafter*. Amd 1 Dec '00

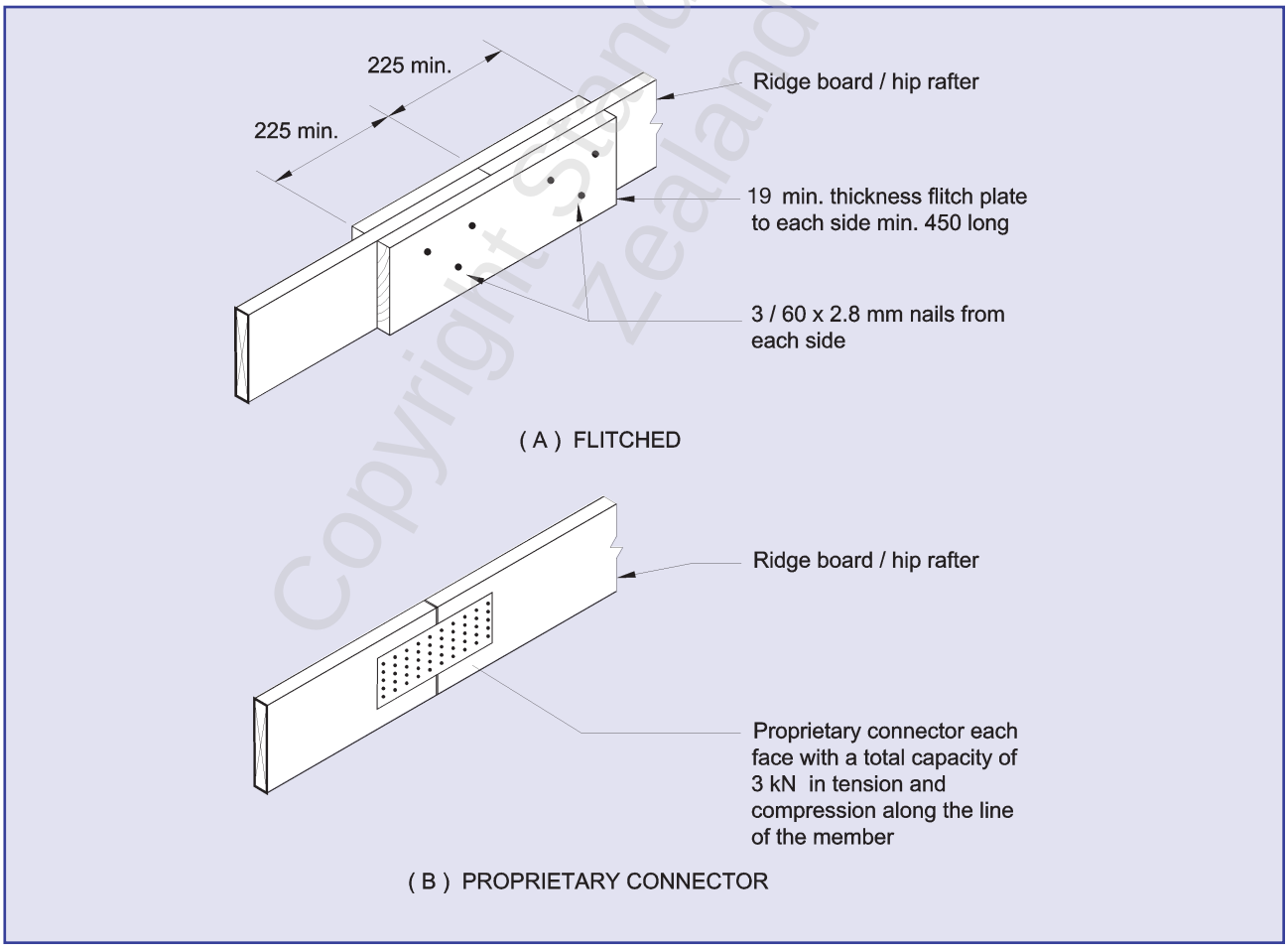

Figure 10.2 – Jointing hip rafters and ridge boards (see 10.2.1.2.3)

© The Crown in right of New Zealand, administered by the New Zealand Standards Executive. Access to this standard has been sponsored by the Ministry of Business, Innovation, and Employment under copyright license LN001498. You are not permitted to reproduce or distribute any part of this standard without prior written permission from Standards New Zealand, on behalf of New Zealand Standards Executive, unless your actions are covered by Part 3 of the Copyright Act 1994.

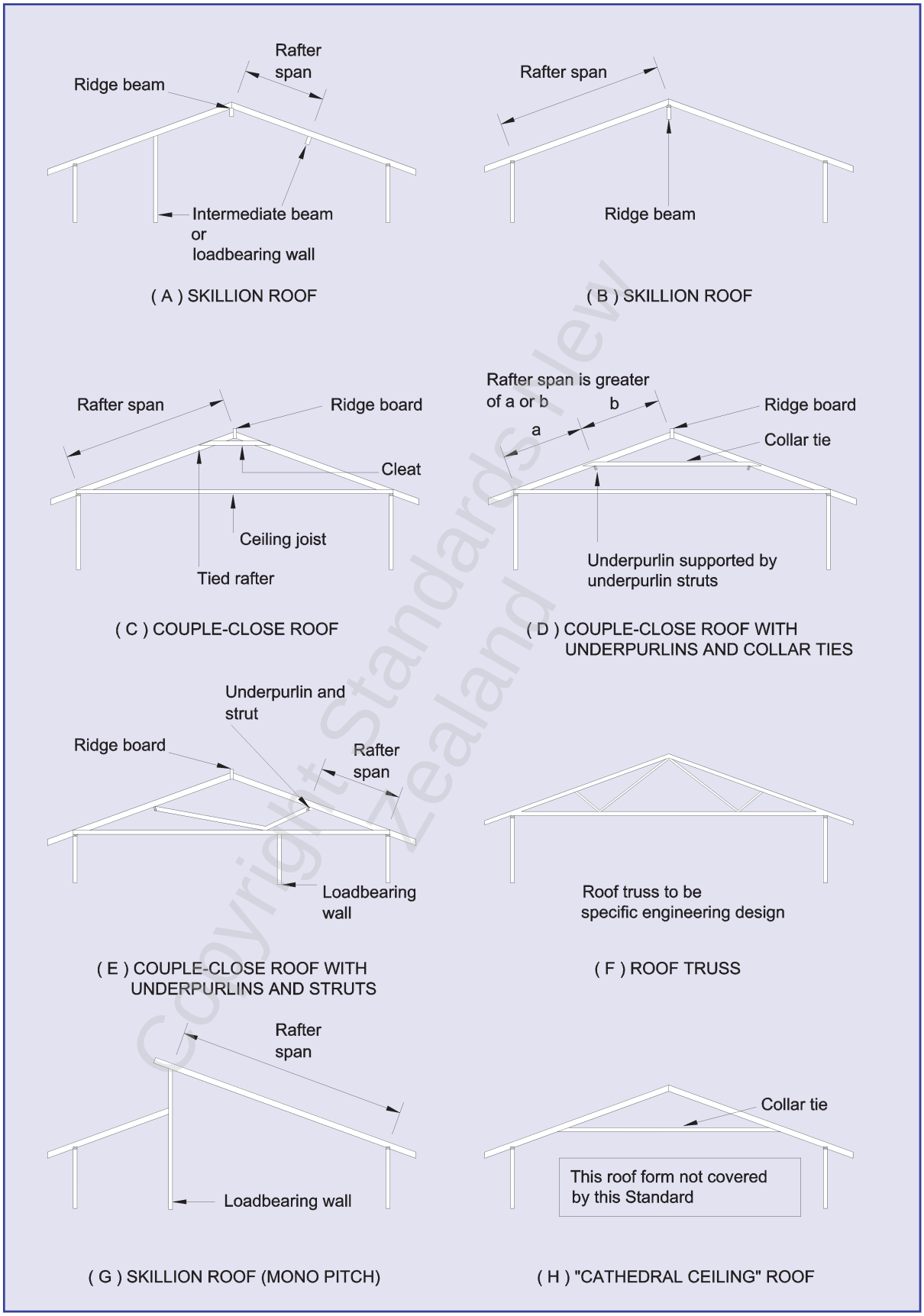

Figure 10.3 – Rafter spans (see 10.2.1.3.1)

Copyright Standards New Zealand

© The Crown in right of New Zealand, administered by the New Zealand Standards Executive. Access to this standard has been sponsored by the Ministry of Business, Innovation, and Employment under copyright license LN001498. You are not permitted to reproduce or distribute any part of this standard without prior written permission from Standards New Zealand, on behalf of New Zealand Standards Executive, unless your actions are covered by Part 3 of the Copyright Act 1994.

Table 10.2 – Rafters (see 10.2.1.3.2) **– No. 1 Framing and MSG 6**

(a) Light roof for low wind zone

Rafter size (Width x thickness)	Rafter spacing (mm)					
	600		900		1200	
	Rafter span	Fixing type	Rafter span	Fixing type	Rafter span	Fixing type
(mm x mm)	(m)		(m)		(m)	
70 x 35	1.6	A	1.4	A	1.2	A
90 x 35	2.0	A	1.8	A	1.6	A
140 x 35	3.1	A	2.6	B	2.4	B
70 x 45	1.7	A	1.5	A	1.4	A
90 x 45	2.2	A	1.9	A	1.8	A
140 x 45	3.5	A	3.0	B	2.8	B
190 x 45	4.4	B	3.8	B	3.4	B
240 x 45	4.7	B	4.1	B	3.7	B
290 x 45	5.0	B	4.4	B	4.0	B
90 x 70	2.6	A	2.3	A	2.0	B
140 x 70	4.0	B	3.5	B	3.2	B
190 x 70	5.5	B	4.8	B	4.4	B
240 x 70	7.0	B	6.1	B	5.5	B
290 x 70	7.9	B	6.9	B	6.2	B

Fixing type	Fixing to resist uplift	Alternative fixing capacity (kN)
A	2/100 x 3.75 skewed nails	0.7
B	2/100 x 3.75 skewed nails + 1 wire dog	2.7

NOTE –

(1) Rafter spans may be increased by 10 % for rafters continuous over 2 or more spans that have not been birdsmouthed at intermediate supports.

(2) Fixing types at intermediate supports for rafters running continuously over those supports shall have double the capacity of the fixing types given in this table.

(3) For the full range of fixing types and capacity see table 10.13.

(4) Members 70 mm and 90 mm thick may be substituted with built-up members sized and nailed in accordance with 2.4.4.7.

Amd 2
May '06

Copyright Standards New Zealand

© The Crown in right of New Zealand, administered by the New Zealand Standards Executive. Access to this standard has been sponsored by the Ministry of Business, Innovation, and Employment under copyright license LN001498. You are not permitted to reproduce or distribute any part of this standard without prior written permission from Standards New Zealand, on behalf of New Zealand Standards Executive, unless your actions are covered by Part 3 of the Copyright Act 1994.

Table 10.2 – Rafters (continued) (see 10.2.1.3.2) **– No. 1 Framing and MSG 6**

(b) Light roof for medium wind zone

Rafter size (Width x thickness)	Rafter spacing (mm)					
	600		900		1200	
	Rafter span	Fixing type	Rafter span	Fixing type	Rafter span	Fixing type
(mm x mm)	(m)		(m)		(m)	
70 x 35	1.5	A	1.3	A	1.2	A
90 x 35	1.9	A	1.7	A	1.5	B
140 x 35	2.7	A	2.4	B	2.1	B
70 x 45	1.6	A	1.4	A	1.3	A
90 x 45	2.1	A	1.8	A	1.6	B
140 x 45	3.3	B	2.9	B	2.6	B
190 x 45	3.9	B	3.4	B	3.1	B
240 x 45	4.2	B	3.7	B	3.3	B
290 x 45	4.5	B	3.9	B	3.6	B
90 x 70	2.4	A	2.1	B	1.9	B
140 x 70	3.8	B	3.3	B	3.0	B
190 x 70	5.2	B	4.5	B	4.1	B
240 x 70	6.5	B	5.7	B	5.2	B
290 x 70	7.0	B	6.1	B	5.5	C

Fixing type	Fixing to resist uplift	Alternative fixing capacity (kN)
A	2/100 x 3.75 skewed nails	0.7
B	2/100 x 3.75 skewed nails + 1 wire dog	2.7
C	2/100 x 3.75 skewed nails + 2 wire dogs	4.7

NOTE –

(1) Rafter spans may be increased by 10 % for rafters continuous over 2 or more spans that have not been birdsmouthed at intermediate supports.

(2) Fixing types at intermediate supports for rafters running continuously over those supports shall have double the capacity of the fixing types given in this table.

(3) For the full range of fixing types and capacity see table 10.13.

(4) Members 70 mm and 90 mm thick may be substituted with built-up members sized and nailed in accordance with 2.4.4.7.

Amd 2 May '06

Copyright Standards New Zealand

© The Crown in right of New Zealand, administered by the New Zealand Standards Executive. Access to this standard has been sponsored by the Ministry of Business, Innovation, and Employment under copyright license LN001498. You are not permitted to reproduce or distribute any part of this standard without prior written permission from Standards New Zealand, on behalf of New Zealand Standards Executive, unless your actions are covered by Part 3 of the Copyright Act 1994.

Table 10.2 – Rafters (continued) (see 10.2.1.3.2) **– No. 1 Framing and MSG 6**

(c) Light roof for high wind zone

Rafter size (Width x thickness)	Rafter spacing (mm)					
	600		900		1200	
	Rafter span	Fixing type	Rafter span	Fixing type	Rafter span	Fixing type
(mm x mm)	(m)		(m)		(m)	
70 x 35	1.3	A	–	–	–	–
90 x 35	1.7	A	1.4	B	1.3	B
140 x 35	2.4	B	2.1	B	1.8	B
70 x 45	1.4	A	1.2	A	–	–
90 x 45	1.8	A	1.6	B	1.4	B
140 x 45	2.8	B	2.5	B	2.2	B
190 x 45	3.4	B	3.0	B	2.7	B
240 x 45	3.7	B	3.2	B	2.9	B
290 x 45	4.0	B	3.5	B	3.1	B
90 x 70	2.1	B	1.8	B	1.7	B
140 x 70	3.3	B	2.9	B	2.6	B
190 x 70	4.5	B	3.9	B	3.6	B
240 x 70	5.7	B	5.0	B	4.5	C
290 x 70	6.2	B	5.4	C	4.9	C

Fixing type	Fixing to resist uplift	Alternative fixing capacity (kN)
A	2/100 x 3.75 skewed nails	0.7
B	2/100 x 3.75 skewed nails + 1 wire dog	2.7
C	2/100 x 3.75 skewed nails + 2 wire dogs	4.7

NOTE –

(1) Rafter spans may be increased by 10 % for rafters continuous over 2 or more spans that have not been birdsmouthed at intermediate supports.

(2) Fixing types at intermediate supports for rafters running continuously over those supports shall have double the capacity of the fixing types given in this table.

(3) For the full range of fixing types and capacity see table 10.13.

(4) Members 70 mm and 90 mm thick may be substituted with built-up members sized and nailed in accordance with 2.4.4.7.

Amd 2
May '06

Copyright Standards New Zealand

© The Crown in right of New Zealand, administered by the New Zealand Standards Executive. Access to this standard has been sponsored by the Ministry of Business, Innovation, and Employment under copyright license LN001498. You are not permitted to reproduce or distribute any part of this standard without prior written permission from Standards New Zealand, on behalf of New Zealand Standards Executive, unless your actions are covered by Part 3 of the Copyright Act 1994.

Table 10.2 – Rafters (continued) (see 10.2.1.3.2) **– No. 1 Framing and MSG 6**

(d) Light roof for very high wind zone

Rafter size (Width x thickness)	Rafter spacing (mm)					
	600		900		1200	
	Rafter span	Fixing type	Rafter span	Fixing type	Rafter span	Fixing type
(mm x mm)	(m)		(m)		(m)	
70 x 35	1.2	A	–	–	–	–
90 x 35	1.5	B	1.3	B	1.2	B
140 x 35	2.2	B	1.9	B	1.7	B
70 x 45	1.3	A	–	–	–	–
90 x 45	1.6	B	1.4	B	1.3	B
140 x 45	2.6	B	2.2	B	2.0	B
190 x 45	3.1	B	2.7	B	2.4	B
240 x 45	3.4	B	2.9	B	2.7	B
290 x 45	3.6	B	3.1	B	2.9	C
90 x 70	1.9	B	1.7	B	1.5	B
140 x 70	3.0	B	2.6	B	2.4	B
190 x 70	4.1	B	3.6	B	3.2	C
240 x 70	5.2	B	4.5	C	4.1	C
290 x 70	5.6	B	4.9	C	4.4	C

Fixing type	Fixing to resist uplift	Alternative fixing capacity (kN)
A	2/100 x 3.75 skewed nails	0.7
B	2/100 x 3.75 skewed nails + 1 wire dog	2.7
C	2/100 x 3.75 skewed nails + 2 wire dogs	4.7

NOTE –

(1) Rafter spans may be increased by 10 % for rafters continuous over 2 or more spans that have not been birdsmouthed at intermediate supports.

(2) Fixing types at intermediate supports for rafters running continuously over those supports shall have double the capacity of the fixing types given in this table.

(3) For the full range of fixing types and capacity see table 10.13.

Amd 2 May '06

(4) Members 70 mm and 90 mm thick may be substituted with built-up members sized and nailed in accordance with 2.4.4.7.

Copyright Standards New Zealand

© The Crown in right of New Zealand, administered by the New Zealand Standards Executive. Access to this standard has been sponsored by the Ministry of Business, Innovation, and Employment under copyright license LN001498. You are not permitted to reproduce or distribute any part of this standard without prior written permission from Standards New Zealand, on behalf of New Zealand Standards Executive, unless your actions are covered by Part 3 of the Copyright Act 1994.

Table 10.2 – Rafters (continued) (see 10.2.1.3.2) **– No. 1 Framing and MSG 6**

(e) Heavy roof for low and medium wind zones

Rafter size (Width x thickness)	Rafter spacing (mm)								
	480			600			900		
	Rafter span	Fixing type		Rafter span	Fixing type		Rafter span	Fixing type	
(mm x mm)	(m)	L	M	(m)	L	M	(m)	L	M
70 x 35	1.2	A	A	–	–	–	–	–	–
90 x 35	1.5	A	A	1.4	A	A	1.2	A	A
140 x 35	2.4	A	A	2.2	A	A	1.9	A	A
70 x 45	1.3	A	A	1.2	A	A	–	–	–
90 x 45	1.6	A	A	1.5	A	A	1.3	A	A
140 x 45	2.6	A	A	2.4	A	A	2.1	A	A
190 x 45	3.5	A	A	3.3	A	A	2.9	A	B
240 x 45	4.5	A	A	4.2	A	A	3.6	A	B
290 x 45	5.4	A	B	5.0	A	B	4.4	A	B
90 x 70	1.9	A	A	1.8	A	A	1.5	A	A
140 x 70	3.0	A	A	2.8	A	A	2.4	A	A
190 x 70	4.1	A	A	3.8	A	A	3.3	A	B
240 x 70	5.2	B	B	4.8	B	B	4.2	B	B
290 x 70	6.3	B	B	5.8	B	B	5.1	B	C

Fixing type	Fixing to resist uplift	Alternative fixing capacity (kN)
A	2/100 x 3.75 skewed nails	0.7
B	2/100 x 3.75 skewed nails + 1 wire dog	2.7
C	2/100 x 3.75 skewed nails + 2 wire dogs	4.7

NOTE –

(1) Rafter spans may be increased by 10 % for rafters continuous over 2 or more spans that have not been birdsmouthed at intermediate supports.

(2) Fixing types at intermediate supports for rafters running continuously over those supports shall have double the capacity of the fixing types given in this table.

(3) For the full range of fixing types and capacity see table 10.13.

(4) Members 70 mm and 90 mm thick may be substituted with built-up members sized and nailed in accordance with 2.4.4.7.

Amd 2
May '06

Copyright Standards New Zealand

© The Crown in right of New Zealand, administered by the New Zealand Standards Executive. Access to this standard has been sponsored by the Ministry of Business, Innovation, and Employment under copyright license LN001498. You are not permitted to reproduce or distribute any part of this standard without prior written permission from Standards New Zealand, on behalf of New Zealand Standards Executive, unless your actions are covered by Part 3 of the Copyright Act 1994.

Table 10.2 – Rafters (continued) (see 10.2.1.3.2) **– No. 1 Framing and MSG 6**

(f) Heavy roof for high and very high wind zones

Rafter size (Width x thickness)	Rafter spacing (mm)								
	480			600			900		
	Rafter span	Fixing type		Rafter span	Fixing type		Rafter span	Fixing type	
(mm x mm)	(m)	H	VH	(m)	H	VH	(m)	H	VH
70 x 35	1.2	A	A	–	–	–	–	–	–
90 x 35	1.5	A	A	1.4	A	A	1.2	A	B
140 x 35	2.4	A	B	2.2	A	B	1.9	B	B
70 x 45	1.3	A	A	1.2	A	A	–	–	–
90 x 45	1.6	A	A	1.5	A	A	1.3	A	B
140 x 45	2.6	A	B	2.4	A	B	2.1	B	B
190 x 45	3.5	B	B	3.3	B	B	2.9	B	B
240 x 45	3.9	B	B	3.6	B	B	3.1	B	B
290 x 45	4.7*	B	–	4.3*	B	–	3.8*	B	–
290 x 45	4.2†	–	B	3.9†	–	B	3.4†	–	B
90 x 70	1.9	A	A	1.8	A	B	1.5	A	B
140 x 70	3.0	A	B	2.8	B	B	2.4	B	B
190 x 70	4.1	B	B	3.8	B	B	3.3	B	B
240 x 70	5.2	B	B	4.8	B	B	4.2	B	B
290 x 70	6.3	B	B	5.8	B	B	5.1	B	C

* High wind zone
† Very high wind zone

Fixing type	Fixing to resist uplift	Alternative fixing capacity (kN)
A	2/100 x 3.75 skewed nails	0.7
B	2/100 x 3.75 skewed nails + 1 wire dog	2.7
C	2/100 x 3.75 skewed nails + 2 wire dogs	4.7

NOTE –
(1) Rafter spans may be increased by 10 % for rafters continuous over 2 or more spans that have not been birdsmouthed at intermediate supports.
(2) Fixing types at intermediate supports for rafters running continuously over those supports shall have double the capacity of the fixing types given in this table.
(3) For the full range of fixing types and capacity see table 10.13.
(4) Members 70 mm and 90 mm thick may be substituted with built-up members sized and nailed in accordance with 2.4.4.7.

Amd 2
May '06

Copyright Standards New Zealand

© The Crown in right of New Zealand, administered by the New Zealand Standards Executive. Access to this standard has been sponsored by the Ministry of Business, Innovation, and Employment under copyright license LN001498. You are not permitted to reproduce or distribute any part of this standard without prior written permission from Standards New Zealand, on behalf of New Zealand Standards Executive, unless your actions are covered by Part 3 of the Copyright Act 1994.

Table 10.2 – Rafters (continued) (see 10.2.1.3.2) **– No. 1 Framing and MSG 6**

(g) Dimensions for valley rafters for all wind zones

Rafter size (Width x thickness)	Maximum span of valley rafters (m) and their fixing types for all wind zones			
	Light roof		Heavy roof	
	Rafter span	Fixing type	Rafter span	Fixing type
(mm x mm)	(m)		(m)	
70 x 35	1.2	B	–	–
90 x 35	1.4	B	1.3	B
140 x 35	2.0	B	1.9	B
70 x 45	1.2	B	1.2	B
90 x 45	1.5	B	1.4	B
140 x 45	2.1	B	2.0	B
190 x 45	2.7	B	2.5	B
240 x 45	3.2	B	3.0	B
290 x 45	3.7	C	3.5	B
90 x 70	1.7	B	1.6	B
140 x 70	2.4	B	2.2	B
190 x 70	3.0	B	2.8	B
240 x 70	3.6	C	3.4	B
290 x 70	4.1	C	3.9	B

Fixing type	Fixing to resist uplift	Alternative fixing capacity (kN)
B	2/100 x 3.75 skewed nails + 1 wire dog	2.7
C	2/100 x 3.75 skewed nails + 2 wire dogs	4.7

NOTE –

(1) For the full range of fixing types and capacity see table 10.13.

(2) Proprietary fixings that have the required fxing capacity indicated in tables may be used.

(3) Members 70 mm and 90 mm thick may be substituted with built-up members sized and nailed in accordance with 2.4.4.7.

Amd 2
May '06

Copyright Standards New Zealand

© The Crown in right of New Zealand, administered by the New Zealand Standards Executive. Access to this standard has been sponsored by the Ministry of Business, Innovation, and Employment under copyright license LN001498. You are not permitted to reproduce or distribute any part of this standard without prior written permission from Standards New Zealand, on behalf of New Zealand Standards Executive, unless your actions are covered by Part 3 of the Copyright Act 1994.

Table 10.2 – Rafters (see 10.2.1.3.2) **– VSG 8 and MSG 8**

(a) Light roof for low wind zone

Rafter size (Width x thickness)	Rafter spacing (mm)					
	600		900		1200	
	Rafter span	Fixing type	Rafter span	Fixing type	Rafter span	Fixing type
(mm x mm)	(m)		(m)		(m)	
70 x 35	1.7	A	1.5	A	1.4	A
90 x 35	2.3	A	2.0	A	1.8	A
140 x 35	3.4	A	3.0	B	2.7	B
70 x 45	1.9	A	1.7	A	1.5	A
90 x 45	2.5	A	2.1	A	1.9	A
140 x 45	3.9	A	3.4	B	3.1	B
190 x 45	4.9	B	4.3	B	3.9	B
240 x 45	5.3	B	4.6	B	4.2	B
290 x 45	5.7	B	4.9	B	4.5	B
90 x 70	2.9	A	2.5	A	2.3	B
140 x 70	4.5	B	3.9	B	3.5	B
190 x 70	6.1	B	5.3	B	4.8	B
240 x 70	7.7	B	6.7	B	6.1	B
290 x 70	8.8	B	7.7	B	7.0	B

Fixing type	Fixing to resist uplift	Alternative fixing capacity (kN)
A	2/100 x 3.75 skewed nails	0.7
B	2/100 x 3.75 skewed nails + 1 wire dog	2.7

NOTE –

(1) Rafter spans may be increased by 10 % for rafters continuous over 2 or more spans that have not been birdsmouthed at intermediate supports.

(2) Fixing types at intermediate supports for rafters running continuously over those supports shall have double the capacity of the fixing types given in this table.

(3) For the full range of fixing types and capacity see table 10.13.

Amd 2 May '06

(4) Members 70 mm and 90 mm thick may be substituted with built-up members sized and nailed in accordance with 2.4.4.7.

Copyright Standards New Zealand

© The Crown in right of New Zealand, administered by the New Zealand Standards Executive. Access to this standard has been sponsored by the Ministry of Business, Innovation, and Employment under copyright license LN001498. You are not permitted to reproduce or distribute any part of this standard without prior written permission from Standards New Zealand, on behalf of New Zealand Standards Executive, unless your actions are covered by Part 3 of the Copyright Act 1994.

Table 10.2 – Rafters (continued) (see 10.2.1.3.2) **– VSG 8 and MSG 8**

(b) Light roof for medium wind zone

Rafter size (Width x thickness)	Rafter spacing (mm)					
	600		900		1200	
	Rafter span	Fixing type	Rafter span	Fixing type	Rafter span	Fixing type
(mm x mm)	(m)		(m)		(m)	
70 x 35	1.6	A	1.4	A	1.3	A
90 x 35	2.1	A	1.8	A	1.7	B
140 x 35	3.1	B	2.7	B	2.4	B
70 x 45	1.8	A	1.6	A	1.4	B
90 x 45	2.3	A	2.0	B	1.8	B
140 x 45	3.6	B	3.2	B	2.9	B
190 x 45	4.4	B	3.8	B	3.4	B
240 x 45	4.7	B	4.1	B	3.7	B
290 x 45	5.1	B	4.4	B	4.0	B
90 x 70	2.7	A	2.3	B	2.1	B
140 x 70	4.2	B	3.7	B	3.3	B
190 x 70	5.7	B	5.0	B	4.5	B
240 x 70	7.2	B	6.3	B	5.7	C
290 x 70	7.9	B	6.9	B	6.2	C

Fixing type	Fixing to resist uplift	Alternative fixing capacity (kN)
A	2/100 x 3.75 skewed nails	0.7
B	2/100 x 3.75 skewed nails + 1 wire dog	2.7
C	2/100 x 3.75 skewed nails + 2 wire dogs	4.7

NOTE –

(1) Rafter spans may be increased by 10 % for rafters continuous over 2 or more spans that have not been birdsmouthed at intermediate supports.

(2) Fixing types at intermediate supports for rafters running continuously over those supports shall have double the capacity of the fixing types given in this table.

(3) For the full range of fixing types and capacity see table 10.13.

(4) Members 70 mm and 90 mm thick may be substituted with built-up members sized and nailed in accordance with 2.4.4.7.

Amd 2
May '06

Copyright Standards New Zealand

© The Crown in right of New Zealand, administered by the New Zealand Standards Executive. Access to this standard has been sponsored by the Ministry of Business, Innovation, and Employment under copyright license LN001498. You are not permitted to reproduce or distribute any part of this standard without prior written permission from Standards New Zealand, on behalf of New Zealand Standards Executive, unless your actions are covered by Part 3 of the Copyright Act 1994.

Table 10.2 – Rafters (continued) (see 10.2.1.3.2) **– VSG 8 and MSG 8**

(c) Light roof for high wind zone

Rafter size (Width x thickness)	Rafter spacing (mm)					
	600		900		1200	
	Rafter span	Fixing type	Rafter span	Fixing type	Rafter span	Fixing type
(mm x mm)	(m)		(m)		(m)	
70 x 35	1.4	A	1.2	A	–	–
90 x 35	1.8	A	1.6	B	1.4	B
140 x 35	2.7	B	2.3	B	2.1	B
70 x 45	1.5	A	1.3	B	1.2	B
90 x 45	2.0	B	1.7	B	1.6	B
140 x 45	3.1	B	2.7	B	2.5	B
190 x 45	3.9	B	3.3	B	3.0	B
240 x 45	4.2	B	3.6	B	3.3	B
290 x 45	4.4	B	3.9	B	3.5	B
90 x 70	2.3	B	2.0	B	1.8	B
140 x 70	3.6	B	3.2	B	2.9	B
190 x 70	5.0	B	4.3	B	3.9	C
240 x 70	6.3	B	5.5	C	5.0	C
290 x 70	6.9	B	6.1	C	5.5	C

Fixing type	Fixing to resist uplift	Alternative fixing capacity (kN)
A	2/100 x 3.75 skewed nails	0.7
B	2/100 x 3.75 skewed nails + 1 wire dog	2.7
C	2/100 x 3.75 skewed nails + 2 wire dogs	4.7

NOTE –

(1) Rafter spans may be increased by 10 % for rafters continuous over 2 or more spans that have not been birdsmouthed at intermediate supports.

(2) Fixing types at intermediate supports for rafters running continuously over those supports shall have double the capacity of the fixing types given in this table.

(3) For the full range of fixing types and capacity see table 10.13.

(4) Members 70 mm and 90 mm thick may be substituted with built-up members sized and nailed in accordance with 2.4.4.7.

Amd 2
May '06

Copyright Standards New Zealand

© The Crown in right of New Zealand, administered by the New Zealand Standards Executive. Access to this standard has been sponsored by the Ministry of Business, Innovation, and Employment under copyright license LN001498. You are not permitted to reproduce or distribute any part of this standard without prior written permission from Standards New Zealand, on behalf of New Zealand Standards Executive, unless your actions are covered by Part 3 of the Copyright Act 1994.

Table 10.2 – Rafters (continued) (see 10.2.1.3.2) **– VSG 8 and MSG 8**

(d) Light roof for very high wind zone

Rafter size (Width x thickness)	Rafter spacing (mm)					
	600		900		1200	
	Rafter span	Fixing type	Rafter span	Fixing type	Rafter span	Fixing type
(mm x mm)	(m)		(m)		(m)	
70 x 35	1.3	A	–	–	–	–
90 x 35	1.7	B	1.5	B	1.3	B
140 x 35	2.4	B	2.1	B	1.9	B
70 x 45	1.4	A	1.2	B	–	–
90 x 45	1.8	B	1.6	B	1.4	B
140 x 45	2.9	B	2.5	B	2.3	B
190 x 45	3.5	B	3.0	B	2.7	B
240 x 45	3.8	B	3.3	B	3.0	C
290 x 45	4.1	B	3.5	B	3.2	C
90 x 70	2.1	B	1.8	B	1.7	B
140 x 70	3.3	B	2.9	B	2.6	B
190 x 70	4.5	B	3.9	C	3.6	C
240 x 70	5.7	B	5.0	C	4.5	C
290 x 70	6.3	C	5.5	C	5.0	C

Fixing type	Fixing to resist uplift	Alternative fixing capacity (kN)
A	2/100 x 3.75 skewed nails	0.7
B	2/100 x 3.75 skewed nails + 1 wire dog	2.7
C	2/100 x 3.75 skewed nails + 2 wire dogs	4.7

NOTE –

(1) Rafter spans may be increased by 10 % for rafters continuous over 2 or more spans that have not been birdsmouthed at intermediate supports.

(2) Fixing types at intermediate supports for rafters running continuously over those supports shall have double the capacity of the fixing types given in this table.

(3) For the full range of fixing types and capacity see table 10.13.

(4) Members 70 mm and 90 mm thick may be substituted with built-up members sized and nailed in accordance with 2.4.4.7.

Amd 2
May '06

Copyright Standards New Zealand

© The Crown in right of New Zealand, administered by the New Zealand Standards Executive. Access to this standard has been sponsored by the Ministry of Business, Innovation, and Employment under copyright license LN001498. You are not permitted to reproduce or distribute any part of this standard without prior written permission from Standards New Zealand, on behalf of New Zealand Standards Executive, unless your actions are covered by Part 3 of the Copyright Act 1994.

Table 10.2 – Rafters (continued) (see 10.2.1.3.2) **– VSG 8 and MSG 8**

(e) Heavy roof for low and medium wind zone

Rafter size (Width x thickness)	Rafter spacing (mm)								
	480			600			900		
	Rafter span	Fixing type		Rafter span	Fixing type		Rafter span	Fixing type	
(mm x mm)	(m)	L	M	(m)	L	M	(m)	L	M
70 x 35	1.3	A	A	1.2	A	A	–	–	–
90 x 35	1.7	A	A	1.6	A	A	1.4	A	A
140 x 35	2.6	A	A	2.4	A	A	2.1	A	A
70 x 45	1.4	A	A	1.3	A	A	–	–	–
90 x 45	1.8	A	A	1.7	A	A	1.5	A	A
140 x 45	2.9	A	A	2.7	A	A	2.3	A	A
190 x 45	3.9	A	A	3.6	A	A	3.2	A	B
240 x 45	4.9	A	A	4.6	A	B	4.0	A	B
290 x 45	6.0	A	B	5.6	A	B	4.8	A	B
90 x 70	2.1	A	A	2.0	A	A	1.7	A	A
140 x 70	3.3	A	A	3.1	A	A	2.7	A	A
190 x 70	4.5	A	A	4.2	A	A	3.7	A	B
240 x 70	5.7	B	B	5.3	B	B	4.6	B	C
290 x 70	6.9	B	B	6.4	B	B	5.6	B	C

Fixing type	Fixing to resist uplift	Alternative fixing capacity (kN)
A	2/100 x 3.75 skewed nails	0.7
B	2/100 x 3.75 skewed nails + 1 wire dog	2.7
C	2/100 x 3.75 skewed nails + 2 wire dogs	4.7

NOTE –

(1) Rafter spans may be increased by 10 % for rafters continuous over 2 or more spans that have not been birdsmouthed at intermediate supports.

(2) Fixing types at intermediate supports for rafters running continuously over those supports shall have double the capacity of the fixing types given in this table.

(3) For the full range of fixing types and capacity see table 10.13.

Amd 2 May '06 (4) Members 70 mm and 90 mm thick may be substituted with built-up members sized and nailed in accordance with 2.4.4.7.

Copyright Standards New Zealand

© The Crown in right of New Zealand, administered by the New Zealand Standards Executive. Access to this standard has been sponsored by the Ministry of Business, Innovation, and Employment under copyright license LN001498. You are not permitted to reproduce or distribute any part of this standard without prior written permission from Standards New Zealand, on behalf of New Zealand Standards Executive, unless your actions are covered by Part 3 of the Copyright Act 1994.

Table 10.2 – Rafters (continued) (see 10.2.1.3.2) **– VSG 8 and MSG 8**

(f) Heavy roof for high and very high wind zone

Rafter size (Width x thickness)	Rafter spacing (mm)								
	480			600			900		
	Rafter span	Fixing type		Rafter span	Fixing type		Rafter span	Fixing type	
(mm x mm)	(m)	H	VH	(m)	H	VH	(m)	H	VH
70 x 35	1.3	A	A	1.2	A	A	–	–	–
90 x 35	1.7	A	A	1.6	A	A	1.4	A	B
140 x 35	2.6	A	B	2.4	A	B	2.1	B	B
70 x 45	1.4	A	A	1.3	A	A	–	–	–
90 x 45	1.8	A	A	1.7	A	A	1.5	A	B
140 x 45	2.9	A	B	2.7	B	B	2.3	B	B
190 x 45	3.9	B	B	3.6	B	B	3.2	B	B
240 x 45	4.4	B	B	4.1	B	B	3.5	B	B
290 x 45	5.2*	B	–	4.9*	B	–	4.2*	B	–
290 x 45	4.7†	–	B	4.3†	–	B	3.8†	–	B
90 x 70	2.1	A	A	2.0	A	B	1.7	B	B
140 x 70	3.3	B	B	3.1	B	B	2.7	B	B
190 x 70	4.5	B	B	4.2	B	B	3.7	B	B
240 x 70	5.7	B	B	5.3	B	B	4.6	B	C
290 x 70	6.9	B	B	6.4	B	B	5.6	B	C

* High wind zone
† Very high wind zone

Fixing type	Fixing to resist uplift	Alternative fixing capacity (kN)
A	2/100 x 3.75 skewed nails	0.7
B	2/100 x 3.75 skewed nails + 1 wire dog	2.7
C	2/100 x 3.75 skewed nails + 2 wire dogs	4.7

NOTE –
(1) Rafter spans may be increased by 10 % for rafters continuous over 2 or more spans that have not been birdsmouthed at intermediate supports.
(2) Fixing types at intermediate supports for rafters running continuously over those supports shall have double the capacity of the fixing types given in this table.
(3) For the full range of fixing types and capacity see table 10.13.
(4) Members 70 mm and 90 mm thick may be substituted with built-up members sized and nailed in accordance with 2.4.4.7.

Amd 2
May '06

Copyright Standards New Zealand

© The Crown in right of New Zealand, administered by the New Zealand Standards Executive. Access to this standard has been sponsored by the Ministry of Business, Innovation, and Employment under copyright license LN001498. You are not permitted to reproduce or distribute any part of this standard without prior written permission from Standards New Zealand, on behalf of New Zealand Standards Executive, unless your actions are covered by Part 3 of the Copyright Act 1994.

Table 10.2 – Rafters (continued) (see 10.2.1.3.2) **– VSG 8 and MSG 8**

(g) Dimensions for valley rafters for all wind zones

Rafter size (Width x thickness)	Maximum span of valley rafters (m) and their fixing types for all wind zones			
	Light roof		Heavy roof	
	Rafter span	Fixing type	Rafter span	Fixing type
(mm x mm)	(m)		(m)	
70 x 35	1.3	B	1.2	B
90 x 35	1.5	B	1.4	B
140 x 35	2.1	B	2.0	B
70 x 45	1.3	B	1.3	B
90 x 45	1.6	B	1.5	B
140 x 45	2.3	B	2.2	B
190 x 45	2.9	B	2.7	B
240 x 45	3.4	C	3.3	B
290 x 45	4.0	C	3.8	B
90 x 70	1.8	B	1.7	B
140 x 70	2.5	B	2.4	B
190 x 70	3.2	B	3.1	B
240 x 70	3.8	C	3.6	B
290 x 70	4.4	C	4.2	C

Fixing type	Fixing to resist uplift	Alternative fixing capacity (kN)
B	2/100 x 3.75 skewed nails + 1 wire dog	2.7
C	2/100 x 3.75 skewed nails + 2 wire dogs	4.7

NOTE –

(1) For the full range of fixing types and capacity see table 10.13.

(2) Proprietary fixings that have the required fxing capacity indicated in tables may be used.

(3) Members 70 mm and 90 mm thick may be substituted with built-up members sized and nailed in accordance with 2.4.4.7.

Amd 2
May '06

Copyright Standards New Zealand

© The Crown in right of New Zealand, administered by the New Zealand Standards Executive. Access to this standard has been sponsored by the Ministry of Business, Innovation, and Employment under copyright license LN001498. You are not permitted to reproduce or distribute any part of this standard without prior written permission from Standards New Zealand, on behalf of New Zealand Standards Executive, unless your actions are covered by Part 3 of the Copyright Act 1994.

Table 10.2 – Rafters (see 10.2.1.3.2) **– VSG 10 and MSG 10**

(a) Light roof for low wind zone

Rafter size (Width x thickness)	Rafter spacing (mm)					
	600		900		1200	
	Rafter span	Fixing type	Rafter span	Fixing type	Rafter span	Fixing type
(mm x mm)	(m)		(m)		(m)	
70 x 35	1.9	A	1.6	A	1.5	A
90 x 35	2.4	A	2.1	A	1.9	A
140 x 35	3.8	A	3.3	B	3.0	B
70 x 45	2.1	A	1.8	A	1.6	A
90 x 45	2.7	A	2.3	A	2.1	B
140 x 45	4.1	B	3.6	B	3.3	B
190 x 45	5.5	B	4.8	B	4.4	B
240 x 45	6.0	B	5.2	B	4.7	B
290 x 45	6.4	B	5.6	B	5.0	B
90 x 70	3.1	A	2.7	B	2.7	B
140 x 70	4.8	B	4.2	B	3.8	B
190 x 70	6.5	B	5.7	B	5.2	B
240 x 70	8.1	B	7.2	B	6.6	B
290 x 70	9.3	B	8.4	B	7.8	C

Fixing type	Fixing to resist uplift	Alternative fixing capacity (kN)
A	2/100 x 3.75 skewed nails	0.7
B	2/100 x 3.75 skewed nails + 1 wire dog	2.7
C	2/100 x 3.75 skewed nails + 2 wire dogs	4.7

NOTE –

(1) Rafter spans may be increased by 10 % for rafters continuous over 2 or more spans that have not been birdsmouthed at intermediate supports.

(2) Fixing types at intermediate supports for rafters running continuously over those supports shall have double the capacity of the fixing types given in this table.

(3) For the full range of fixing types and capacity see table 10.13.

(4) Members 70 mm and 90 mm thick may be substituted with built-up members sized and nailed in accordance with 2.4.4.7.

Amd 2
May '06

Copyright Standards New Zealand

© The Crown in right of New Zealand, administered by the New Zealand Standards Executive. Access to this standard has been sponsored by the Ministry of Business, Innovation, and Employment under copyright license LN001498. You are not permitted to reproduce or distribute any part of this standard without prior written permission from Standards New Zealand, on behalf of New Zealand Standards Executive, unless your actions are covered by Part 3 of the Copyright Act 1994.

Table 10.2 – Rafters (continued) (see 10.2.1.3.2) **– VSG 10 and MSG 10**

(b) Light roof for medium wind zone

Rafter size (Width x thickness)	Rafter spacing (mm)					
	600		900		1200	
	Rafter span	Fixing type	Rafter span	Fixing type	Rafter span	Fixing type
(mm x mm)	(m)		(m)		(m)	
70 x 35	1.8	A	1.5	A	1.4	B
90 x 35	2.3	A	2.0	B	1.8	B
140 x 35	3.5	B	3.0	B	2.7	B
70 x 45	1.9	A	1.7	A	1.5	B
90 x 45	2.5	A	2.2	B	2.0	B
140 x 45	3.9	B	3.4	B	3.1	B
190 x 45	4.9	B	4.3	B	3.9	B
240 x 45	5.4	B	4.7	B	4.2	B
290 x 45	5.7	B	5.0	B	4.5	B
90 x 70	2.9	B	2.5	B	2.3	B
140 x 70	4.5	B	3.9	B	3.6	B
190 x 70	6.1	B	5.4	B	4.9	B
240 x 70	7.7	B	6.8	B	6.2	C
290 x 70	8.9	B	7.8	C	7.0	C

Fixing type	Fixing to resist uplift	Alternative fixing capacity (kN)
A	2/100 x 3.75 skewed nails	0.7
B	2/100 x 3.75 skewed nails + 1 wire dog	2.7
C	2/100 x 3.75 skewed nails + 2 wire dogs	4.7

NOTE –

(1) Rafter spans may be increased by 10 % for rafters continuous over 2 or more spans that have not been birdsmouthed at intermediate supports.

(2) Fixing types at intermediate supports for rafters running continuously over those supports shall have double the capacity of the fixing types given in this table.

(3) For the full range of fixing types and capacity see table 10.13.

(4) Members 70 mm and 90 mm thick may be substituted with built-up members sized and nailed in accordance with 2.4.4.7.

Amd 2
May '06

Copyright Standards New Zealand

© The Crown in right of New Zealand, administered by the New Zealand Standards Executive. Access to this standard has been sponsored by the Ministry of Business, Innovation, and Employment under copyright license LN001498. You are not permitted to reproduce or distribute any part of this standard without prior written permission from Standards New Zealand, on behalf of New Zealand Standards Executive, unless your actions are covered by Part 3 of the Copyright Act 1994.

Table 10.2 – Rafters (continued) (see 10.2.1.3.2) **– VSG 10 and MSG 10**

(c) Light roof for high wind zone

Rafter size (Width x thickness)	Rafter spacing (mm)					
	600		900		1200	
	Rafter span	Fixing type	Rafter span	Fixing type	Rafter span	Fixing type
(mm x mm)	(m)		(m)		(m)	
70 x 35	1.5	A	1.3	B	1.2	B
90 x 35	2.0	B	1.7	B	1.6	B
140 x 35	3.0	B	2.6	B	2.4	B
70 x 45	1.7	A	1.4	B	1.3	B
90 x 45	2.2	B	1.9	B	1.7	B
140 x 45	3.4	B	2.9	B	2.7	B
190 x 45	4.4	B	3.8	B	3.4	B
240 x 45	4.7	B	4.1	B	3.7	B
290 x 45	5.0	B	4.4	B	4.0	C
90 x 70	2.5	B	2.2	B	2.0	B
140 x 70	3.9	B	3.4	B	3.1	B
190 x 70	5.3	B	4.7	B	4.2	C
240 x 70	6.7	B	5.9	C	5.3	C
290 x 70	7.8	C	6.8	C	6.2	C

Fixing type	Fixing to resist uplift	Alternative fixing capacity (kN)
A	2/100 x 3.75 skewed nails	0.7
B	2/100 x 3.75 skewed nails + 1 wire dog	2.7
C	2/100 x 3.75 skewed nails + 2 wire dogs	4.7

NOTE –

(1) Rafter spans may be increased by 10 % for rafters continuous over 2 or more spans that have not been birdsmouthed at intermediate supports.

(2) Fixing types at intermediate supports for rafters running continuously over those supports shall have double the capacity of the fixing types given in this table.

(3) For the full range of fixing types and capacity see table 10.13.

(4) Members 70 mm and 90 mm thick may be substituted with built-up members sized and nailed in accordance with 2.4.4.7.

Amd 2
May '06

Copyright Standards New Zealand

Table 10.2 – Rafters (continued) (see 10.2.1.3.2) **– VSG 10 and MSG 10**

(d) Light roof for very high wind zone

Rafter size (Width x thickness)	Rafter spacing (mm)					
	600		900		1200	
	Rafter span	Fixing type	Rafter span	Fixing type	Rafter span	Fixing type
(mm x mm)	(m)		(m)		(m)	
70 x 35	1.4	A	1.2	B	–	–
90 x 35	1.8	B	1.6	B	1.4	B
140 x 35	2.8	B	2.4	B	2.2	B
70 x 45	1.5	B	1.3	B	1.2	B
90 x 45	2.0	B	1.7	B	1.5	B
140 x 45	3.1	B	2.7	B	2.4	B
190 x 45	4.0	B	3.4	B	3.1	C
240 x 45	4.3	B	3.7	B	3.4	C
290 x 45	4.6	B	4.0	C	3.6	C
90 x 70	2.3	B	2.0	B	1.8	B
140 x 70	3.6	B	3.1	B	2.8	C
190 x 70	4.8	B	4.2	C	3.8	C
240 x 70	6.1	C	5.4	C	4.9	C
290 x 70	7.1	C	6.2	C	5.6	D

Fixing type	Fixing to resist uplift	Alternative fixing capacity (kN)
A	2/100 x 3.75 skewed nails	0.7
B	2/100 x 3.75 skewed nails + 1 wire dog	2.7
C	2/100 x 3.75 skewed nails + 2 wire dogs	4.7
D	2/100 x 3.75 skewed nails + 3 wire dogs	6.7

NOTE –

(1) Rafter spans may be increased by 10 % for rafters continuous over 2 or more spans that have not been birdsmouthed at intermediate supports.

(2) Fixing types at intermediate supports for rafters running continuously over those supports shall have double the capacity of the fixing types given in this table.

(3) For the full range of fixing types and capacity see table 10.13.

(4) Members 70 mm and 90 mm thick may be substituted with built-up members sized and nailed in accordance with 2.4.4.7.

Amd 2
May '06

© The Crown in right of New Zealand, administered by the New Zealand Standards Executive. Access to this standard has been sponsored by the Ministry of Business, Innovation, and Employment under copyright license LN001498. You are not permitted to reproduce or distribute any part of this standard without prior written permission from Standards New Zealand, on behalf of New Zealand Standards Executive, unless your actions are covered by Part 3 of the Copyright Act 1994.

Copyright Standards New Zealand

© The Crown in right of New Zealand, administered by the New Zealand Standards Executive. Access to this standard has been sponsored by the Ministry of Business, Innovation, and Employment under copyright license LN001498. You are not permitted to reproduce or distribute any part of this standard without prior written permission from Standards New Zealand, on behalf of New Zealand Standards Executive, unless your actions are covered by Part 3 of the Copyright Act 1994.

Table 10.2 – Rafters (continued) (see 10.2.1.3.2) **– VSG 10 and MSG 10**

(e) Heavy roof for low and medium wind zone

Rafter size (Width x thickness)	Rafter spacing (mm)								
	480			600			900		
	Rafter span	Fixing type		Rafter span	Fixing type		Rafter span	Fixing type	
(mm x mm)	(m)	L	M	(m)	L	M	(m)	L	M
70 x 35	1.4	A	A	1.3	A	A	1.1	A	A
90 x 35	1.8	A	A	1.7	A	A	1.5	A	A
140 x 35	2.8	A	A	2.6	A	A	2.3	A	A
70 x 45	1.5	A	A	1.4	A	A	1.2	A	A
90 x 45	2.0	A	A	1.8	A	A	1.6	A	A
140 x 45	3.1	A	A	2.9	A	A	2.5	A	A
190 x 45	4.2	A	A	3.9	A	A	3.4	A	B
240 x 45	5.3	A	B	4.9	A	B	4.3	A	B
290 x 45	6.4	A	B	6.0	A	B	5.2	B	B
90 x 70	2.3	A	A	2.1	A	A	1.8	A	A
140 x 70	3.6	A	A	3.3	A	A	2.9	A	B
190 x 70	4.9	A	A	4.5	A	B	3.9	A	B
240 x 70	6.2	B	B	5.7	B	B	5.0	B	C
290 x 70	7.5	B	B	6.9	B	C	6.0	B	C

Fixing type	Fixing to resist uplift	Alternative fixing capacity (kN)
A	2/100 x 3.75 skewed nails	0.7
B	2/100 x 3.75 skewed nails + 1 wire dog	2.7
C	2/100 x 3.75 skewed nails + 2 wire dogs	4.7

NOTE –

(1) Rafter spans may be increased by 10 % for rafters continuous over 2 or more spans that have not been birdsmouthed at intermediate supports.

(2) Fixing types at intermediate supports for rafters running continuously over those supports shall have double the capacity of the fixing types given in this table.

(3) For the full range of fixing types and capacity see table 10.13.

(4) Members 70 mm and 90 mm thick may be substituted with built-up members sized and nailed in accordance with 2.4.4.7.

Amd 2
May '06

Copyright Standards New Zealand

© The Crown in right of New Zealand, administered by the New Zealand Standards Executive. Access to this standard has been sponsored by the Ministry of Business, Innovation, and Employment under copyright license LN001498. You are not permitted to reproduce or distribute any part of this standard without prior written permission from Standards New Zealand, on behalf of New Zealand Standards Executive, unless your actions are covered by Part 3 of the Copyright Act 1994.

Table 10.2 – Rafters (continued) (see 10.2.1.3.2) **– VSG 10 and MSG 10**

(f) Heavy roof for high and very high wind zone

Rafter size (Width x thickness)	Rafter spacing (mm)								
	480			600			900		
	Rafter span	Fixing type		Rafter span	Fixing type		Rafter span	Fixing type	
(mm x mm)	(m)	H	VH	(m)	H	VH	(m)	H	VH
70 x 35	1.4	A	A	1.3	A	A	1.1	A	B
90 x 35	1.8	A	A	1.7	A	A	1.5	A	B
140 x 35	2.8	A	B	2.6	B	B	2.3	B	B
70 x 45	1.5	A	A	1.4	A	A	1.2	A	B
90 x 45	2.0	A	A	1.8	A	B	1.6	A	B
140 x 45	3.1	B	B	2.9	B	B	2.5	B	B
190 x 45	4.2	B	B	3.9	B	B	3.4	B	B
240 x 45	4.9	B	B	4.6	B	B	4.0	B	B
290 x 45	5.9*	B	–	5.5*	B	–	4.8*	B	–
290 x 45	5.3†	–	B	4.9†	–	B	4.3†	–	B
90 x 70	2.3	A	B	2.1	A	B	1.8	B	B
140 x 70	3.6	B	B	3.3	B	B	2.9	B	B
190 x 70	4.9	B	B	4.5	B	B	3.9	B	B
240 x 70	6.2	B	B	5.7	B	B	5.0	B	C
290 x 70	7.5	B	B	6.9	B	B	6.0	B	C

* High wind zone
† Very high wind zone

Fixing type	Fixing to resist uplift	Alternative fixing capacity (kN)
A	2/100 x 3.75 skewed nails	0.7
B	2/100 x 3.75 skewed nails + 1 wire dog	2.7
C	2/100 x 3.75 skewed nails + 2 wire dogs	4.7

NOTE –
(1) Rafter spans may be increased by 10 % for rafters continuous over 2 or more spans that have not been birdsmouthed at intermediate supports.
(2) Fixing types at intermediate supports for rafters running continuously over those supports shall have double the capacity of the fixing types given in this table.
(3) For the full range of fixing types and capacity see table 10.13.
(4) Members 70 mm and 90 mm thick may be substituted with built-up members sized and nailed in accordance with 2.4.4.7.

Amd 2
May '06

Copyright Standards New Zealand

© The Crown in right of New Zealand, administered by the New Zealand Standards Executive. Access to this standard has been sponsored by the Ministry of Business, Innovation, and Employment under copyright license LN001498. You are not permitted to reproduce or distribute any part of this standard without prior written permission from Standards New Zealand, on behalf of New Zealand Standards Executive, unless your actions are covered by Part 3 of the Copyright Act 1994.

Table 10.2 – Rafters (continued) (see 10.2.1.3.2) **– VSG 10 and MSG 10**

(g) Dimensions for valley rafters for all wind zones

Rafter size (Width x thickness)	Maximum span of valley rafters (m) and their fixing types for all wind zones			
	Light roof		Heavy roof	
	Rafter span	Fixing type	Rafter span	Fixing type
(mm x mm)	(m)		(m)	
70 x 35	1.3	B	1.3	B
90 x 35	1.6	B	1.5	B
140 x 35	2.3	B	2.1	B
70 x 45	1.4	B	1.3	B
90 x 45	1.7	B	1.6	B
140 x 45	2.4	B	2.3	B
190 x 45	3.0	B	2.9	B
240 x 45	3.6	C	3.4	B
290 x 45	4.2	C	4.0	B
90 x 70	1.9	B	1.8	B
140 x 70	2.7	B	2.6	B
190 x 70	3.4	B	3.2	B
240 x 70	4.1	C	3.9	B
290 x 70	4.7	C	4.4	C

Fixing type	Fixing to resist uplift	Alternative fixing capacity (kN)
B	2/100 x 3.75 skewed nails + 1 wire dog	2.7
C	2/100 x 3.75 skewed nails + 2 wire dogs	4.7

NOTE –

(1) For the full range of fixing types and capacity see table 10.13.

(2) Proprietary fixings that have the required fxing capacity indicated in tables may be used.

(3) Members 70 mm and 90 mm thick may be substituted with built-up members sized and nailed in accordance with 2.4.4.7.

Amd 2
May '06

Copyright Standards New Zealand

NOTES

© The Crown in right of New Zealand, administered by the New Zealand Standards Executive. Access to this standard has been sponsored by the Ministry of Business, Innovation, and Employment under copyright license LN001498. You are not permitted to reproduce or distribute any part of this standard without prior written permission from Standards New Zealand, on behalf of New Zealand Standards Executive, unless your actions are covered by Part 3 of the Copyright Act 1994.

Copyright Standards New Zealand

© The Crown in right of New Zealand, administered by the New Zealand Standards Executive. Access to this standard has been sponsored by the Ministry of Business, Innovation, and Employment under copyright license LN001498. You are not permitted to reproduce or distribute any part of this standard without prior written permission from Standards New Zealand, on behalf of New Zealand Standards Executive, unless your actions are covered by Part 3 of the Copyright Act 1994.

10.2.1.3.3
Hip rafters that support *jack rafters,* which are horizontally restrained by ceiling *joists* and ceiling *framing,* shall be 19 mm thick and 50 mm deeper than the members that they support. Amd 2 May '06

10.2.1.3.4
Hip rafters that project 600 mm or more, measured along the *rafter* beyond their supports, so as to form overhanging eaves shall either be:

(a) Of the same thickness as the *rafters* they support; or

(b) Flitched on both sides with timber 19 mm thick, extending not less than 450 mm along the *rafter* in both directions from the birdsmouth (see figure 10.4 for birdsmouth details). Each flitch shall be nailed to each *rafter* end with 6 evenly-*spaced* 60 x 2.8 nails. Amd 2 May '06

10.2.1.3.5
Each *rafter* other than a hip or *valley rafter* shall run at right angles to its associated ridge or eaves line.

10.2.1.3.6
Rafters shall be seated to *top plates*, *lintels*, and beams as shown in figures 10.4 and 10.5 and according to the following criteria:

(a) The bearing width shall not be less than 32 mm;

(b) The net depth of the *rafter* at the notch or birdsmouth shall not be less than 80 % of the actual depth of the *rafter,* nor less than 65 mm.

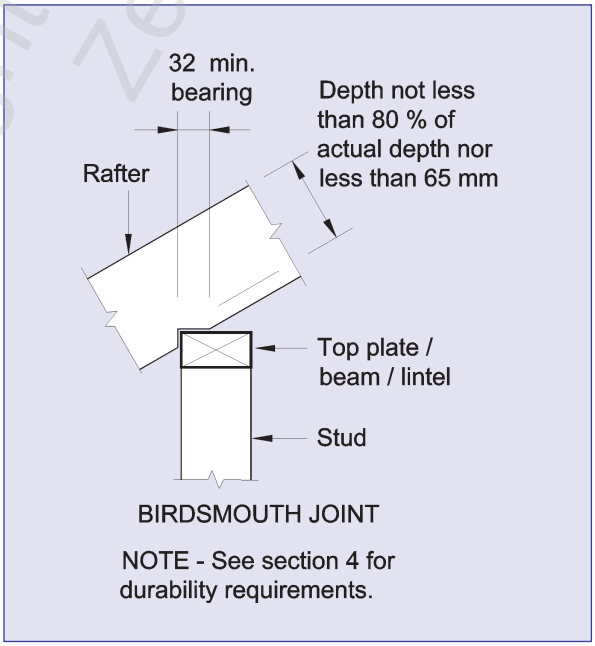

Figure 10.4 – Seating of rafters (see 10.2.1.3.6)

Copyright Standards New Zealand

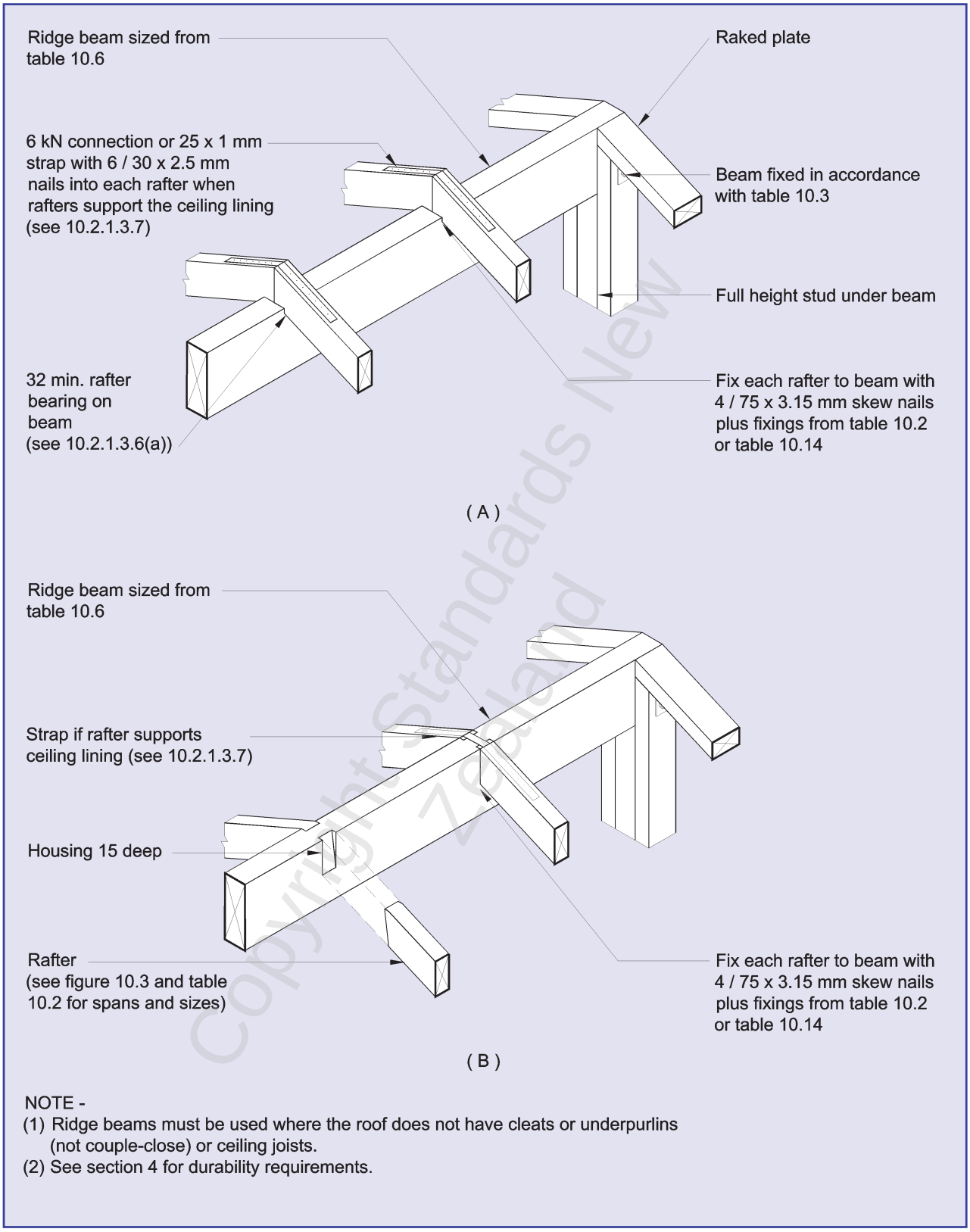

NOTE -
(1) Ridge beams must be used where the roof does not have cleats or underpurlins (not couple-close) or ceiling joists.
(2) See section 4 for durability requirements.

Figure 10.5 – Rafter to ridge beam connections (see 10.2.1.3.6)

© The Crown in right of New Zealand, administered by the New Zealand Standards Executive. Access to this standard has been sponsored by the Ministry of Business, Innovation, and Employment under copyright license LN001498. You are not permitted to reproduce or distribute any part of this standard without prior written permission from Standards New Zealand, on behalf of New Zealand Standards Executive, unless your actions are covered by Part 3 of the Copyright Act 1994.

Copyright Standards New Zealand

© The Crown in right of New Zealand, administered by the New Zealand Standards Executive. Access to this standard has been sponsored by the Ministry of Business, Innovation, and Employment under copyright license LN001498. You are not permitted to reproduce or distribute any part of this standard without prior written permission from Standards New Zealand, on behalf of New Zealand Standards Executive, unless your actions are covered by Part 3 of the Copyright Act 1994.

10.2.1.3.7
Any *rafter* that directly supports ceiling *lining* material shall be fixed as follows:

(a) To *top plates*: As required by tables 10.12 and 10.13 as if the *rafter* were a truss;

(b) To corresponding *rafters*: As shown in figure 10.6, or by an alternative connection of 6 kN *capacity* in tension and compression along the line of the *rafter*.

10.2.1.4 *Ridge boards*

10.2.1.4.1
Ridge boards in *couple-close roofs* shall be 19 mm thick and provide full bearing for the whole depth of the *rafters* (see figure 10.14). Amd 2 May '06

10.2.1.4.2
Any length of *ridge board* that supports one or more *jack rafters* shall itself be supported by *struts* at no more than the following centres depending on the timber grade of the *ridge board*: 1.4 m for No. 1 *Framing* or MSG6; 1.6 m for VSG8 or MSG8; and 1.8 m for VSG10 or MSG10. Such *struts* shall comply with the requirements for *underpurlin struts* given by 10.2.1.10. Amd 2 May '06

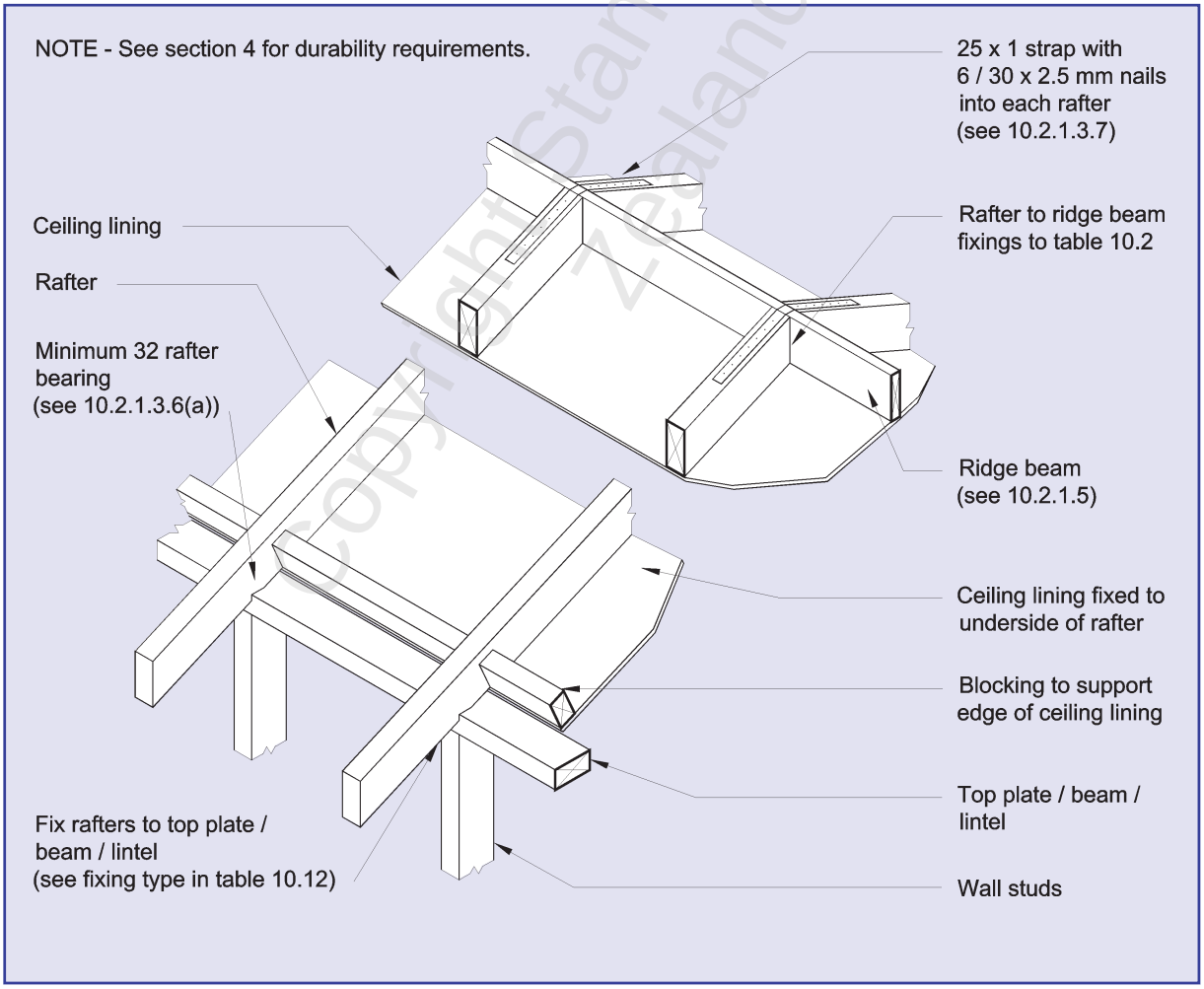

Figure 10.6 – Fixing rafters – Skillion roof (see 10.2.1.3.7)

Copyright Standards New Zealand

© The Crown in right of New Zealand, administered by the New Zealand Standards Executive. Access to this standard has been sponsored by the Ministry of Business, Innovation, and Employment under copyright license LN001498. You are not permitted to reproduce or distribute any part of this standard without prior written permission from Standards New Zealand, on behalf of New Zealand Standards Executive, unless your actions are covered by Part 3 of the Copyright Act 1994.

10.2.1.4.3
Ridge boards may project as a cantilever to a distance beyond the face of its support not exceeding one quarter of its span.

10.2.1.5 *Ridge beams*

10.2.1.5.1
Ridge beams may be used to support the upper ends of paired *rafters* whose lower ends are not tied with ceiling *joists* or other *framing*. *Collar ties* do not provide this tie.

Amd 1 Dec '00

10.2.1.5.2
The *ridge beam* sizes shall be determined from table 10.6. The *ridge beam* shall be secured to the wall with a fixing type determined from table 10.6. The fixing shall be as required by table 10.3 and shown by figure 10.7. The built up *studs* shown in figure 10.7 shall be provided with base connections as required by table 10.3 and the wall base connection details of figure 8.12.

Amd 1 Dec '00

10.2.1.6 *Ceiling joists*

10.2.1.6.1
Ceiling *joists* shall be of the dimensions given by table 10.4.

10.2.1.6.2
Ceiling *joists* shall have their bottom surfaces set to a common level to support ceiling *lining* and shall be laid in straight lines on edge.

10.2.1.6.3
Ceiling *joists* shall have minimum landing on their supports, other than *ceiling runners*, of 32 mm.

10.2.1.6.4
Ceiling *joists* shall not be supported by *roof* or ceiling *framing* members other than *ceiling runners* complying with 10.2.1.7.

Copyright Standards New Zealand

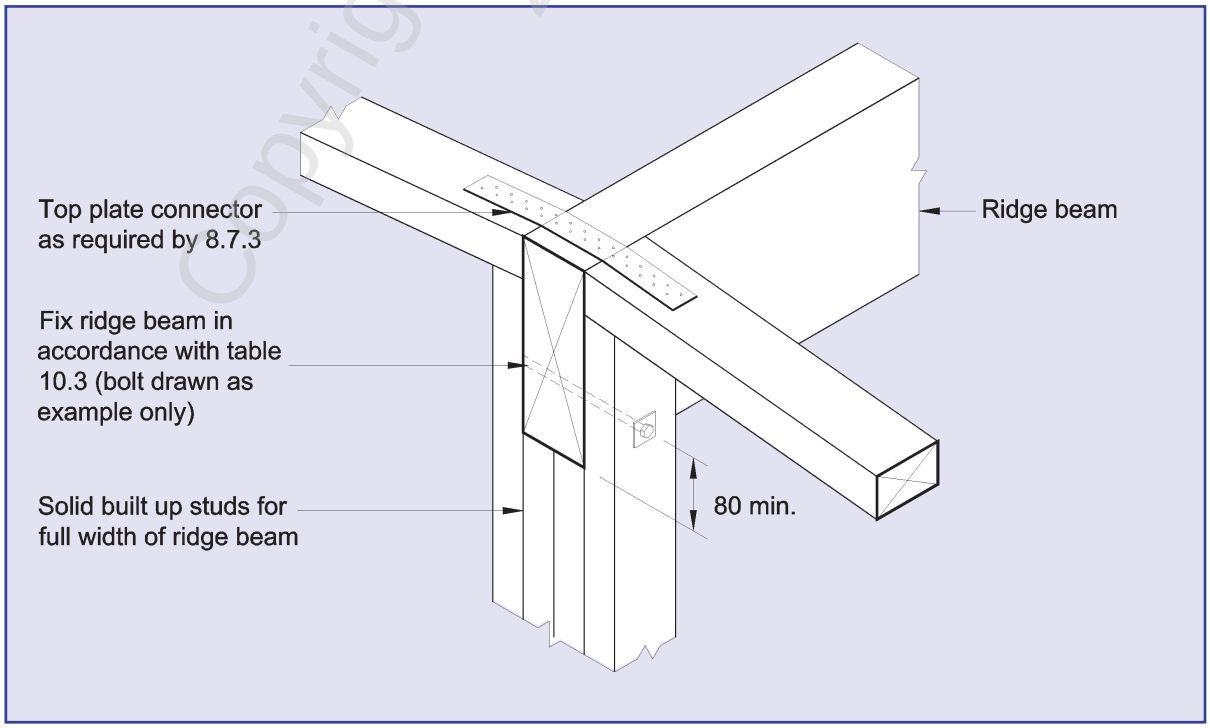

Figure 10.7 – Fixing ridge beam to wall (see 10.2.1.5)

© The Crown in right of New Zealand, administered by the New Zealand Standards Executive. Access to this standard has been sponsored by the Ministry of Business, Innovation, and Employment under copyright license LN001498. You are not permitted to reproduce or distribute any part of this standard without prior written permission from Standards New Zealand, on behalf of New Zealand Standards Executive, unless your actions are covered by Part 3 of the Copyright Act 1994.

Table 10.3 – Key to fixing types to restrain ridge beam uplift (see 10.2.1.5.2)

Fixing type	Fixing to resist uplift		Alternative fixing capacity (kN)
	Base connection of built up studs	Ridge beam to built up studs	
A	2/100 x 3.75 skew nails into bottom plate	2/100 x 3.75 nails	0.7
B	4/100 x 3.75 skew nails into bottom plate	4/100 x 3.75 nails	2.7
C	6/100 x 3.75 skew nails into bottom plate	6/100 x 3.75 nails	4.7
D	25 x 1 strap with 6 nails to stud and plate(1)(3)	1/M12 bolt	6.7
E	2/25 x 1 strap with 6 nails to stud and plate. 12 nails total(1)(3)	1/M12 bolt	8.7
F	3/25 x 1 strap with 6 nails to stud and plate. 18 nails total(2)(3)	2/M16 bolts	18.6

NOTE –

(1) Fix plate to joist with 1/M12 x 150 coach screw.

(2) Fix plate to joist with 2/M12 x 150 coach screws.

Amd 1 Dec '00 (3) Strap nails to be 30 x 2.5 mm.

Copyright Standards New Zealand

Table 10.4 – Ceiling joists (see 10.2.1.6.1) **– No. 1 Framing and MSG 6**

Ceiling joist size	Maximum span* of ceiling joists at a maximum spacing (mm) of:		
	480	600	900
(mm x mm)	(m)	(m)	(m)
90 x 35	2.0	1.9	1.6
90 x 45	2.2	2.1	1.8
140 x 35	3.2	3.0	2.5
140 x 45	3.5	3.2	2.8
190 x 45	4.7	4.4	3.8

* May be increased by 10 % for joists continuous over 2 or more spans.

NOTE – This table is applicable to all wind zones.

Table 10.4 – Ceiling joists (see 10.2.1.6.1) **– VSG 8 and MSG 8**

Ceiling joist size	Maximum span* of ceiling joists at a maximum spacing (mm) of:		
	480	600	900
(mm x mm)	(m)	(m)	(m)
90 x 35	2.3	2.1	1.8
90 x 45	2.5	2.3	2.0
140 x 35	3.5	3.3	2.9
140 x 45	3.8	3.6	3.1
190 x 45	5.2	4.8	4.2

* May be increased by 10 % for joists continuous over 2 or more spans.

NOTE – This table is applicable to all wind zones.

Table 10.4 – Ceiling joists (see 10.2.1.6.1) **– VSG 10 and MSG 10**

Ceiling joist size	Maximum span* of ceiling joists at a maximum spacing (mm) of:		
	480	600	900
(mm x mm)	(m)	(m)	(m)
90 x 35	2.4	2.3	2.0
90 x 45	2.6	2.5	2.1
140 x 35	3.8	3.5	3.1
140 x 45	4.1	3.8	3.3
190 x 45	5.6	5.2	4.6

* May be increased by 10 % for joists continuous over 2 or more spans.

NOTE – This table is applicable to all wind zones.

Amd 2
May '06

Copyright Standards New Zealand

© The Crown in right of New Zealand, administered by the New Zealand Standards Executive. Access to this standard has been sponsored by the Ministry of Business, Innovation, and Employment under copyright license LN001498. You are not permitted to reproduce or distribute any part of this standard without prior written permission from Standards New Zealand, on behalf of New Zealand Standards Executive, unless your actions are covered by Part 3 of the Copyright Act 1994.

© The Crown in right of New Zealand, administered by the New Zealand Standards Executive. Access to this standard has been sponsored by the Ministry of Business, Innovation, and Employment under copyright license LN001498. You are not permitted to reproduce or distribute any part of this standard without prior written permission from Standards New Zealand, on behalf of New Zealand Standards Executive, unless your actions are covered by Part 3 of the Copyright Act 1994.

10.2.1.6.5
As shown in figure 10.8, joints in ceiling *joists* shall be made over supports and shall either:

(a) Be lapped not less than 300 mm; or

(b) Be butted and flitched with timber of the same dimensions as the *joists* and extending not less than 225 mm on each side of the joint.

10.2.1.7 *Ceiling runners*
10.2.1.7.1
Ceiling runners shall be of the dimensions given by table 10.5.

10.2.1.7.2
Ceiling runners shall be laid in straight lines on edge.

10.2.1.7.3
Ceiling runners shall have a minimum landing of 65 mm on a packer, which is directly supported by the *top plate* of a *loadbearing wall*, provided that either:

(a) The *ceiling runner* shall land directly over a *stud*; or

(b) The packer shall span between the *studs* on each side of the *ceiling runner*.

Copyright Standards New Zealand

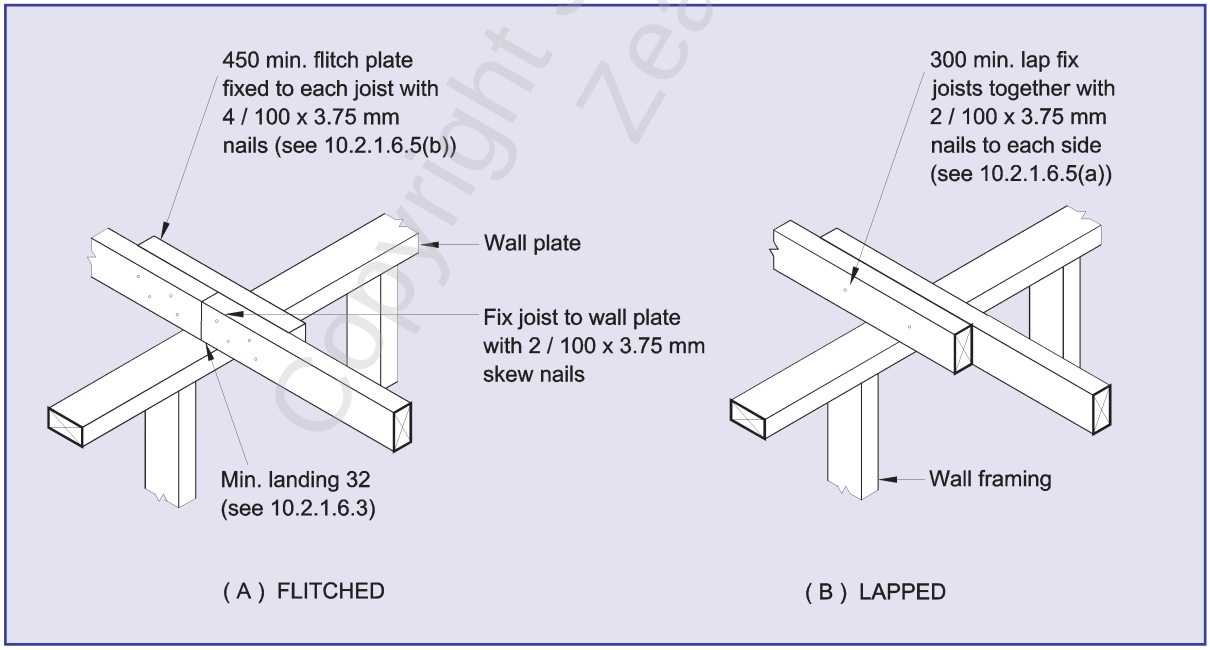

Figure 10.8 – Joints in ceiling joists (see 10.2.1.6.5)

© The Crown in right of New Zealand, administered by the New Zealand Standards Executive. Access to this standard has been sponsored by the Ministry of Business, Innovation, and Employment under copyright license LN001498. You are not permitted to reproduce or distribute any part of this standard without prior written permission from Standards New Zealand, on behalf of New Zealand Standards Executive, unless your actions are covered by Part 3 of the Copyright Act 1994.

Table 10.5 – Ceiling runners (see 10.2.1.7.1) **– No. 1 Framing and MSG 6**

Ceiling runner size (Width x thickness)	Maximum span of ceiling runners at a maximum spacing (m) of:		
	1.8	2.4	3
(mm x mm)	(m)	(m)	(m)
140 x 45	1.8	1.5	1.4
190 x 45	2.4	2.1	1.8
190 x 70	2.9	2.6	2.3
290 x 45	3.1	2.7	2.4

NOTE – Members 70 mm thick may be substituted with built-up members sized and nailed in accordance with 2.4.4.7.

Table 10.5 – Ceiling runners (see 10.2.1.7.1) **– VSG 8 and MSG 8**

Ceiling runner size (Width x thickness)	Maximum span of ceiling runners at a maximum spacing (m) of:		
	1.8	2.4	3
(mm x mm)	(m)	(m)	(m)
140 x 45	2.1	1.9	1.8
190 x 45	2.9	2.7	2.5
190 x 70	3.4	3.1	2.9
290 x 45	4.1	3.6	3.2

NOTE – Members 70 mm thick may be substituted with built-up members sized and nailed in accordance with 2.4.4.7.

Table 10.5 – Ceiling runners (see 10.2.1.7.1) **– VSG 10 and MSG 10**

Ceiling runner size (Width x thickness)	Maximum span of ceiling runners at a maximum spacing (m) of:		
	1.8	2.4	3
(mm x mm)	(m)	(m)	(m)
90 x 45	1.4	1.2	–
140 x 45	2.1	1.9	1.8
190 x 45	2.9	2.7	2.5
190 x 70	3.4	3.1	2.9
290 x 45	4.4	3.8	3.4

NOTE – Members 70 mm thick may be substituted with built-up members sized and nailed in accordance with 2.4.4.7.

Copyright Standards New Zealand

Amd 2
May '06

© The Crown in right of New Zealand, administered by the New Zealand Standards Executive. Access to this standard has been sponsored by the Ministry of Business, Innovation, and Employment under copyright license LN001498. You are not permitted to reproduce or distribute any part of this standard without prior written permission from Standards New Zealand, on behalf of New Zealand Standards Executive, unless your actions are covered by Part 3 of the Copyright Act 1994.

10.2.1.7.4
The ends of *ceiling runners* may be chamfered, but the depth of the *ceiling runner* at its support shall remain at least 50 %.

10.2.1.7.5
Ceiling runners shall be restrained from twisting at each end with *framing* or packing timbers.

10.2.1.7.6
Ceiling *joists* may be fixed to *ceiling runners* by hangers which alternate on opposite sides of the *ceiling runner,* or be skew nailed to the *ceiling runner* (see figure 10.9).

10.2.1.8 *Valley boards*
Each *valley board* shall be:

(a) 19 mm thick and wide enough to support the valley gutter; Amd 2 May '06

(b) Laid over the *jack rafters* abutting the *valley rafter*;

(c) Fixed to each *jack rafter*.

10.2.1.9 *Underpurlins*

10.2.1.9.1
The sizes of *underpurlins* and the fixings to their supports shall be as given in table 10.6 (and table 15.7 for snow loads).

C10.2.1.9.2
Cantilevered ends of underpurlins will generally occur at hips and valleys, where the underpurlin should be mitred and fixed to the hip or valley rafter.

10.2.1.9.2
An *underpurlin* may project as a cantilever to a distance beyond the face of its support, not exceeding one quarter of its span.

Copyright Standards New Zealand

Amd 2 May '06

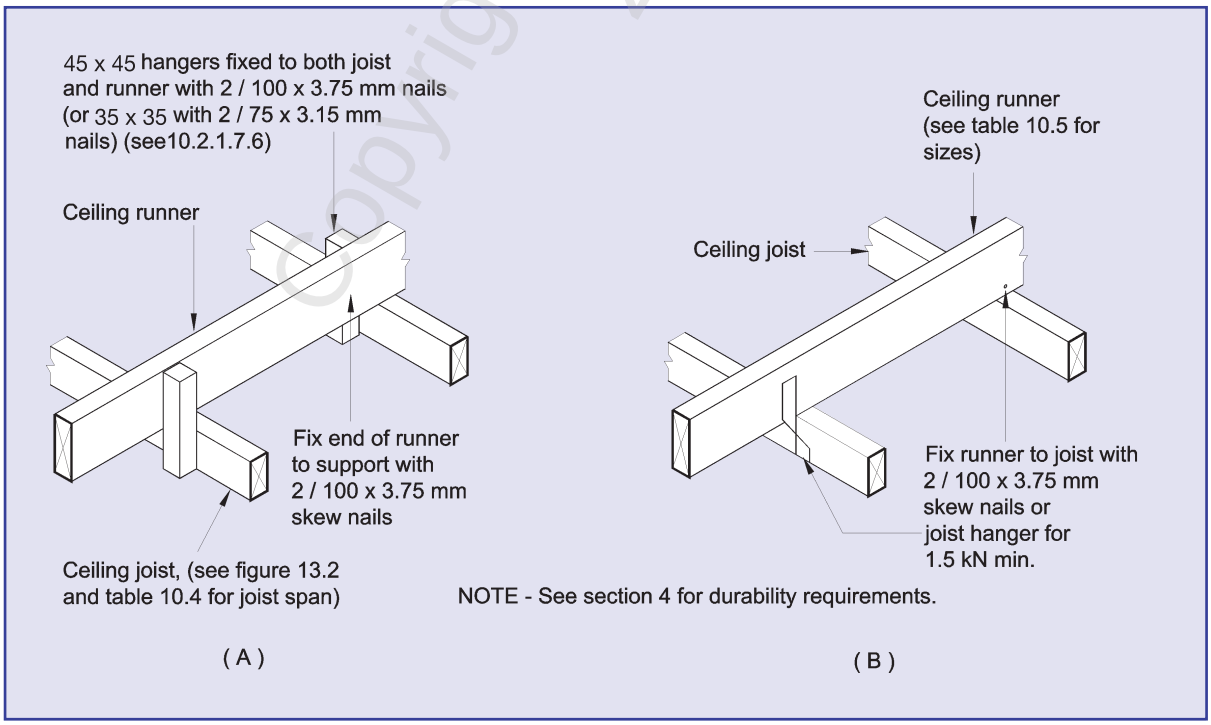

Figure 10.9 – Ceiling runners (see 10.2.1.7.6)

© The Crown in right of New Zealand, administered by the New Zealand Standards Executive. Access to this standard has been sponsored by the Ministry of Business, Innovation, and Employment under copyright license LN001498. You are not permitted to reproduce or distribute any part of this standard without prior written permission from Standards New Zealand, on behalf of New Zealand Standards Executive, unless your actions are covered by Part 3 of the Copyright Act 1994.

Table 10.6 – Underpurlins and ridge beams (see 10.2.1.5.2 and 10.2.1.9.1 and figures 10.10 and 10.11) **– No. 1 Framing and MSG 6**

(a) Light roof in low and medium wind zones

	Loaded dimension* of underpurlin or ridge beam (m)											
	1.8			2.7			3.6			4.2		
	Span	Fixing type		Span	Fixing type		Span	Fixing type		Span	Fixing type	
Wind zone		L	M		L	M		L	M		L	M
Underpurlin or ridge beam size												
(mm x mm) (Width x thickness)	(m)			(m)			(m)			(m)		
140 x 45	1.6	B	B	1.3	B	B	–	–	–	–	–	–
190 x 45	2.1	B	B	1.7	B	B	1.5	B	B	1.3	B	C
240 x 45	2.5	B	B	2.1	B	C	1.8	B	C	1.6	B	C
290 x 45	2.9	B	B	2.4	B	C	2.1	B	C	1.9	C	C
90 x 70	1.3	B	B	–	–	–	–	–	–	–	–	–
140 x 70	2.0	B	B	1.6	B	B	1.4	B	B	1.3	B	B
190 x 70	2.7	B	B	2.2	B	C	1.9	B	C	1.8	B	C
240 x 70	4.4	B	C	3.8	C	D	3.4	C	D	3.2	C	D
290 x 70	5.3	C	C	4.6	C	D	4.1	D	E	3.8	D	E
190 x 90	3.8	B	C	3.3	C	C	3.0	C	D	2.8	C	D
240 x 90	4.8	C	C	4.2	C	D	3.8	C	D	3.6	D	E
290 x 90	5.8	C	D	5.0	C	D	4.6	D	E	4.3	D	F

* For definition of loaded dimension see 1.3.

Fixing type	Fixing to resist uplift for underpurlins (For ridge beams refer to table 10.3 and figure 10.7)	Alternative fixing capacity (kN)
B	2/100 x 3.75 skewed nails + 1 wire dog	2.7
C	2/100 x 3.75 skewed nails + 2 wire dogs	4.7
D	2/100 x 3.75 skewed nails + 3 wire dogs	6.7
E	2/100 x 3.75 skewed nails + 4 wire dogs	8.7
F	2/100 x 3.75 skewed nails + U strap of 27 mm x 1.2 mm 10/30 x 3.15 nails at each end	16.0

NOTE –

(1) Span may be increased by 10 % for underpurlins continuous over 2 or more spans.

(2) Fixing types for continuous spans shall have double the capacity to that listed in the table.

(3) For the full range of underpurlin fixing types and capacities see table 10.13.

(4) Members 70 mm and 90 mm thick may be substituted with built-up members sized and nailed in accordance with 2.4.4.7.

Amd 2
May '06

Copyright Standards New Zealand

© The Crown in right of New Zealand, administered by the New Zealand Standards Executive. Access to this standard has been sponsored by the Ministry of Business, Innovation, and Employment under copyright license LN001498. You are not permitted to reproduce or distribute any part of this standard without prior written permission from Standards New Zealand, on behalf of New Zealand Standards Executive, unless your actions are covered by Part 3 of the Copyright Act 1994.

Table 10.6 – Underpurlins and ridge beams (see 10.2.1.5.2 and 10.2.1.9.1 and figures 10.10 and 10.11) **– No. 1 Framing and MSG 6**

(b) Light roof in high wind zones

Underpurlin or ridge beam size (Width x thickness)	Loaded dimension* of underpurlin or ridge beam (m)							
	1.8		2.7		3.6		4.2	
	Span	Fixing type	Span	Fixing type	Span	Fixing type	Span	Fixing type
(mm x mm)	(m)		(m)		(m)		(m)	
140 x 45	1.6	B	1.3	B	–	–	–	–
190 x 45	2.1	C	1.7	C	1.5	C	1.3	C
240 x 45	2.4	C	2.1	C	1.8	C	1.6	D
290 x 45	2.6	C	2.2	C	2.0	D	1.9	D
90 x 70	1.3	B	–	–	–	–	–	–
140 x 70	2.0	B	1.6	C	1.4	C	1.3	C
190 x 70	2.7	C	2.2	C	1.9	D	1.8	D
240 x 70	4.4	D	3.8	E	3.4	F	3.2	F
290 x 70	5.0	D	4.4	E	3.9	F	3.7	F
190 x 90	3.8	D	3.3	D	3.0	E	2.8	E
240 x 90	4.8	D	4.2	E	3.8	F	3.6	F
290 x 90	5.8	E	5.0	F	4.6	F	4.3	F

* For definition of loaded dimension see 1.3.

Fixing type	Fixing to resist uplift for underpurlins (For ridge beams refer to table 10.3 and figure 10.7)	Alternative fixing capacity (kN)
B	2/100 x 3.75 skewed nails + 1 wire dog	2.7
C	2/100 x 3.75 skewed nails + 2 wire dogs	4.7
D	2/100 x 3.75 skewed nails + 3 wire dogs	6.7
E	2/100 x 3.75 skewed nails + 4 wire dogs	8.7
F	2/100 x 3.75 skewed nails + U strap of 27 mm x 1.2 mm 10/30 x 3.15 nails at each end	16.0

NOTE –

(1) Span may be increased by 10 % for underpurlins continuous over 2 or more spans.

(2) Fixing types for continuous spans shall have double the capacity to that listed in the table.

(3) For the full range of underpurlin fixing types and capacities see table 10.13.

(4) Members 70 mm and 90 mm thick may be substituted with built-up members sized and nailed in accordance with 2.4.4.7.

Amd 2
May '06

Copyright Standards New Zealand

© The Crown in right of New Zealand, administered by the New Zealand Standards Executive. Access to this standard has been sponsored by the Ministry of Business, Innovation, and Employment under copyright license LN001498. You are not permitted to reproduce or distribute any part of this standard without prior written permission from Standards New Zealand, on behalf of New Zealand Standards Executive, unless your actions are covered by Part 3 of the Copyright Act 1994.

Table 10.6 – Underpurlins and ridge beams (see 10.2.1.5.2 and 10.2.1.9.1 and figures 10.10 and 10.11) **– No. 1 Framing and MSG 6**

(c) Light roof in very high wind zones

Underpurlin or ridge beam size (Width x thickness)	Loaded dimension* of underpurlin or ridge beam (m)							
	1.8		2.7		3.6		4.2	
	Span	Fixing type	Span	Fixing type	Span	Fixing type	Span	Fixing type
(mm x mm)	(m)		(m)		(m)		(m)	
140 x 45	1.6	C	1.3	C	–	–	–	–
190 x 45	1.9	C	1.6	C	1.4	D	1.3	D
240 x 45	2.2	C	1.9	D	1.7	D	1.6	D
290 x 45	2.3	C	2.0	D	1.8	D	1.7	E
90 x 70	1.2	B	–	–	–	–	–	–
140 x 70	1.9	C	1.6	C	1.4	D	1.3	D
190 x 70	2.7	C	2.2	D	1.9	D	1.8	E
240 x 70	4.2	E	3.6	F	3.2	F	3.0	F
290 x 70	4.6	E	4.0	F	3.6	F	3.3	F
190 x 90	3.7	D	3.2	E	2.9	F	2.7	F
240 x 90	4.6	E	4.0	F	3.7	F	3.5	F
290 x 90	5.6	F	4.9	F	4.4	F	–	–

* For definition of loaded dimension see 1.3.

Fixing type	Fixing to resist uplift for underpurlins (For ridge beams refer to table 10.3 and figure 10.7)	Alternative fixing capacity (kN)
B	2/100 x 3.75 skewed nails + 1 wire dog	2.7
C	2/100 x 3.75 skewed nails + 2 wire dogs	4.7
D	2/100 x 3.75 skewed nails + 3 wire dogs	6.7
E	2/100 x 3.75 skewed nails + 4 wire dogs	8.7
F	2/100 x 3.75 skewed nails + U strap of 27 mm x 1.2 mm 10/30 x 3.15 nails at each end	16.0

NOTE –

(1) Span may be increased by 10 % for underpurlins continuous over 2 or more spans.

(2) Fixing types for continuous spans shall have double the capacity to that listed in the table.

(3) For the full range of underpurlin fixing types and capacities see table 10.13.

(4) Members 70 mm and 90 mm thick may be substituted with built-up members sized and nailed in accordance with 2.4.4.7.

Amd 2
May '06

Copyright Standards New Zealand

© The Crown in right of New Zealand, administered by the New Zealand Standards Executive. Access to this standard has been sponsored by the Ministry of Business, Innovation, and Employment under copyright license LN001498. You are not permitted to reproduce or distribute any part of this standard without prior written permission from Standards New Zealand, on behalf of New Zealand Standards Executive, unless your actions are covered by Part 3 of the Copyright Act 1994.

Table 10.6 – Underpurlins and ridge beams (see 10.2.1.5.2 and 10.2.1.9.1 and figures 10.10 and 10.11) **– No. 1 Framing and MSG 6**

(d) Heavy roof in all wind zones

Underpurlin or ridge beam size (Width x thickness)	Loaded dimension* of underpurlin or ridge beam (m)																			
	1.8					2.7					3.6					4.2				
	Span	Fixing type				Span	Fixing type				Span	Fixing type				Span	Fixing type			
(mm x mm)	(m)	L	M	H	VH	(m)	L	M	H	VH	(m)	L	M	H	VH	(m)	L	M	H	VH
140 x 45	1.3	A	B	B	B	–	–	–	–	–	–	–	–	–	–	–	–	–	–	–
190 x 45	1.7	A	B	B	B	1.4	A	B	B	C	1.2	B	B	B	C	–	–	–	–	–
240 x 45	2.1	A	B	B	C	1.7	B	B	B	C	1.5	B	B	C	C	1.4	B	B	C	C
290 x 45	2.4	B	B	B	C	2.0	B	B	C	C	1.7	B	B	C	D	1.6	B	B	C	D
140 x 70	1.5	A	B	B	B	1.3	A	B	B	C	–	–	–	–	–	–	–	–	–	–
190 x 70	2.1	A	B	B	C	1.8	B	B	B	C	1.6	B	B	C	C	1.4	B	B	C	D
240 x 70	3.3	B	B	C	C	2.9	B	B	C	D	2.6	B	C	D	E	2.5	B	C	D	E
290 x 70	4.0	B	B	C	D	3.5	B	C	D	E	3.2	B	C	D	F	3.0	B	C	E	F
190 x 90	2.8	B	B	C	C	2.5	B	B	C	D	2.2	B	B	C	D	2.1	B	C	D	E
240 x 90	3.6	B	B	C	D	3.1	B	B	C	D	2.8	B	C	D	E	2.7	B	C	D	F
290 x 90	4.3	B	B	C	D	3.8	B	C	D	E	3.4	B	C	E	F	3.3	B	C	E	F

* For definition of loaded dimension see 1.3.

Fixing type	Fixing to resist uplift	Alternative fixing capacity (kN)
A	2/100 x 3.75 skewed nails	0.7
B	2/100 x 3.75 skewed nails + 1 wire dog	2.7
C	2/100 x 3.75 skewed nails + 2 wire dogs	4.7
D	2/100 x 3.75 skewed nails + 3 wire dogs	6.7
E	2/100 x 3.75 skewed nails + 4 wire dogs	8.7
F	2/100 x 3.75 skewed nails + U strap of 27 mm x 1.2 mm 10/30 x 3.15 nails at each end	16.0

NOTE –

(1) Span may be increased by 10 % for underpurlins continuous over 2 or more spans.

(2) Fixing types for continuous spans shall have double the capacity to that listed in the table.

(3) For the full range of underpurlin fixing types and capacities see table 10.13.

(4) For ridge beam to wall fixing use the fixing type determined from the upper table and select the appropriate fixing from table 10.3.

(5) Members 70 mm and 90 mm thick may be substituted with built-up members sized and nailed in accordance with 2.4.4.7.

Amd 2
May '06

Copyright Standards New Zealand

© The Crown in right of New Zealand, administered by the New Zealand Standards Executive. Access to this standard has been sponsored by the Ministry of Business, Innovation, and Employment under copyright license LN001498. You are not permitted to reproduce or distribute any part of this standard without prior written permission from Standards New Zealand, on behalf of New Zealand Standards Executive, unless your actions are covered by Part 3 of the Copyright Act 1994.

Table 10.6 – Underpurlins and ridge beams (see 10.2.1.5.2 and 10.2.1.9.1 and figures 10.10 and 10.11) **– VSG 8 and MSG 8**

(a) Light roof in low and medium wind zones

	Loaded dimension* of underpurlin or ridge beam (m)											
	1.8			2.7			3.6			4.2		
	Span	Fixing type		Span	Fixing type		Span	Fixing type		Span	Fixing type	
Wind zone		L	M		L	M		L	M		L	M
Underpurlin or ridge beam size												
(mm x mm) (Width x thickness)	(m)			(m)			(m)			(m)		
90 x 45	1.2	B	B	–	–	–	–	–	–	–	–	–
140 x 45	1.9	B	B	1.5	B	B	1.3	B	B	1.2	B	B
190 x 45	2.5	B	B	2.0	B	B	1.7	B	C	1.6	B	C
240 x 45	3.0	B	B	2.5	B	C	2.1	B	C	2.0	C	C
290 x 45	3.5	B	C	2.8	B	C	2.5	C	C	2.3	C	C
90 x 70	1.4	B	B	1.2	B	B	–	–	–	–	–	–
140 x 70	2.2	B	B	1.9	B	B	1.7	B	C	1.5	B	C
190 x 70	3.0	B	B	2.6	B	C	2.3	C	C	2.1	C	C
240 x 70	4.8	C	C	4.2	C	D	3.8	C	D	3.6	D	E
290 x 70	5.9	C	D	5.1	C	D	4.6	D	E	4.4	D	F
190 x 90	4.2	B	C	3.6	C	D	3.3	C	D	3.1	C	D
240 x 90	5.3	C	C	4.6	C	D	4.2	D	E	4.0	D	E
290 x 90	6.4	C	D	5.6	D	E	5.1	D	F	4.8	E	F

* For definition of loaded dimension see 1.3.

Fixing type	Fixing to resist uplift for underpurlins (For ridge beams refer to table 10.3 and figure 10.7)	Alternative fixing capacity (kN)
B	2/100 x 3.75 skewed nails + 1 wire dog	2.7
C	2/100 x 3.75 skewed nails + 2 wire dogs	4.7
D	2/100 x 3.75 skewed nails + 3 wire dogs	6.7
E	2/100 x 3.75 skewed nails + 4 wire dogs	8.7
F	2/100 x 3.75 skewed nails + U strap of 27 mm x 1.2 mm 10/30 x 3.15 nails at each end	16.0

NOTE –

(1) Span may be increased by 10 % for underpurlins continuous over 2 or more spans.

(2) Fixing types for continuous spans shall have double the capacity to that listed in the table.

(3) For the full range of underpurlin fixing types and capacities see table 10.13.

(4) Members 70 mm and 90 mm thick may be substituted with built-up members sized and nailed in accordance with 2.4.4.7.

Amd 2
May '06

Copyright Standards New Zealand

© The Crown in right of New Zealand, administered by the New Zealand Standards Executive. Access to this standard has been sponsored by the Ministry of Business, Innovation, and Employment under copyright license LN001498. You are not permitted to reproduce or distribute any part of this standard without prior written permission from Standards New Zealand, on behalf of New Zealand Standards Executive, unless your actions are covered by Part 3 of the Copyright Act 1994.

Table 10.6 – Underpurlins and ridge beams (see 10.2.1.5.2 and 10.2.1.9.1 and figures 10.10 and 10.11) **– VSG 8 and MSG 8**

(b) Light roof in high wind zones

Underpurlin or ridge beam size (Width x thickness)	Loaded dimension* of underpurlin or ridge beam (m)							
	1.8		2.7		3.6		4.2	
	Span	Fixing type	Span	Fixing type	Span	Fixing type	Span	Fixing type
(mm x mm)	(m)		(m)		(m)		(m)	
90 x 45	1.2	B	–	–	–	–	–	–
140 x 45	1.9	B	1.5	C	1.3	C	1.2	C
190 x 45	2.4	C	2.0	C	1.7	C	1.6	D
240 x 45	2.7	C	2.3	C	2.1	D	2.0	D
290 x 45	2.9	C	2.5	D	2.0	D	2.1	D
90 x 70	1.4	B	1.2	B	–	–	–	–
140 x 70	2.2	C	1.9	C	1.7	C	1.5	C
190 x 70	3.0	C	2.6	D	2.3	D	2.1	D
240 x 70	4.8	D	4.2	E	3.8	F	3.6	F
290 x 70	5.7	E	4.9	F	4.5	F	4.2	F
190 x 90	4.2	D	3.6	E	3.3	E	3.1	F
240 x 90	5.3	E	4.6	F	4.2	F	4.0	F
290 x 90	6.4	E	5.6	F	5.1	F	4.8	F

* For definition of loaded dimension see 1.3.

Fixing type	Fixing to resist uplift for underpurlins (For ridge beams refer to table 10.3 and figure 10.7)	Alternative fixing capacity (kN)
B	2/100 x 3.75 skewed nails + 1 wire dog	2.7
C	2/100 x 3.75 skewed nails + 2 wire dogs	4.7
D	2/100 x 3.75 skewed nails + 3 wire dogs	6.7
E	2/100 x 3.75 skewed nails + 4 wire dogs	8.7
F	2/100 x 3.75 skewed nails + U strap of 27 mm x 1.2 mm 10/30 x 3.15 nails at each end	16.0

NOTE –

(1) Span may be increased by 10 % for underpurlins continuous over 2 or more spans.

(2) Fixing types for continuous spans shall have double the capacity to that listed in the table.

(3) For the full range of underpurlin fixing types and capacities see table 10.13.

(4) Members 70 mm and 90 mm thick may be substituted with built-up members sized and nailed in accordance with 2.4.4.7.

Amd 2
May '06

Copyright Standards New Zealand

© The Crown in right of New Zealand, administered by the New Zealand Standards Executive. Access to this standard has been sponsored by the Ministry of Business, Innovation, and Employment under copyright license LN001498. You are not permitted to reproduce or distribute any part of this standard without prior written permission from Standards New Zealand, on behalf of New Zealand Standards Executive, unless your actions are covered by Part 3 of the Copyright Act 1994.

Table 10.6 – Underpurlins and ridge beams (see 10.2.1.5.2 and 10.2.1.9.1 and figures 10.10 and 10.11) **– VSG 8 and MSG 8**

(c) Light roof in very high wind zones

Underpurlin or ridge beam size (Width x thickness)	Loaded dimension* of underpurlin or ridge beam (m)							
	1.8		2.7		3.6		4.2	
	Span	Fixing type	Span	Fixing type	Span	Fixing type	Span	Fixing type
(mm x mm)	(m)		(m)		(m)		(m)	
90 x 45	1.2	B	–	–	–	–	–	–
140 x 45	1.8	B	1.5	C	1.3	C	1.2	D
190 x 45	2.2	C	1.9	D	1.7	D	1.6	D
240 x 45	2.4	C	2.1	D	1.9	D	1.8	E
290 x 45	2.6	C	2.3	D	2.0	E	1.9	E
90 x 70	1.4	B	1.2	C	–	–	–	–
140 x 70	2.2	C	1.9	D	1.7	D	1.5	D
190 x 70	2.9	D	2.6	D	2.3	E	2.1	E
240 x 70	4.7	E	4.1	F	3.7	F	3.4	F
290 x 70	5.1	F	4.5	F	4.0	F	3.8	F
190 x 90	4.0	E	3.5	F	3.2	F	3.0	F
240 x 90	5.1	F	4.5	F	4.1	F	3.9	F
290 x 90	6.2	F	5.4	F	–	–	–	–

* For definition of loaded dimension see 1.3.

Fixing type	Fixing to resist uplift for underpurlins (For ridge beams refer to table 10.3 and figure 10.7)	Alternative fixing capacity (kN)
B	2/100 x 3.75 skewed nails + 1 wire dog	2.7
C	2/100 x 3.75 skewed nails + 2 wire dogs	4.7
D	2/100 x 3.75 skewed nails + 3 wire dogs	6.7
E	2/100 x 3.75 skewed nails + 4 wire dogs	8.7
F	2/100 x 3.75 skewed nails + U strap of 27 mm x 1.2 mm 10/30 x 3.15 nails at each end	16.0

NOTE –

(1) Span may be increased by 10 % for underpurlins continuous over 2 or more spans.

(2) Fixing types for continuous spans shall have double the capacity to that listed in the table.

(3) For the full range of underpurlin fixing types and capacities see table 10.13.

(4) Members 70 mm and 90 mm thick may be substituted with built-up members sized and nailed in accordance with 2.4.4.7.

Amd 2
May '06

Copyright Standards New Zealand

© The Crown in right of New Zealand, administered by the New Zealand Standards Executive. Access to this standard has been sponsored by the Ministry of Business, Innovation, and Employment under copyright license LN001498. You are not permitted to reproduce or distribute any part of this standard without prior written permission from Standards New Zealand, on behalf of New Zealand Standards Executive, unless your actions are covered by Part 3 of the Copyright Act 1994.

Table 10.6 – Underpurlins and ridge beams (see 10.2.1.5.2 and 10.2.1.9.1 and figures 10.10 and 10.11) **– VSG 8 and MSG 8**

(d) Heavy roof in all wind zones

Underpurlin or ridge beam size (Width x thickness)	Loaded dimension* of underpurlin or ridge beam (m)																			
	1.8					2.7					3.6					4.2				
	Span	Fixing type				Span	Fixing type				Span	Fixing type				Span	Fixing type			
(mm x mm)	(m)	L	M	H	VH	(m)	L	M	H	VH	(m)	L	M	H	VH	(m)	L	M	H	VH
140 x 45	1.4	A	B	B	B	1.2	A	B	B	B	–	–	–	–	–	–	–	–	–	–
190 x 45	2.0	A	B	B	C	1.7	B	B	B	C	1.4	B	B	C	C	1.3	B	B	C	C
240 x 45	2.5	B	B	B	C	2.0	B	B	C	C	1.7	B	B	C	D	1.6	B	B	C	D
290 x 45	2.7	B	B	B	C	2.3	B	B	C	D	2.0	B	B	C	D	1.9	B	B	C	D
140 x 70	1.7	A	B	B	B	1.4	A	B	B	C	1.3	B	B	B	C	1.2	B	B	C	C
190 x 70	2.3	A	B	B	C	2.0	B	B	C	C	1.8	B	B	C	D	1.7	B	B	C	D
240 x 70	3.6	B	B	C	D	3.2	B	B	C	D	2.9	B	C	D	E	2.7	B	C	D	F
290 x 70	4.4	B	B	C	D	3.8	B	C	D	E	3.5	B	C	E	F	3.3	B	C	E	F
190 x 90	3.1	B	B	C	C	2.7	B	B	C	D	2.5	B	C	D	E	2.3	B	C	D	E
240 x 90	4.0	B	B	C	D	3.5	B	C	D	E	3.1	B	C	D	F	3.0	B	C	E	F
290 x 90	4.8	B	B	C	E	4.2	B	C	D	F	3.8	B	C	E	F	3.6	B	C	E	F

* For definition of loaded dimension see 1.3.

Fixing type	Fixing to resist uplift for underpurlins (For ridge beams refer to table 10.3 and figure 10.7)	Alternative fixing capacity (kN)
A	2/100 x 3.75 skewed nails	0.7
B	2/100 x 3.75 skewed nails + 1 wire dog	2.7
C	2/100 x 3.75 skewed nails + 2 wire dogs	4.7
D	2/100 x 3.75 skewed nails + 3 wire dogs	6.7
E	2/100 x 3.75 skewed nails + 4 wire dogs	8.7
F	2/100 x 3.75 skewed nails + U strap of 27 mm x 1.2 mm 10/30 x 3.15 nails at each end	16.0

NOTE –

(1) Span may be increased by 10 % for underpurlins continuous over 2 or more spans.

(2) Fixing types for continuous spans shall have double the capacity to that listed in the table.

(3) For the full range of underpurlin fixing types and capacities see table 10.13.

(4) Members 70 mm and 90 mm thick may be substituted with built-up members sized and nailed in accordance with 2.4.4.7.

Amd 2
May '06

Copyright Standards New Zealand

© The Crown in right of New Zealand, administered by the New Zealand Standards Executive. Access to this standard has been sponsored by the Ministry of Business, Innovation, and Employment under copyright license LN001498. You are not permitted to reproduce or distribute any part of this standard without prior written permission from Standards New Zealand, on behalf of New Zealand Standards Executive, unless your actions are covered by Part 3 of the Copyright Act 1994.

Table 10.6 – Underpurlins and ridge beams (see 10.2.1.5.2 and 10.2.1.9.1 and figures 10.10 and 10.11) **– VSG 10 and MSG 10**

(a) Light roof in low and medium wind zones

	Loaded dimension* of underpurlin or ridge beam (m)											
	1.8			2.7			3.6			4.2		
	Span	Fixing type		Span	Fixing type		Span	Fixing type		Span	Fixing type	
Wind zone		L	M		L	M		L	M		L	M
Underpurlin or ridge beam size												
(mm x mm) (Width x thickness)	(m)			(m)			(m)			(m)		
90 x 45	1.3	B	B	–	–	–	–	–	–	–	–	–
140 x 45	2.1	B	B	1.8	B	B	1.6	B	C	1.4	B	C
190 x 45	2.8	B	B	2.4	B	C	2.1	B	C	1.9	C	C
240 x 45	3.6	B	C	2.9	C	C	2.5	C	C	2.3	C	D
290 x 45	4.0	B	C	3.4	C	C	2.9	C	D	2.7	C	D
90 x 70	1.5	B	B	1.3	B	B	1.2	B	B	–	–	–
140 x 70	2.4	B	B	2.1	B	C	1.9	B	C	1.8	B	C
190 x 70	3.3	B	C	2.8	B	C	2.6	C	C	2.4	C	D
240 x 70	5.2	C	C	4.5	C	D	4.1	D	E	3.9	D	E
290 x 70	6.3	C	D	5.5	D	E	5.0	D	F	4.7	E	F
190 x 90	4.5	C	C	3.9	C	D	3.5	C	D	3.4	D	E
240 x 90	5.7	C	D	4.9	C	D	4.5	D	E	4.3	D	E
290 x 90	6.9	C	D	6.0	D	E	5.4	D	F	5.2	E	F

* For definition of loaded dimension see 1.3.

Fixing type	Fixing to resist uplift for underpurlins (For ridge beams refer to table 10.3 and figure 10.7)	Alternative fixing capacity (kN)
B	2/100 x 3.75 skewed nails + 1 wire dog	2.7
C	2/100 x 3.75 skewed nails + 2 wire dogs	4.7
D	2/100 x 3.75 skewed nails + 3 wire dogs	6.7
E	2/100 x 3.75 skewed nails + 4 wire dogs	8.7
F	2/100 x 3.75 skewed nails + U strap of 27 mm x 1.2 mm 10/30 x 3.15 nails at each end	16.0

NOTE –

(1) Span may be increased by 10 % for underpurlins continuous over 2 or more spans.

(2) Fixing types for continuous spans shall have double the capacity to that listed in the table.

(3) For the full range of underpurlin fixing types and capacities see table 10.13.

(4) Members 70 mm and 90 mm thick may be substituted with built-up members sized and nailed in accordance with 2.4.4.7.

Amd 2
May '06

Copyright Standards New Zealand

© The Crown in right of New Zealand, administered by the New Zealand Standards Executive. Access to this standard has been sponsored by the Ministry of Business, Innovation, and Employment under copyright license LN001498. You are not permitted to reproduce or distribute any part of this standard without prior written permission from Standards New Zealand, on behalf of New Zealand Standards Executive, unless your actions are covered by Part 3 of the Copyright Act 1994.

Table 10.6 – Underpurlins and ridge beams (see 10.2.1.5.2 and 10.2.1.9.1 and figures 10.10 and 10.11) **– VSG 10 and MSG 10**

(b) Light roof in high wind zones

Underpurlin or ridge beam size (Width x thickness)	Loaded dimension* of underpurlin or ridge beam (m)							
	1.8		2.7		3.6		4.2	
	Span	Fixing type	Span	Fixing type	Span	Fixing type	Span	Fixing type
(mm x mm)	(m)		(m)		(m)		(m)	
90 x 45	1.3	B	–	–	–	–	–	–
140 x 45	2.1	B	1.8	C	1.6	C	1.4	C
190 x 45	2.8	C	2.4	C	2.1	D	1.9	D
240 x 45	3.0	C	2.6	D	2.4	D	2.3	E
290 x 45	3.2	C	2.8	D	2.6	D	2.4	E
90 x 70	1.5	B	1.3	B	1.2	C	–	–
140 x 70	2.4	C	2.1	C	1.9	D	1.8	D
190 x 70	3.3	C	2.8	D	2.6	E	2.4	E
240 x 70	5.2	E	4.5	F	4.1	F	3.9	F
290 x 70	6.3	E	5.5	F	5.0	F	4.7	F
190 x 90	4.5	D	3.9	E	3.5	F	3.4	F
240 x 90	5.7	E	4.9	F	4.5	F	4.3	F
290 x 90	6.9	F	6.0	F	5.4	F	5.2	F

* For definition of loaded dimension see 1.3.

Fixing type	Fixing to resist uplift for underpurlins (For ridge beams refer to table 10.3 and figure 10.7)	Alternative fixing capacity (kN)
B	2/100 x 3.75 skewed nails + 1 wire dog	2.7
C	2/100 x 3.75 skewed nails + 2 wire dogs	4.7
D	2/100 x 3.75 skewed nails + 3 wire dogs	6.7
E	2/100 x 3.75 skewed nails + 4 wire dogs	8.7
F	2/100 x 3.75 skewed nails + U strap of 27 mm x 1.2 mm 10/30 x 3.15 nails at each end	16.0

NOTE –

(1) Span may be increased by 10 % for underpurlins continuous over 2 or more spans.

(2) Fixing types for continuous spans shall have double the capacity to that listed in the table.

(3) For the full range of underpurlin fixing types and capacities see table 10.13.

(4) Members 70 mm and 90 mm thick may be substituted with built-up members sized and nailed in accordance with 2.4.4.7.

Amd 2
May '06

© The Crown in right of New Zealand, administered by the New Zealand Standards Executive. Access to this standard has been sponsored by the Ministry of Business, Innovation, and Employment under copyright license LN001498. You are not permitted to reproduce or distribute any part of this standard without prior written permission from Standards New Zealand, on behalf of New Zealand Standards Executive, unless your actions are covered by Part 3 of the Copyright Act 1994.

Table 10.6 – Underpurlins and ridge beams (see 10.2.1.5.2 and 10.2.1.9.1 and figures 10.10 and 10.11) **– VSG 10 and MSG 10**

(c) Light roof in very high wind zones

Underpurlin or ridge beam size (Width x thickness)	Loaded dimension* of underpurlin or ridge beam (m)							
	1.8		2.7		3.6		4.2	
	Span	Fixing type	Span	Fixing type	Span	Fixing type	Span	Fixing type
(mm x mm)	(m)		(m)		(m)		(m)	
90 x 45	1.3	B	–	–	–	–	–	–
140 x 45	2.0	C	1.7	C	1.6	D	1.4	D
190 x 45	2.5	C	2.2	D	1.9	E	1.8	E
240 x 45	2.8	D	2.4	D	2.2	E	2.0	E
290 x 45	2.9	D	2.6	D	2.3	E	2.2	F
90 x 70	1.5	B	1.3	C	1.2	C	–	–
140 x 70	2.3	C	2.0	D	1.8	D	1.7	E
190 x 70	3.2	D	2.8	E	2.5	E	2.4	F
240 x 70	5.1	E	4.4	F	4.0	F	3.8	F
290 x 70	5.8	F	5.1	F	4.6	F	–	–
190 x 90	4.4	E	3.8	F	3.4	F	3.3	F
240 x 90	5.5	F	4.8	F	4.4	F	–	–
290 x 90	6.7	F	5.8	F	–	–	–	–

* For definition of loaded dimension see 1.3.

Fixing type	Fixing to resist uplift for underpurlins (For ridge beams refer to table 10.3 and figure 10.7)	Alternative fixing capacity (kN)
B	2/100 x 3.75 skewed nails + 1 wire dog	2.7
C	2/100 x 3.75 skewed nails + 2 wire dogs	4.7
D	2/100 x 3.75 skewed nails + 3 wire dogs	6.7
E	2/100 x 3.75 skewed nails + 4 wire dogs	8.7
F	2/100 x 3.75 skewed nails + U strap of 27 mm x 1.2 mm 10/30 x 3.15 nails at each end	16.0

NOTE –

(1) Span may be increased by 10 % for underpurlins continuous over 2 or more spans.

(2) Fixing types for continuous spans shall have double the capacity to that listed in the table.

(3) For the full range of underpurlin fixing types and capacities see table 10.13.

(4) Members 70 mm and 90 mm thick may be substituted with built-up members sized and nailed in accordance with 2.4.4.7.

Amd 2
May '06

Copyright Standards New Zealand

© The Crown in right of New Zealand, administered by the New Zealand Standards Executive. Access to this standard has been sponsored by the Ministry of Business, Innovation, and Employment under copyright license LN001498. You are not permitted to reproduce or distribute any part of this standard without prior written permission from Standards New Zealand, on behalf of New Zealand Standards Executive, unless your actions are covered by Part 3 of the Copyright Act 1994.

Table 10.6 – Underpurlins and ridge beams (see 10.2.1.5.2 and 10.2.1.9.1 and figures 10.10 and 10.11) **– VSG 10 and MSG 10**

(d) Heavy roof in all wind zones

Underpurlin or ridge beam size (Width x thickness))	Loaded dimension* of underpurlin or ridge beam (m)																			
	1.8					2.7					3.6					4.2				
	Span	Fixing type				Span	Fixing type				Span	Fixing type				Span	Fixing type			
(mm x mm)	(m)	L	M	H	VH	(m)	L	M	H	VH	(m)	L	M	H	VH	(m)	L	M	H	VH
140 x 45	1.5	A	B	B	B	1.3	A	B	B	C	1.2	B	B	B	C	–	–	–	–	–
190 x 45	2.1	A	B	B	C	1.8	B	B	C	C	1.7	B	B	C	D	1.6	B	B	C	D
240 x 45	2.7	B	B	B	C	2.3	B	B	C	D	2.1	B	B	C	D	1.9	B	B	C	D
290 x 45	3.1	B	B	C	C	2.7	B	B	C	D	2.4	B	B	C	D	2.2	B	C	D	E
140 x 70	1.8	A	B	B	B	1.6	A	B	B	C	1.4	B	B	C	C	1.3	B	B	C	C
190 x 70	2.4	B	B	B	C	2.1	B	B	C	C	1.9	B	B	C	D	1.8	B	B	C	D
240 x 70	3.9	B	B	C	D	3.4	B	C	D	E	3.1	B	C	D	F	2.9	B	C	E	F
290 x 70	4.7	B	B	C	D	4.1	B	C	D	E	3.8	B	C	E	F	3.6	B	C	E	F
190 x 90	3.4	B	B	C	D	2.9	B	B	C	D	2.7	B	C	D	E	2.5	B	C	D	E
240 x 90	4.3	B	B	C	D	3.7	B	C	D	E	3.4	B	C	D	F	3.2	B	C	E	F
290 x 90	5.2	B	C	D	E	4.5	B	C	E	F	4.1	B	C	E	F	3.9	B	D	F	F

* For definition of loaded dimension see 1.3.

Fixing type	Fixing to resist uplift for underpurlins (For ridge beams refer to table 10.3 and figure 10.7)	Alternative fixing capacity (kN)
A	2/100 x 3.75 skewed nails	0.7
B	2/100 x 3.75 skewed nails + 1 wire dog	2.7
C	2/100 x 3.75 skewed nails + 2 wire dogs	4.7
D	2/100 x 3.75 skewed nails + 3 wire dogs	6.7
E	2/100 x 3.75 skewed nails + 4 wire dogs	8.7
F	2/100 x 3.75 skewed nails + U strap of 27 mm x 1.2 mm 10/30 x 3.15 nails at each end	16.0

NOTE –

(1) Span may be increased by 10 % for underpurlins continuous over 2 or more spans.

(2) Fixing types for continuous spans shall have double the capacity to that listed in the table.

(3) For the full range of underpurlin fixing types and capacities see table 10.13.

(4) Members 70 mm and 90 mm thick may be substituted with built-up members sized and nailed in accordance with 2.4.4.7.

Amd 2
May '06

Copyright Standards New Zealand

© The Crown in right of New Zealand, administered by the New Zealand Standards Executive. Access to this standard has been sponsored by the Ministry of Business, Innovation, and Employment under copyright license LN001498. You are not permitted to reproduce or distribute any part of this standard without prior written permission from Standards New Zealand, on behalf of New Zealand Standards Executive, unless your actions are covered by Part 3 of the Copyright Act 1994.

10.2.1.9.3
The *underpurlin spacing* shall be the distance between the *underpurlin* and the adjacent *rafter* support, measured along the *rafter*.

10.2.1.10 *Underpurlin struts*

10.2.1.10.1
Underpurlin struts provided to support *underpurlins* shall be either:

(a) *Isolated struts*
Positioned at any angle between the vertical and at a right angle to the plane of the roof (see figure 10.10); or

(b) *As pairs*
Fixed to a common member and supporting 2 *underpurlins*. This common member shall be located at more than a quarter of the distance between the *underpurlins,* measured from either side of the building and within 300 mm centre-to-centre of a loadbearing wall (see figure 10.11(A)).

10.2.1.10.2
The maximum length of *underpurlins struts* shall be selected from the following:

Underpurlin struts			
	Timber grade		
	No.1 Framing MSG 6	VSG 8 MSG 8	VSG 10 MSG 10
Member size (mm)	**Maximum length** (m)		
90 x 45	1.45	1.60	1.70
90 x 70	3.15	3.45	3.65

Amd 2 May '06 NOTE – Members 70 mm thick may be substituted with built-up members sized and nailed in accordance with 2.4.4.7.

10.2.1.10.3
Underpurlin struts shall be directly supported by one of the following:

(a) The *top plate* of a *loadbearing wall*, provided that either:
(i) The *underpurlin strut* shall land directly over a *stud*; or
(ii) The *top plate* shall be doubled between the *studs* on each side of the *underpurlin strut*;

(b) A *lintel* complying with 8.6;

(c) A *strutting beam* complying with 10.2.1.11;

Amd 2 May '06 (d) A 90 mm x 45 mm timber *plate* laid on its flat on top of ceiling *joists* and within 300 mm of a *loadbearing wall*. The timber shall be fixed to at least 2 *joists* each side of the *underpurlin strut*.

10.2.1.10.4
Underpurlin struts shall be fixed to *underpurlins*, *strutting beams*, *top plates*, and *lintels* as shown in figures 10.10 and 10.11 together with those additional fixings listed in tables 10.6(a) to 10.6(d), depending on the weight of the roof and wind speed to which the building is subjected.

10.2.1.11 *Strutting beams*

10.2.1.11.1
Strutting beams shall be of the dimensions given by table 10.7 and figure 10.12.

Copyright Standards New Zealand

© The Crown in right of New Zealand, administered by the New Zealand Standards Executive. Access to this standard has been sponsored by the Ministry of Business, Innovation, and Employment under copyright license LN001498. You are not permitted to reproduce or distribute any part of this standard without prior written permission from Standards New Zealand, on behalf of New Zealand Standards Executive, unless your actions are covered by Part 3 of the Copyright Act 1994.

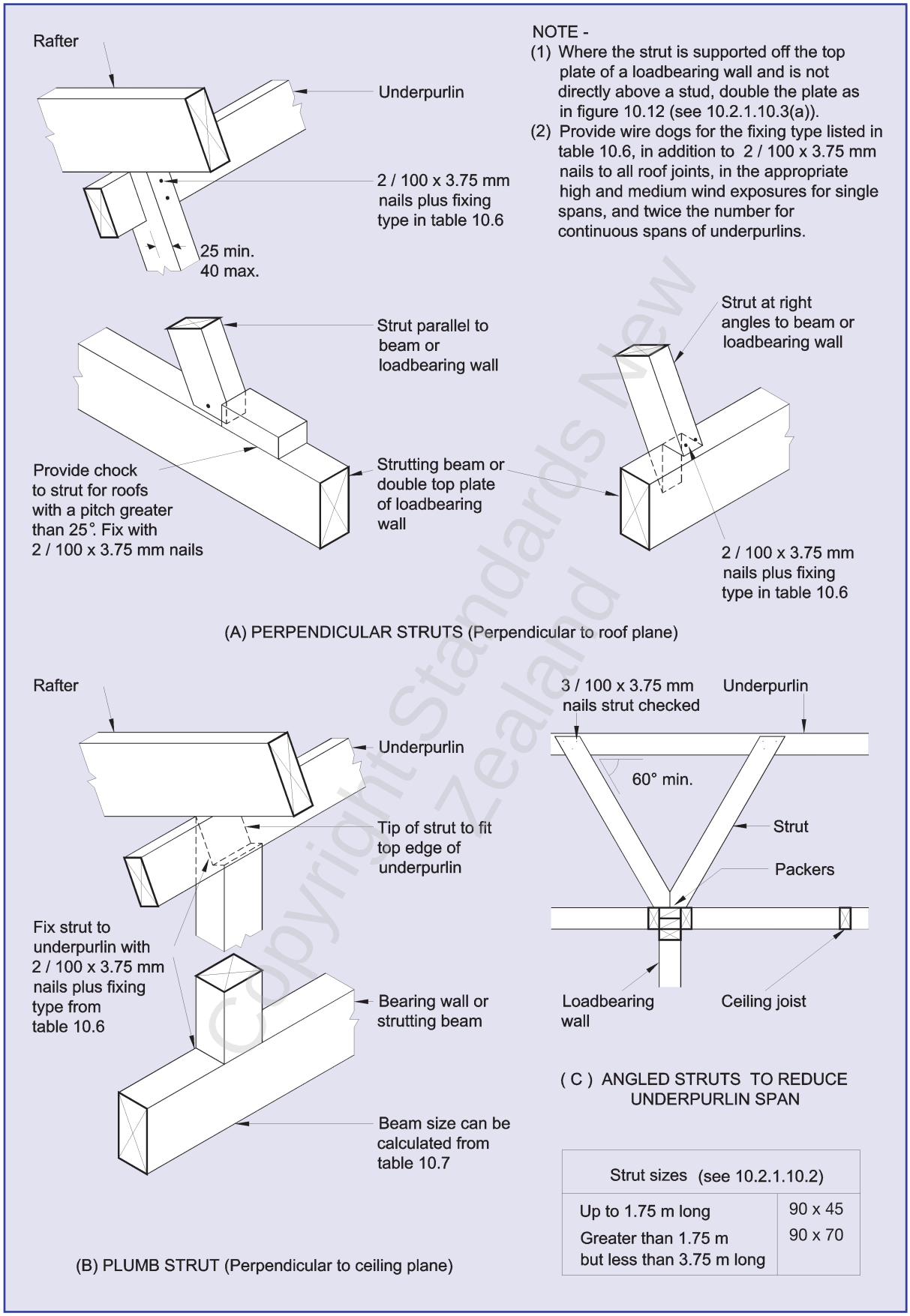

NOTE -

(1) Where the strut is supported off the top plate of a loadbearing wall and is not directly above a stud, double the plate as in figure 10.12 (see 10.2.1.10.3(a)).

(2) Provide wire dogs for the fixing type listed in table 10.6, in addition to 2 / 100 x 3.75 mm nails to all roof joints, in the appropriate high and medium wind exposures for single spans, and twice the number for continuous spans of underpurlins.

Strut sizes (see 10.2.1.10.2)	
Up to 1.75 m long	90 x 45
Greater than 1.75 m but less than 3.75 m long	90 x 70

Amd 2 May '06

Figure 10.10 – Underpurlin struts – Single (see 10.2.1.10.1(a))

Copyright Standards New Zealand

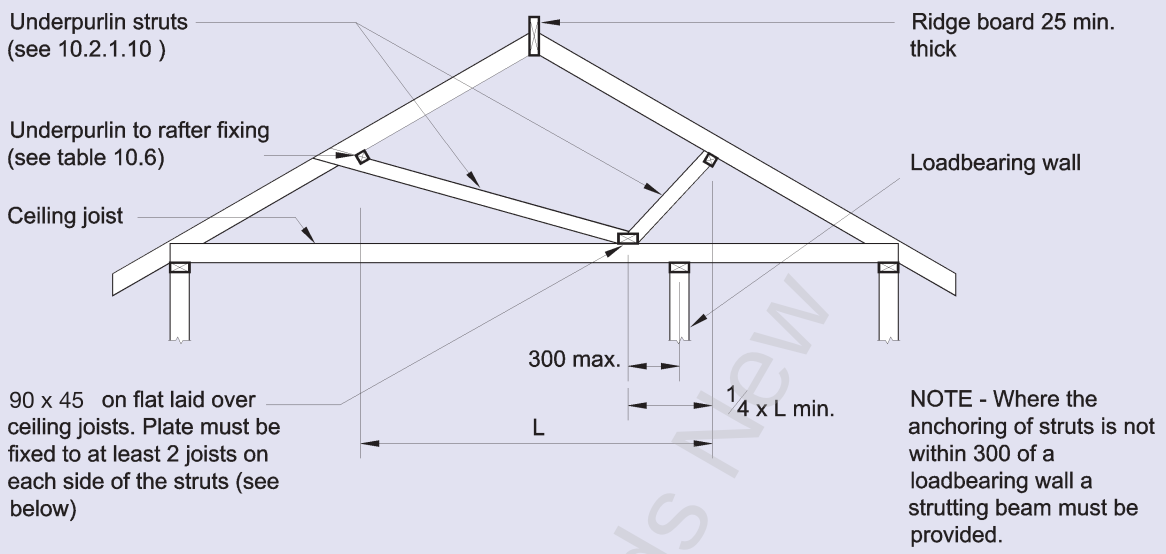

(A)

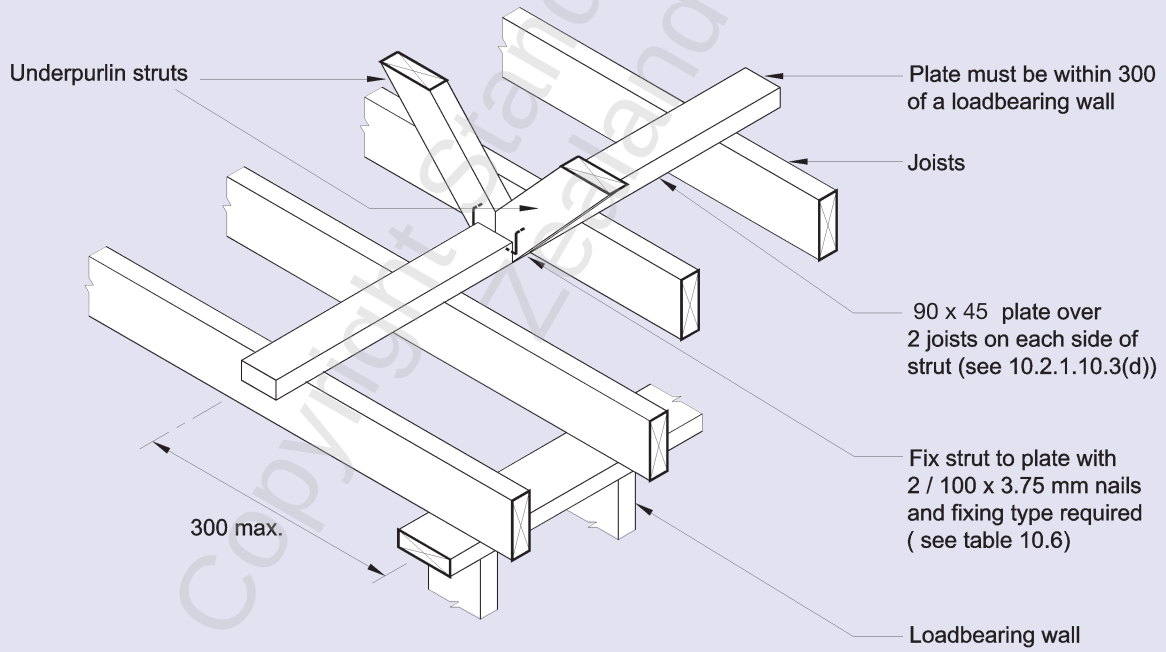

Strut sizes (see 10.2.1.10.2)	
Up to 1.75 m long	90 x 45
Greater than 1.75 m long but less than 3.75 m	90 x 70

(B)

Figure 10.11 – Underpurlin struts – Paired (see 10.2.1.10.1(b))

© The Crown in right of New Zealand, administered by the New Zealand Standards Executive. Access to this standard has been sponsored by the Ministry of Business, Innovation, and Employment under copyright license LN001498. You are not permitted to reproduce or distribute any part of this standard without prior written permission from Standards New Zealand, on behalf of New Zealand Standards Executive, unless your actions are covered by Part 3 of the Copyright Act 1994.

Copyright Standards New Zealand

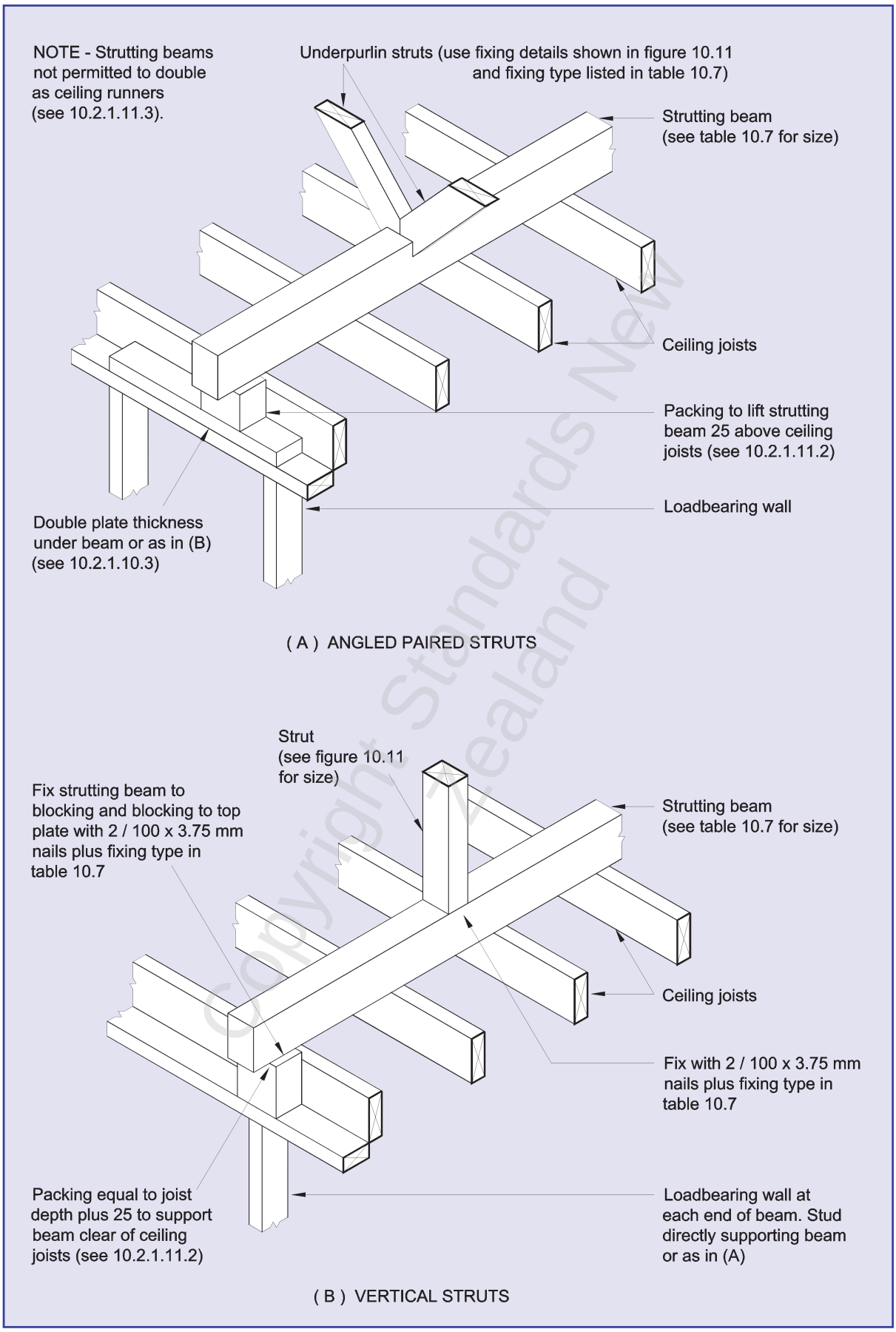

Figure 10.12 – Strutting beams (see 10.2.1.11.1)

© The Crown in right of New Zealand, administered by the New Zealand Standards Executive. Access to this standard has been sponsored by the Ministry of Business, Innovation, and Employment under copyright license LN001498. You are not permitted to reproduce or distribute any part of this standard without prior written permission from Standards New Zealand, on behalf of New Zealand Standards Executive, unless your actions are covered by Part 3 of the Copyright Act 1994.

© The Crown in right of New Zealand, administered by the New Zealand Standards Executive. Access to this standard has been sponsored by the Ministry of Business, Innovation, and Employment under copyright license LN001498. You are not permitted to reproduce or distribute any part of this standard without prior written permission from Standards New Zealand, on behalf of New Zealand Standards Executive, unless your actions are covered by Part 3 of the Copyright Act 1994.

Table 10.7 – Maximum span and fixing types for strutting beams (see 10.2.1.11) **– No. 1 Framing and MSG 6**

Strutting beam size (Width x thickness)	Maximum loaded dimension* of underpurlin	Spacing of struts (m)			
		1.8		2.7	
(mm x mm)	(m)	Span (m)	Fixing type	Span (m)	Fixing type
A Light weight roof					
140 x 90	1.8	1.4	D	–	–
190 x 90	1.8	2.7	E	1.8	E
	2.4	2.0	E	1.3	E
	2.7	1.8	E	1.2	E
B Heavy weight roof					
190 x 90	1.8	2.1	D	1.4	D
	2.4	1.6	D	–	–
	2.7	1.4	D	–	–

* For definition of loaded dimension see 1.3.

Fixing type	Fixing to resist uplift	Alternative fixing capacity (kN)
D	2/100 x 3.75 skewed nails + 3 wire dogs	6.7
E	2/100 x 3.75 skewed nails + 4 wire dogs	8.7

NOTE –

(1) Fixing types for continuous spans shall have double the capacity to that listed in the table.
(2) For the full range of fixing types and capacities see table 10.13.
(3) Members 90 mm thick may be substituted with built-up members sized and nailed in accordance with 2.4.4.7.

Amd 2
May '06

Copyright Standards New Zealand

© The Crown in right of New Zealand, administered by the New Zealand Standards Executive. Access to this standard has been sponsored by the Ministry of Business, Innovation, and Employment under copyright license LN001498. You are not permitted to reproduce or distribute any part of this standard without prior written permission from Standards New Zealand, on behalf of New Zealand Standards Executive, unless your actions are covered by Part 3 of the Copyright Act 1994.

Table 10.7 – Maximum span and fixing types for strutting beams (see 10.2.1.11) **– VSG 8 and MSG 8**

Strutting beam size (Width x thickness)	Maximum loaded dimension* of underpurlin	Spacing of struts (m)			
		1.8		2.7	
(mm x mm)	(m)	Span (m)	Fixing type	Span (m)	Fixing type
A Light weight roof					
140 x 90	1.8	2.0	D	1.3	D
	2.4	1.5	D	–	–
	2.7	1.3	D	0.9	D
190 x 90	1.8	3.3	F	2.5	F
	2.4	2.8	F	1.9	F
	2.7	2.5	F	1.7	F
B Heavy weight roof					
140 x 90	1.8	1.6	C	–	–
	2.4	1.2	C	–	–
190 x 90	1.8	2.5	D	2.0	E
	2.4	2.2	E	1.5	E
	2.7	2.0	E	1.3	E

* For definition of loaded dimension see 1.3.

Fixing type	Fixing to resist uplift	Alternative fixing capacity (kN)
C	2/100 x 3.75 skewed nails + 2 wire dogs	4.7
D	2/100 x 3.75 skewed nails + 3 wire dogs	6.7
E	2/100 x 3.75 skewed nails + 4 wire dogs	8.7
F	2/100 x 3.75 skewed nails + U strap of 27 mm x 1.2 mm 10/30 x 3.15 nails at each end	16.0

NOTE –

(1) Fixing types for continuous spans shall have double the capacity to that listed in the table.
(2) For the full range of fixing types and capacities see table 10.13.
(3) Members 90 mm thick may be substituted with built-up members sized and nailed in accordance with 2.4.4.7.

Amd 2
May '06

Copyright Standards New Zealand

© The Crown in right of New Zealand, administered by the New Zealand Standards Executive. Access to this standard has been sponsored by the Ministry of Business, Innovation, and Employment under copyright license LN001498. You are not permitted to reproduce or distribute any part of this standard without prior written permission from Standards New Zealand, on behalf of New Zealand Standards Executive, unless your actions are covered by Part 3 of the Copyright Act 1994.

Table 10.7 – Maximum span and fixing types for strutting beams (see 10.2.1.11) **– VSG 10 and MSG 10**

Strutting beam size (Width x thickness)	Maximum loaded dimension* of underpurlin	Spacing of struts (m)			
		1.8		2.7	
		Span	Fixing type	Span	Fixing type
(mm x mm)	(m)	(m)		(m)	
A Light weight roof					
140 x 90	1.8	2.3	E	1.9	F
	2.4	2.0	E	1.4	F
	2.7	1.9	F	1.3	F
190 x 90	1.8	3.7	F	3.0	F
	2.4	3.2	F	–	–
	2.7	3.0	F	–	–
B Heavy weight roof					
140 x 90	1.8	1.7	C	1.4	D
	2.4	1.5	D	–	–
190 x 90	1.8	2.8	E	2.3	F
	2.4	2.4	E	2.0	F
	2.7	2.3	F	1.8	F

* For definition of loaded dimension see 1.3.

Fixing type	Fixing to resist uplift	Alternative fixing capacity (kN)
C	2/100 x 3.75 skewed nails + 2 wire dogs	4.7
D	2/100 x 3.75 skewed nails + 3 wire dogs	6.7
E	2/100 x 3.75 skewed nails + 4 wire dogs	8.7
F	2/100 x 3.75 skewed nails + U strap of 27 mm x 1.2 mm 10/30 x 3.15 nails at each end	16.0

NOTE –

(1) Fixing types for continuous spans shall have double the capacity to that listed in the table.
(2) For the full range of fixing types and capacities see table 10.13.
(3) Members 90 mm thick may be substituted with built-up members sized and nailed in accordance with 2.4.4.7.

Amd 2
May '06

Copyright Standards New Zealand

© The Crown in right of New Zealand, administered by the New Zealand Standards Executive. Access to this standard has been sponsored by the Ministry of Business, Innovation, and Employment under copyright license LN001498. You are not permitted to reproduce or distribute any part of this standard without prior written permission from Standards New Zealand, on behalf of New Zealand Standards Executive, unless your actions are covered by Part 3 of the Copyright Act 1994.

10.2.1.11.2
Strutting beams shall have a clearance of not less than 25 mm above the ceiling *lining* or *framing.*

10.2.1.11.3
Strutting beams shall not be used as *ceiling runners.*

10.2.1.11.4
The ends of *strutting beams* may be chamfered provided that the depth of the *strutting beam* at its support shall not be reduced by more than 50 %.

10.2.1.11.5
Strutting beams shall have a minimum landing of 65 mm on a packer directly supported by one of the following:

(a) The *top plate* of a *loadbearing wall,* provided that either:

(i) The *strutting beam* shall land directly over a *stud;* or

(ii) The *top plate* shall be doubled between the *studs* on each side of the *strutting beam.*

(b) A *lintel* complying with 8.6.

10.2.1.12 *Verandah beams*
Verandah beams shall be of the dimensions given in table 10.8 (and table 15.8 for snow loads) in low to very high wind zones.

C10.2.1.12
Verandah beams are subject to high uplift wind forces from below and above the rafters. Lightweight roofs are affected by higher uplift forces than are heavy roofs.

10.2.1.13 *Collar ties and cleats*

10.2.1.13.1
In *couple-close roofs* steeper than 10° to the horizontal (1 in 6), pairs of *rafters* shall be connected by the following (see figures 10.13 and 10.14):

(a) Where *underpurlins* are used: *Collar ties* complying with 10.2.1.13.2;

(b) Where *underpurlins* are not used: *Cleats* complying with 10.2.1.13.3.

C10.2.1.13.1
Collar ties provide horizontal restraint to the horizontal reaction of underpurlin struts supporting underpurlins. They cannot be used without a ceiling joist connection to the base of the rafters, unless on its own, as a roof structure member. Rafters, collar ties, and all connections should be specifically designed to resist loads and deflections.

Copyright Standards New Zealand

© The Crown in right of New Zealand, administered by the New Zealand Standards Executive. Access to this standard has been sponsored by the Ministry of Business, Innovation, and Employment under copyright license LN001498. You are not permitted to reproduce or distribute any part of this standard without prior written permission from Standards New Zealand, on behalf of New Zealand Standards Executive, unless your actions are covered by Part 3 of the Copyright Act 1994.

Table 10.8 – Verandah beams (see 10.2.1.12) **– No. 1 Framing and MSG 6**

Beam size (Width x thickness)	Loaded dimension of verandah beam (m)							
	0.9		1.4		1.8		2.1	
	Span	Fixing type	Span	Fixing type	Span	Fixing type	Span	Fixing type
(mm x mm)	(m)		(m)		(m)		(m)	
A Light roof in low to very high wind zone								
140 x 45	1.7	CC	1.2	CC	–	–	–	–
190 x 45	2.0	CC	1.5	CC	1.4	DD	1.3	DD
240 x 45	2.3	CC	1.8	DD	1.6	DD	1.5	DD
290 x 45	2.4	CC	1.9	DD	1.8	DD	1.7	EE
140 x 70	2.0	CC	1.5	CC	1.4	DD	1.3	DD
190 x 70	2.8	CC	2.1	DD	1.9	EE	1.8	EE
240 x 70	3.4	DD	2.5	EE	2.3	EE	2.2	FF
290 x 70	3.7	DD	2.9	EE	2.6	FF	2.5	FF
140 x 90	2.2	CC	1.8	DD	1.6	DD	1.5	DD
190 x 90	3.0	CC	2.4	EE	2.1	EE	2.0	EE
240 x 90	3.8	DD	3.0	FF	2.7	FF	2.5	FF
290 x 90	5.8	FF	4.7	FF	4.3	FF	4.1	FF
B Heavy roof in low to very high wind zone								
140 x 45	1.4	CC	–	–	–	–	–	–
190 x 45	1.8	CC	1.3	CC	1.2	CC	–	–
240 x 45	2.0	CC	1.6	CC	1.4	CC	1.3	DD
290 x 45	2.2	CC	1.7	CC	1.6	DD	1.5	DD
140 x 70	1.6	CC	1.3	CC	1.2	CC	–	–
190 x 70	2.2	CC	1.8	CC	1.6	DD	1.5	DD
240 x 70	2.8	CC	2.2	DD	2.0	DD	1.9	DD
290 x 70	3.3	CC	2.5	DD	2.3	EE	2.2	EE
140 x 90	1.8	CC	1.4	CC	1.3	CC	1.2	CC
190 x 90	2.4	CC	1.9	DD	1.8	DD	1.7	DD
240 x 90	3.1	CC	2.4	DD	2.3	EE	2.1	EE
290 x 90	4.7	DD	3.7	FF	3.5	FF	3.3	FF

Fixing type	Fixing to resist uplift	Alternative fixing capacity (kN)
CC	6/100 x 3.75 nails	4.7
DD	1/M12 bolt	6.7
EE	1/M12 bolt	8.7
FF	3/M12 bolts or 2/M16 bolts	18.6

NOTE –
(1) This table includes provision for the rafters cantilevering a maximum of 750 mm beyond the verandah beam to support a soffit.
(2) Fixing type for continuous spans shall have a double capacity to that listed in the table.
(3) Members 70 mm and 90 mm thick may be substituted with built-up members sized and nailed in accordance with 2.4.4.7.

Amd 2
May '06

Copyright Standards New Zealand

© The Crown in right of New Zealand, administered by the New Zealand Standards Executive. Access to this standard has been sponsored by the Ministry of Business, Innovation, and Employment under copyright license LN001498. You are not permitted to reproduce or distribute any part of this standard without prior written permission from Standards New Zealand, on behalf of New Zealand Standards Executive, unless your actions are covered by Part 3 of the Copyright Act 1994.

Table 10.8 – Verandah beams (see 10.2.1.12) **– VSG 8 and MSG 8**

Beam size (Width x thickness)	Loaded dimension of verandah beam (m)							
	0.9		1.4		1.8		2.1	
	Span	Fixing type	Span	Fixing type	Span	Fixing type	Span	Fixing type
(mm x mm)	(m)		(m)		(m)		(m)	
A Light roof in low to very high wind zone								
140 x 45	1.9	CC	1.4	CC	1.3	DD	1.2	DD
190 x 45	2.3	CC	1.8	DD	1.6	DD	1.5	DD
240 x 45	2.5	CC	2.0	DD	1.8	EE	1.8	EE
290 x 45	2.7	CC	2.2	DD	2.0	EE	1.9	EE
140 x 70	2.2	CC	1.8	DD	1.6	DD	1.5	DD
190 x 70	3.1	CC	2.4	EE	2.2	EE	2.1	FF
240 x 70	3.9	DD	2.9	EE	2.7	FF	2.5	FF
290 x 70	4.2	DD	3.3	FF	3.0	FF	2.9	FF
140 x 90	2.4	CC	2.0	DD	1.8	EE	1.7	EE
190 x 90	3.3	DD	2.7	EE	2.5	FF	2.4	FF
240 x 90	4.2	DD	3.4	FF	3.1	FF	3.0	FF
290 x 90	6.5	FF	5.2	FF	4.8	FF	–	–
B Heavy roof in low to very high wind zone								
140 x 45	1.5	CC	1.2	CC	–	–	–	–
190 x 45	2.0	CC	1.5	CC	1.4	CC	1.3	DD
240 x 45	2.3	CC	1.8	CC	1.6	DD	1.5	DD
290 x 45	2.4	CC	1.9	DD	1.8	DD	1.7	DD
140 x 70	1.8	CC	1.4	CC	1.3	CC	1.3	CC
190 x 70	2.4	CC	2.0	DD	1.8	DD	1.7	DD
240 x 70	3.1	CC	2.5	DD	2.3	EE	2.2	EE
290 x 70	3.7	DD	2.9	EE	2.6	EE	2.5	FF
140 x 90	2.0	CC	1.6	CC	1.4	CC	1.4	DD
190 x 90	2.7	CC	2.1	DD	2.0	DD	1.9	DD
240 x 90	3.4	CC	2.7	DD	2.5	EE	2.4	EE
290 x 90	5.2	DD	4.1	FF	3.8	FF	3.7	FF

Fixing type	Fixing to resist uplift	Alternative fixing capacity (kN)
CC	6/100 x 3.75 nails	4.7
DD	1/M12 bolt	6.7
EE	1/M12 bolt	8.7
FF	3/M12 bolts or 2/M16 bolts	18.6

NOTE –

(1) This table includes provision for the rafters cantilevering a maximum of 750 mm beyond the verandah beam to support a soffit.

(2) Fixing type for continuous spans shall have a double capacity to that listed in the table.

(3) Members 70 mm and 90 mm thick may be substituted with built-up members sized and nailed in accordance with clause 2.4.4.7.

Amd 2
May '06

Copyright Standards New Zealand

© The Crown in right of New Zealand, administered by the New Zealand Standards Executive. Access to this standard has been sponsored by the Ministry of Business, Innovation, and Employment under copyright license LN001498. You are not permitted to reproduce or distribute any part of this standard without prior written permission from Standards New Zealand, on behalf of New Zealand Standards Executive, unless your actions are covered by Part 3 of the Copyright Act 1994.

Table 10.8 – Verandah beams (see 10.2.1.12) **– VSG 10 and MSG 10**

Beam size (Width x thickness)	Loaded dimension of verandah beam (m)							
	0.9		1.4		1.8		2.1	
	Span	Fixing type	Span	Fixing type	Span	Fixing type	Span	Fixing type
(mm x mm)	(m)		(m)		(m)		(m)	
A Light roof in low to very high wind zone								
140 x 45	2.1	CC	1.7	DD	1.5	DD	1.4	DD
190 x 45	2.6	CC	2.0	DD	1.9	EE	1.8	EE
240 x 45	2.9	CC	2.3	EE	2.1	EE	2.0	EE
290 x 45	3.1	CC	2.5	EE	2.3	EE	2.2	FF
140 x 70	2.4	CC	1.9	DD	1.8	DD	1.7	EE
190 x 70	3.3	DD	2.6	EE	2.4	FF	2.3	FF
240 x 70	4.2	DD	3.3	FF	3.1	FF	2.9	FF
290 x 70	4.8	EE	3.8	FF	3.5	FF	3.4	FF
140 x 90	2.6	CC	2.1	DD	1.9	EE	1.9	EE
190 x 90	3.6	DD	2.9	EE	2.7	FF	2.5	FF
240 x 90	4.5	EE	3.6	FF	3.4	FF	3.2	FF
290 x 90	6.9	FF	5.6	FF	–	–	–	–
B Heavy roof in low to very high wind zone								
140 x 45	1.7	CC	1.3	CC	1.2	CC	1.2	CC
190 x 45	2.3	CC	1.8	CC	1.6	DD	1.6	DD
240 x 45	2.6	CC	2.0	DD	1.9	DD	1.8	DD
290 x 45	2.7	CC	2.2	DD	2.0	DD	1.9	EE
140 x 70	1.9	CC	1.5	CC	1.4	CC	1.4	DD
190 x 70	2.6	CC	2.1	DD	1.9	DD	1.9	DD
240 x 70	3.3	CC	2.7	DD	2.5	EE	2.4	EE
290 x 70	4.0	DD	3.2	EE	3.0	FF	2.9	FF
140 x 90	2.1	CC	1.7	CC	1.6	DD	1.5	DD
190 x 90	2.9	CC	2.3	DD	2.1	DD	2.0	EE
240 x 90	3.6	CC	2.9	EE	2.7	EE	2.6	FF
290 x 90	5.6	EE	4.4	FF	4.1	FF	3.9	FF

Fixing type	Fixing to resist uplift	Alternative fixing capacity (kN)
CC	6/100 x 3.75 nails	4.7
DD	1/M12 bolt	6.7
EE	1/M12 bolt	8.7
FF	3/M12 bolts or 2/M16 bolts	18.6

NOTE –
(1) This table includes provision for the rafters cantilevering a maximum of 750 mm beyond the verandah beam to support a soffit.
(2) Fixing type for continuous spans shall have a double capacity to that listed in the table.
(3) Members 70 mm and 90 mm thick may be substituted with built-up members sized and nailed in accordance with 2.4.4.7.

Amd 2
May '06

Copyright Standards New Zealand

© The Crown in right of New Zealand, administered by the New Zealand Standards Executive. Access to this standard has been sponsored by the Ministry of Business, Innovation, and Employment under copyright license LN001498. You are not permitted to reproduce or distribute any part of this standard without prior written permission from Standards New Zealand, on behalf of New Zealand Standards Executive, unless your actions are covered by Part 3 of the Copyright Act 1994.

10.2.1.13.2
Collar ties shall (see figure 10.13):

(a) Be at 1.8 m centres or every third pair of *rafters,* whichever is the closer;

(b) Be fixed to the sides of the *rafters* immediately above each *underpurlin;*

(c) Consist of 140 mm x 19 mm or 90 mm x 45 mm timber.

Amd 2 May '06

10.2.1.13.3
Cleats shall (see figure 10.14):

(a) Be at 1.8 m centres or every third pair of *rafters,* whichever is the closer;

(b) Be fixed to the sides of the *rafters* immediately beneath the *ridge board;*

(c) Consist of 90 mm x 19 mm timber.

Amd 2 May '06

10.2.1.14 *Eaves*

10.2.1.14.1
A *rafter* may extend as a cantilever beyond its supporting *top plate* for a distance not exceeding one quarter of its maximum permitted span, or 750 mm measured horizontally from the face of the support, whichever is the lesser. Where 90 mm x 45 mm *rafters* are supported by *eaves bearers* (boxed) they may extend to 750 mm.

C10.2.1.14.1
The eaves of truss roofs are covered by the design requirements of 10.2.2.

Amd 2 May '06

10.2.1.14.2
Where the eaves are boxed, the *eaves bearers* shall be attached to the ends of *rafters* or trusses and to *studs* or *ribbon boards,* and shall be at not more than 1200 mm centres.

10.2.1.14.3
Eaves bearers shall consist of:

(a) Not exceeding 600 mm long: 45 mm x 35 mm timber;

(b) Not exceeding 750 mm long: 70 mm x 35 mm timber on edge.

Amd 2 May '06

10.2.1.15 *Gable verges*

10.2.1.15.1
Gable verges shall be framed by either:

(a) *Purlins* extending as cantilevers beyond their end supports as shown in figure 10.15 for a distance not exceeding that given by 10.2.1.15.2; or

(b) Outriggers complying with 10.2.1.15.3 and as shown in figure 10.15.

Copyright Standards New Zealand

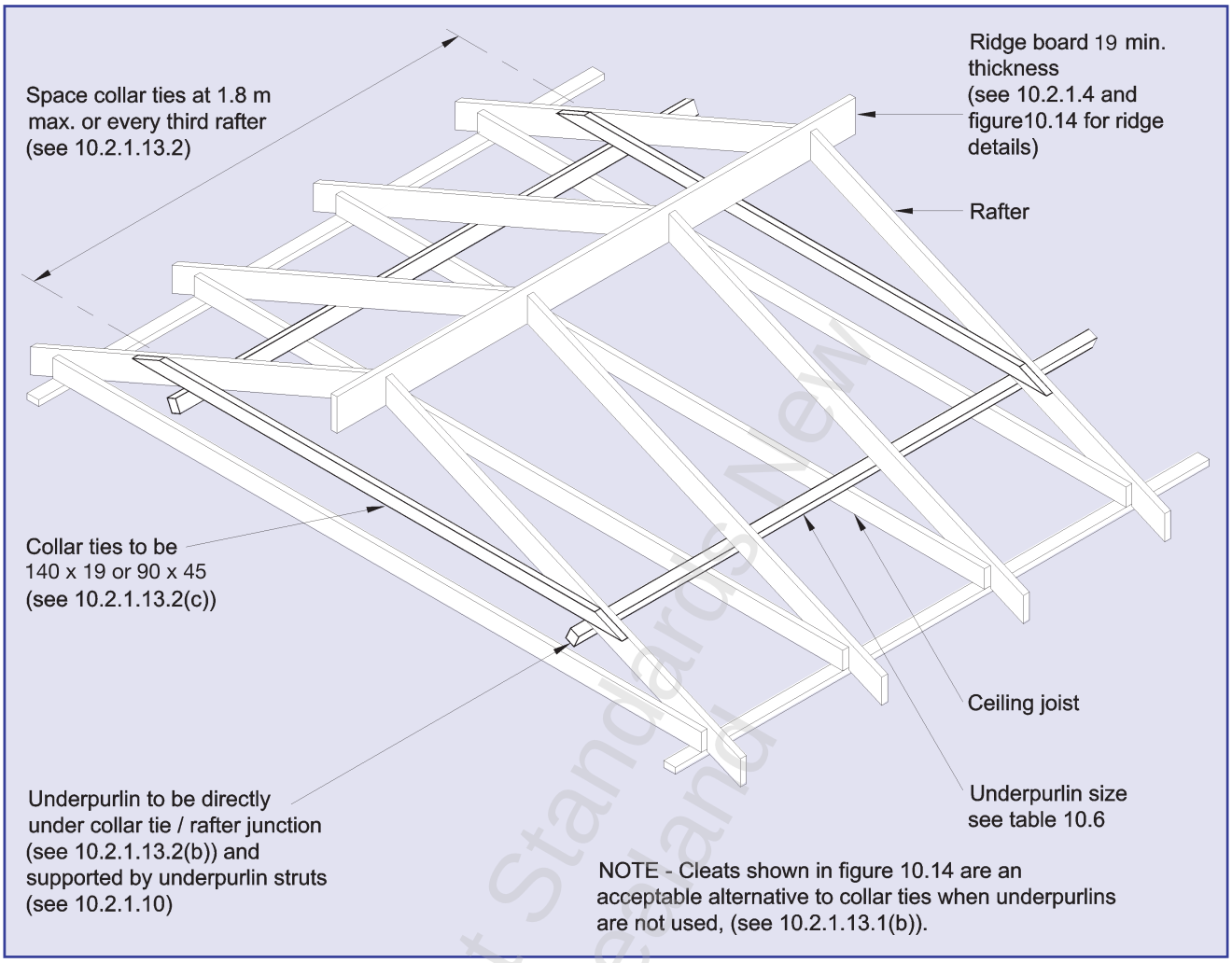

Figure 10.13 – Collar ties and underpurlins – Roof pitches greater than 10°
(see 10.2.1.13.1 and 10.2.1.13.2)

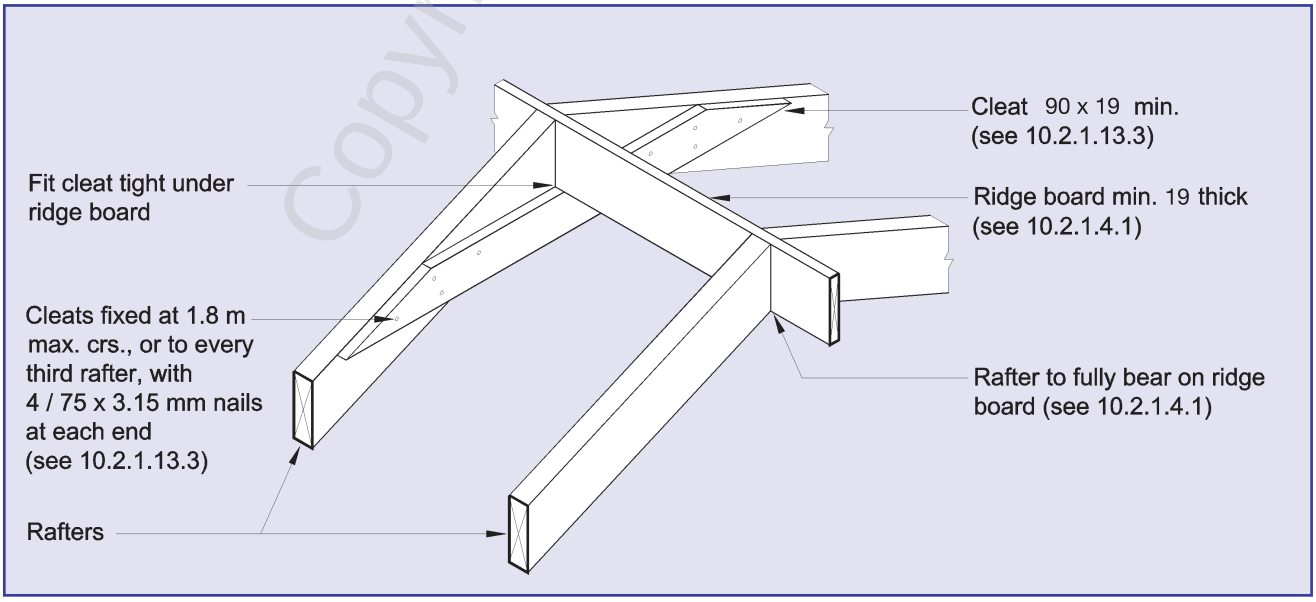

Figure 10.14 – Fixing cleats (see 10.2.1.13.1 and 10.2.1.13.3)

© The Crown in right of New Zealand, administered by the New Zealand Standards Executive. Access to this standard has been sponsored by the Ministry of Business, Innovation, and Employment under copyright license LN001498. You are not permitted to reproduce or distribute any part of this standard without prior written permission from Standards New Zealand, on behalf of New Zealand Standards Executive, unless your actions are covered by Part 3 of the Copyright Act 1994.

Copyright Standards New Zealand

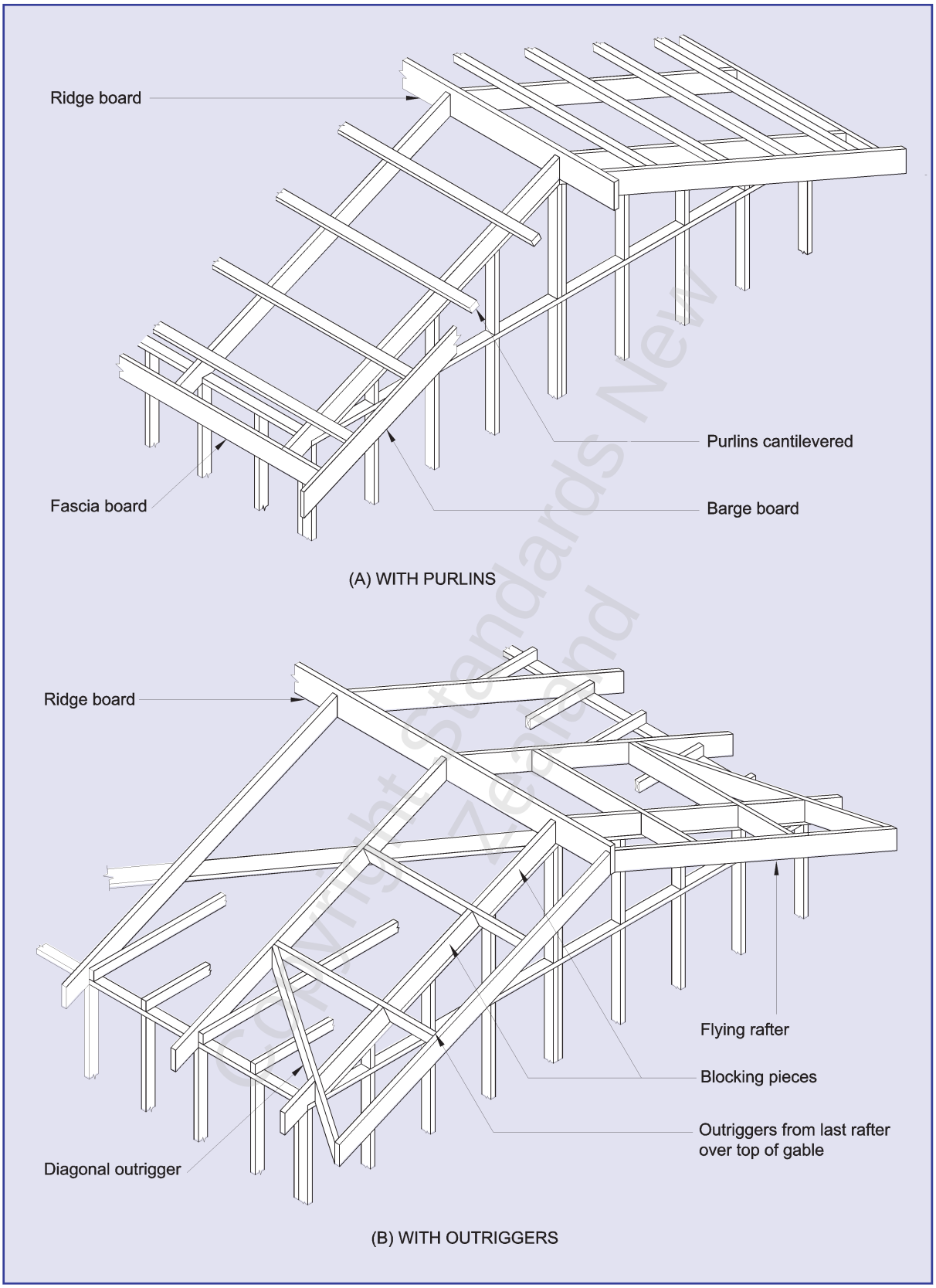

Figure 10.15 – Gable verge framing (see 10.2.1.15.1)

© The Crown in right of New Zealand, administered by the New Zealand Standards Executive. Access to this standard has been sponsored by the Ministry of Business, Innovation, and Employment under copyright license LN001498. You are not permitted to reproduce or distribute any part of this standard without prior written permission from Standards New Zealand, on behalf of New Zealand Standards Executive, unless your actions are covered by Part 3 of the Copyright Act 1994.

© The Crown in right of New Zealand, administered by the New Zealand Standards Executive. Access to this standard has been sponsored by the Ministry of Business, Innovation, and Employment under copyright license LN001498. You are not permitted to reproduce or distribute any part of this standard without prior written permission from Standards New Zealand, on behalf of New Zealand Standards Executive, unless your actions are covered by Part 3 of the Copyright Act 1994.

10.2.1.15.2

Purlins with a back span over at least 3 *rafters* may extend as cantilevers beyond their end supports for a distance not exceeding:

(a) Laid on their flat:

(i) *Light roofs*
45 mm x 45 mm *purlins:* 300 mm
70 mm x 45 mm *purlins:* 500 mm
90 mm x 45 mm *purlins :* 600 mm

(ii) *Heavy roofs*
45 mm x 45 mm *purlins* at 400 mm centres: 300 mm
70 mm x 45 mm *purlins* at 400 mm centres: 400 mm
90 mm x 45 mm *purlins* at 400 mm centres: 500 mm

(b) Laid on their edge:

(i) *Light roofs*
70 mm x 45 mm *purlins:* 600 mm
90 mm x 45 mm *purlins:* 700 mm

(ii) *Heavy roofs*
70 mm x 45 mm *purlins* at 400 mm centres: 500 mm
90 mm x 45 mm *purlins* at 400 mm centres: 600 mm

10.2.1.15.3

Outriggers shall (see figure 10.15):

(a) Be laid on edge and be of minimum size 90 mm x 35 mm;

(b) Be located at not more than 900 mm centres;

(c) Extend beyond their end supports for a distance not exceeding 600 mm;

(d) Have a flying *rafter* of minimum size 90 mm x 35 mm fixed to their ends;

(e) Have *blocking* pieces of the same size as the outriggers fitted and fixed between the outriggers along the line of the end support. *Purlins* shall be fixed to the *blocking* pieces and to the flying *rafter.*

(f) Be fixed to wall *framing* with fixings determined from table 10.9 as if the outriggers are *purlins.*

Amd 2
May '06

Copyright Standards New Zealand

© The Crown in right of New Zealand, administered by the New Zealand Standards Executive. Access to this standard has been sponsored by the Ministry of Business, Innovation, and Employment under copyright license LN001498. You are not permitted to reproduce or distribute any part of this standard without prior written permission from Standards New Zealand, on behalf of New Zealand Standards Executive, unless your actions are covered by Part 3 of the Copyright Act 1994.

Table 10.9 – Purlins or tile battens (see 10.2.1.16.1) **– No. 1 Framing and MSG 6**

(a) Light roof cladding (see figures 10.16 and 10.17)

	Maximum span	Maximum spacing and fixing loads in the following wind zones											
		Low			Medium			High			Very high		
		Spacing	Fixing capacity		Spacing	Fixing capacity		Spacing	Fixing capacity		Spacing	Fixing capacity	
			M(1)	P(1)		M(1)	P(1)		M(1)	P(1)		M(1)	P(1)
(mm x mm)	(mm)	(mm)	(kN)	(kN)	(mm)	(kN)	(kN)	(mm)	(kN)	(kN)	(mm)	(kN)	(kN)
Tile batten size													
50 x 40	900	400	0.3	0.4	400	0.4	0.5	400	0.5	0.8	400	0.7	1.0
50 x 50	1200	400	0.4	0.5	400	0.5	0.7	400	0.7	1.0	400	0.9	1.3
Purlin size													
70 x 45	900	900	0.5	0.8	900	0.7	1.1	900	1.0	1.5	800	1.2	1.8
70 x 45	900	1200	0.7	1.0	1200	1.0	1.4	1000	1.1	1.7	800	1.2	1.8
70 x 45	900	1800	1.0	1.5	1500	1.2	1.8	1000	1.1	1.7	800	1.2	1.8
70 x 45	1200	1000	0.8	1.2	800	0.9	1.3	600	0.9	1.4	–	–	–
90 x 45	1200	1300	1.0	1.5	1000	1.1	1.6	700	1.1	1.6	–	–	–

NOTE –
(1) M = Main roof; P = Periphery (see figures 10.16 and 10.17).
(2) Fixings with the capacity required by the table shall be selected from table 10.10.
(3) Batten sizes are sawn timber.
(4) Purlin and batten sizes are on the flat.

(b) Heavy roof cladding

Tile batten size	Maxiumum span	Spacing	Fixing loads (all wind areas; all roof areas)
(mm x mm)	(mm)	(mm)	(kN)
50 x 25	480	400	0.4
50 x 40	600	400	0.4
50 x 50	900	400	0.4

NOTE –
(1) Fixings with the capacity required by the table shall be selected from table 10.10.
(2) Batten sizes are sawn timber.
(3) Batten sizes are on the flat.

Amd 2
May '06

Copyright Standards New Zealand

© The Crown in right of New Zealand, administered by the New Zealand Standards Executive. Access to this standard has been sponsored by the Ministry of Business, Innovation, and Employment under copyright license LN001498. You are not permitted to reproduce or distribute any part of this standard without prior written permission from Standards New Zealand, on behalf of New Zealand Standards Executive, unless your actions are covered by Part 3 of the Copyright Act 1994.

Table 10.9 – Purlins (see 10.2.1.16.1) **– VSG 8 and MSG 8**

(a) Light roof cladding (see figures 10.16 and 10.17)

Purlin size	Maximum span	Maximum spacing and fixing loads in the following wind zones											
		Low			Medium			High			Very high		
		Spacing	Fixing capacity		Spacing	Fixing capacity		Spacing	Fixing capacity		Spacing	Fixing capacity	
			M(1)	P(1)		M(1)	P(1)		M(1)	P(1)		M(1)	P(1)
(mm x mm)	(mm)	(mm)	(kN)	(kN)	(mm)	(kN)	(kN)	(mm)	(kN)	(kN)	(mm)	(kN)	(kN)
70 x 45	900	900	0.5	0.8	900	0.7	1.1	900	1.0	1.5	900	1.3	2.0
70 x 45	900	1200	0.7	1.0	1200	1.0	1.4	1200	1.4	2.0	1200	1.8	2.6
70 x 45	900	1800	1.0	1.5	1800	1.4	2.1	1400	1.6	2.3	1400	2.0	3.1
70 x 45	1200	1200	0.9	1.4	1100	1.2	1.7	800	1.2	1.8	800	1.6	2.3
70 x 45	1200	1300	1.0	1.5	1100	1.2	1.7	800	1.2	1.8	800	1.6	2.3
90 x 45	1200	1700	1.3	1.9	1500	1.6	2.3	1000	1.5	2.2	1000	2.0	2.9

NOTE –
(1) M = Main roof; P = Periphery (see figures 10.16 and 10.17).
(2) Fixings with the capacity required by the table shall be selected from table 10.10.
(3) Purlin sizes are on the flat.

Table 10.9 – Purlins (see 10.2.1.16.1) **– VSG 10 and MSG 10**

(a) Light roof cladding (see figures 10.16 and 10.17)

Purlin size	Maximum span	Maximum spacing and fixing loads in the following wind zones											
		Low			Medium			High			Very high		
		Spacing	Fixing capacity		Spacing	Fixing capacity		Spacing	Fixing capacity		Spacing	Fixing capacity	
			M(1)	P(1)		M(1)	P(1)		M(1)	P(1)		M(1)	P(1)
(mm x mm)	(mm)	(mm)	(kN)	(kN)	(mm)	(kN)	(kN)	(mm)	(kN)	(kN)	(mm)	(kN)	(kN)
70 x 45	900	900	0.5	0.8	900	0.7	1.1	900	1.0	1.5	900	1.3	2.0
70 x 45	900	1200	0.7	1.0	1200	1.0	1.4	1200	1.4	2.0	1200	1.8	2.6
70 x 45	900	1800	1.0	1.5	1800	1.4	2.1	1800	2.0	2.9	1400	2.0	3.1
70 x 45	1200	1200	0.9	1.4	1200	1.3	1.9	1100	1.7	2.5	900	1.8	2.6
70 x 45	1200	1400	1.1	1.6	1400	1.5	2.2	1100	1.7	2.5	900	1.8	2.6
90 x 45	1200	1800	1.4	2.0	1800	1.9	2.8	1400	2.1	3.1	1100	2.1	3.2

NOTE –
(1) M = Main roof; P = Periphery (see figures 10.16 and 10.17).
(2) Fixings with the capacity required by the table shall be selected from table 10.10.
(3) Purlin sizes are on the flat.

Amd 2
May '06

Copyright Standards New Zealand

NOTES

© The Crown in right of New Zealand, administered by the New Zealand Standards Executive. Access to this standard has been sponsored by the Ministry of Business, Innovation, and Employment under copyright license LN001498. You are not permitted to reproduce or distribute any part of this standard without prior written permission from Standards New Zealand, on behalf of New Zealand Standards Executive, unless your actions are covered by Part 3 of the Copyright Act 1994.

Copyright Standards New Zealand

© The Crown in right of New Zealand, administered by the New Zealand Standards Executive. Access to this standard has been sponsored by the Ministry of Business, Innovation, and Employment under copyright license LN001498. You are not permitted to reproduce or distribute any part of this standard without prior written permission from Standards New Zealand, on behalf of New Zealand Standards Executive, unless your actions are covered by Part 3 of the Copyright Act 1994.

Table 10.10 – Capacity of fixings for purlins or battens (see 10.2.1.16.1 and 10.2.1.16.5)

Fixing description	Fixing capacity
	(kN)
1/100 x 3.75 nail or 1/90 x 3.15 power driven nail	0.4
2/100 x 3.75 skewed nails or 2/90 x 3.15 power driven nails	0.7
2/100 x 3.75 skewed nails + 1 wire dog or 2/100 x 3.75 skewed nails + 1/14 g Type 17 screw to AS 3566*	2.7
2/100 x 3.75 skewed nails + 2 wire dogs or 2/100 x 3.75 skewed nails + 2/14 g Type 17 screws to AS 3566*	4.7
* If screw fixed, screws shall be sufficiently long so as to penetrate rafter by at least 50 mm.	

Amd 1 Dec '00

NOTE –

(1) Purlins on flat may be substituted for the following sizes:

Amd 2 May '06

On flat	On edge
70 x 45	70 x 35
90 x 45	70 x 45

(2) Alternative fixings with required uplift capacity determined in accordance with 2.4.6 may be used. Amd 1 Dec '00

(3) Where purlins are fixed over sarking or ceiling sheet lining material refer to 10.2.1.16.5(b).

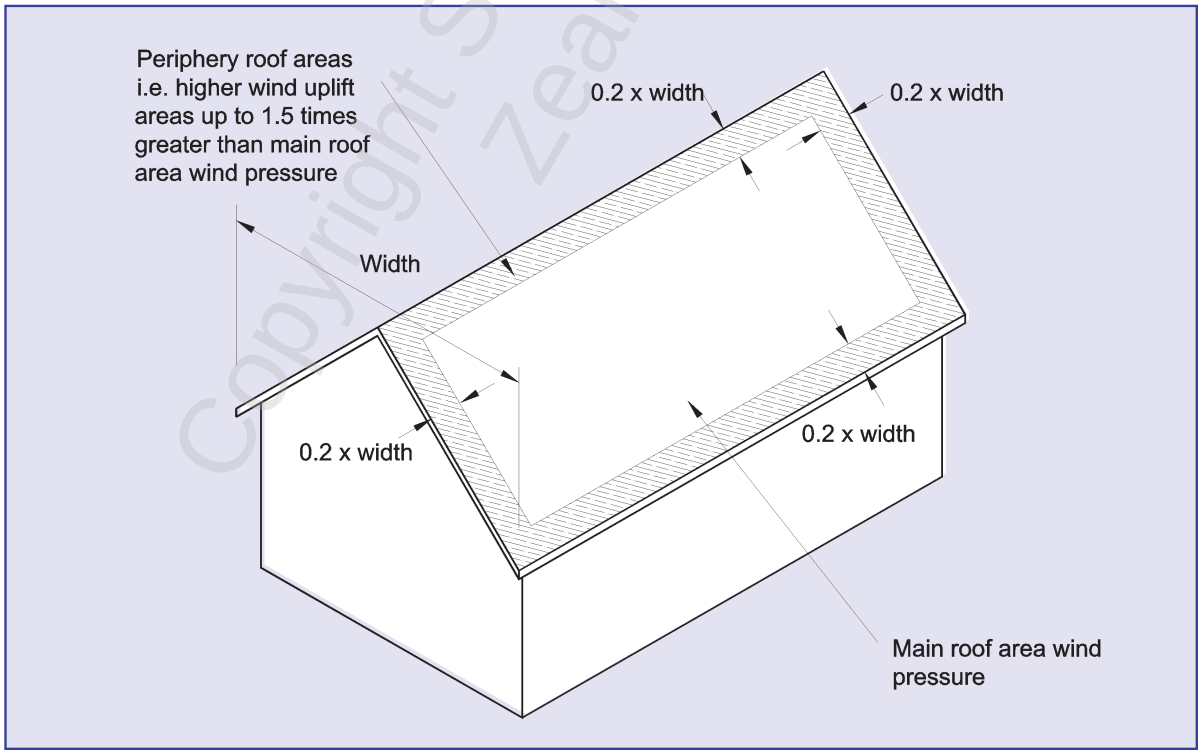

Figure 10.16 – Gable roof showing higher wind uplift areas requiring extra purlin and batten fixings (see table 10.9) Amd 1 Dec '00

Copyright Standards New Zealand

© The Crown in right of New Zealand, administered by the New Zealand Standards Executive. Access to this standard has been sponsored by the Ministry of Business, Innovation, and Employment under copyright license LN001498. You are not permitted to reproduce or distribute any part of this standard without prior written permission from Standards New Zealand, on behalf of New Zealand Standards Executive, unless your actions are covered by Part 3 of the Copyright Act 1994.

10.2.1.16 *Purlins and tile battens*

C10.2.1.16.1
Purlin spacings should not be greater than those recommended by the manufacturer of the roof cladding.

10.2.1.16.1
The size of *purlins* and tile battens shall be taken from table 10.9 using *spacing* to suit the spanning capability of the *cladding*. Fixings shall be selected from table 10.10 to have a capacity equal to or greater than that required by table 10.9. Amd 1 Dec '00

10.2.1.16.2
Purlins and tile battens shall be laid directly over *rafters* or dummy *rafters* and parallel to the associated ridge or eaves line as shown in figures 10.18 and 10.19.

C10.2.1.16.3
The strength of purlins is increased by being a continuous length over as many spans as is possible.

10.2.1.16.3
Purlins and tile battens shall be continuous over at least 2 spans, and may be butt jointed over supports provided that no 2 adjacent *purlins* or tile battens shall be jointed over the same truss or *rafter*.

10.2.1.16.4
Purlins may extend as cantilevers to form a *gable* verge as provided by 10.2.1.15.1.

10.2.1.16.5
Purlins and tile battens shall be fixed in accordance with the following:

(a) Laid directly over *rafters* and fixed to *rafters* in accordance with the fixing type set out in table 10.10;

(b) Where *purlins* and tile battens are laid directly over sheet *sarking* or ceiling sheet *lining material* of maximum 13 mm thickness, the *purlin* or tile batten shall be fixed as shown in figure 10.20(B). Amd 1 Dec '00

C10.2.1.16.6
The test represents the weight of a roof worker, and may be conducted between any two suitable supports at ground level.

10.2.1.16.6 *Tile Battens*
Tile battens shall be sawn No. 1 Framing, selected on site as follows: Battens shall be selected so as to be free from defects, or alternatively be able to resist a load of 100 kg gradually applied at midspan without failure. The test span must be the same as the spacing of the rafters where the batten is to be used. Amd 2 May '06

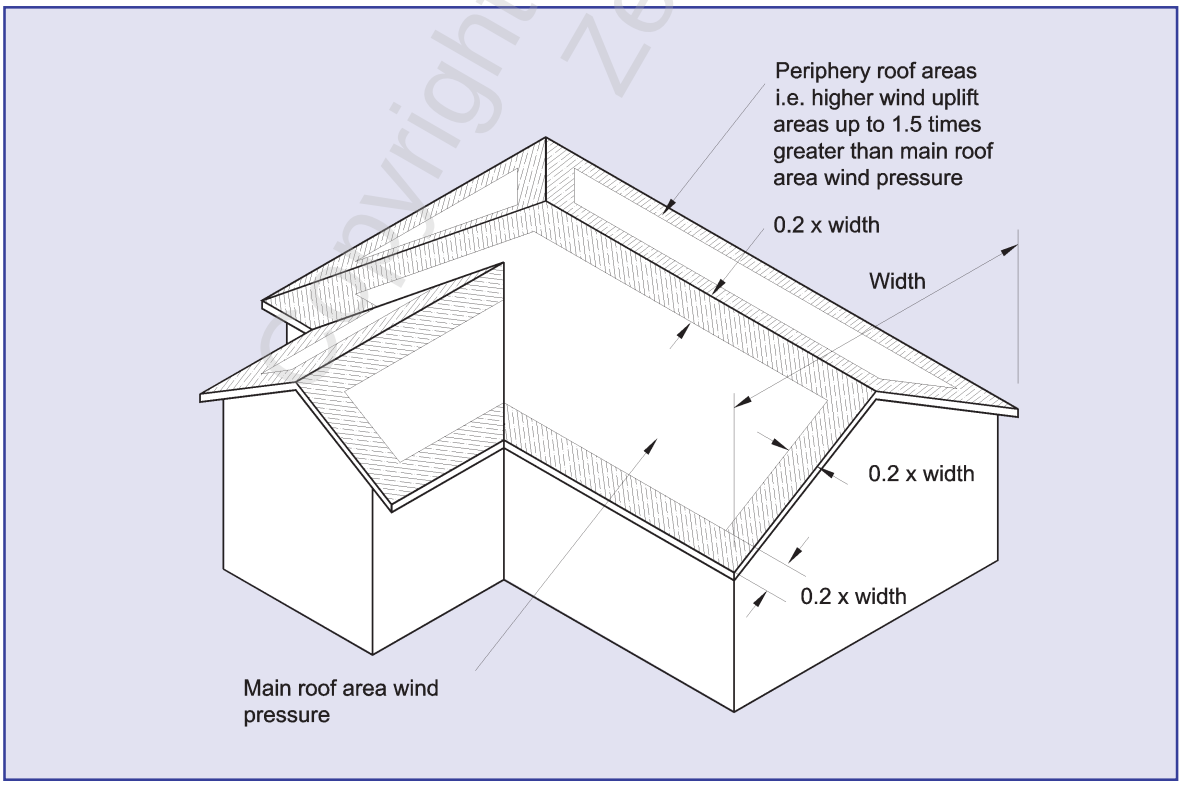

Figure 10.17 – Hip and valley roof showing higher wind uplift areas requiring extra purlin and batten fixings (see table 10.9) Amd 1 Dec '00

10.2.1.17 ***Dummy rafters***

10.2.1.17.1
Dummy *rafters* may be laid over sheet *sarking* or ceiling *lining* material which is no more than 13 mm thick as shown in figure 10.20.

10.2.1.17.2
Purlin to dummy *rafter* and dummy *rafter* to *rafter* fixings shall be as given by table 10.11 and figure 10.19.

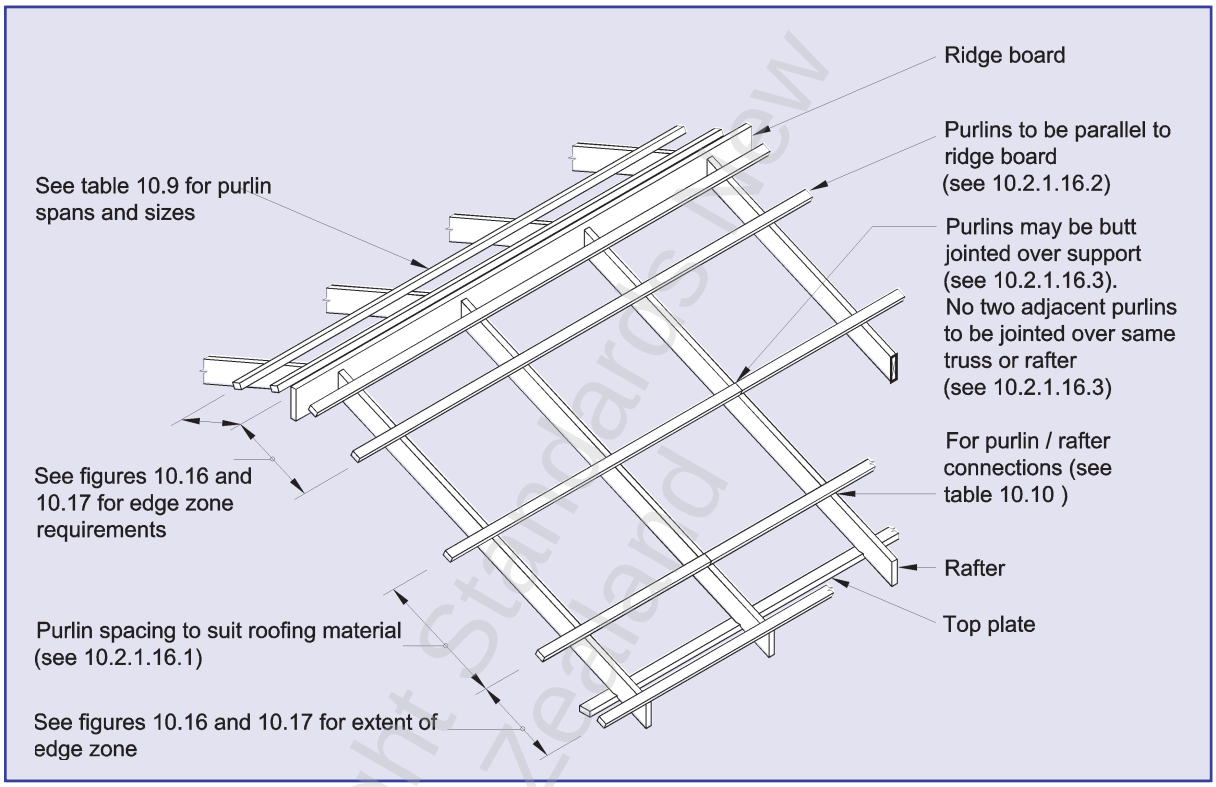

Figure 10.18 – Purlins fixed directly to rafters (see 10.2.1.16.2)

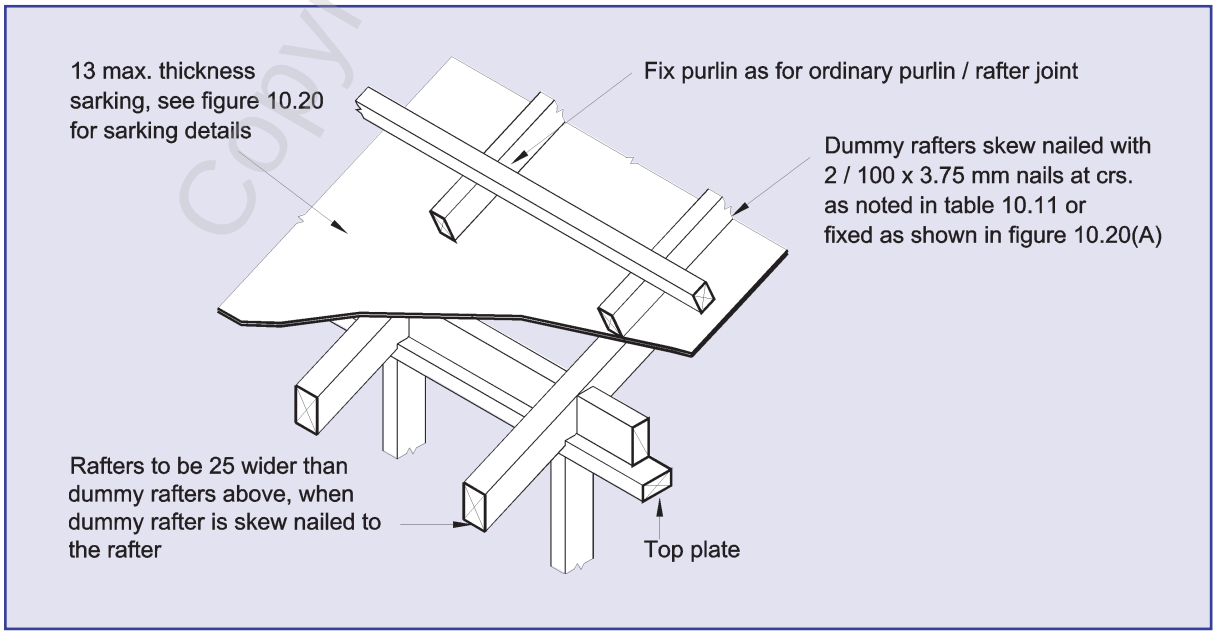

Figure 10.19 – Fixing purlins and dummy rafters to skillion roofs (see 10.2.1.16.2)

© The Crown in right of New Zealand, administered by the New Zealand Standards Executive. Access to this standard has been sponsored by the Ministry of Business, Innovation, and Employment under copyright license LN001498. You are not permitted to reproduce or distribute any part of this standard without prior written permission from Standards New Zealand, on behalf of New Zealand Standards Executive, unless your actions are covered by Part 3 of the Copyright Act 1994.

Copyright Standards New Zealand

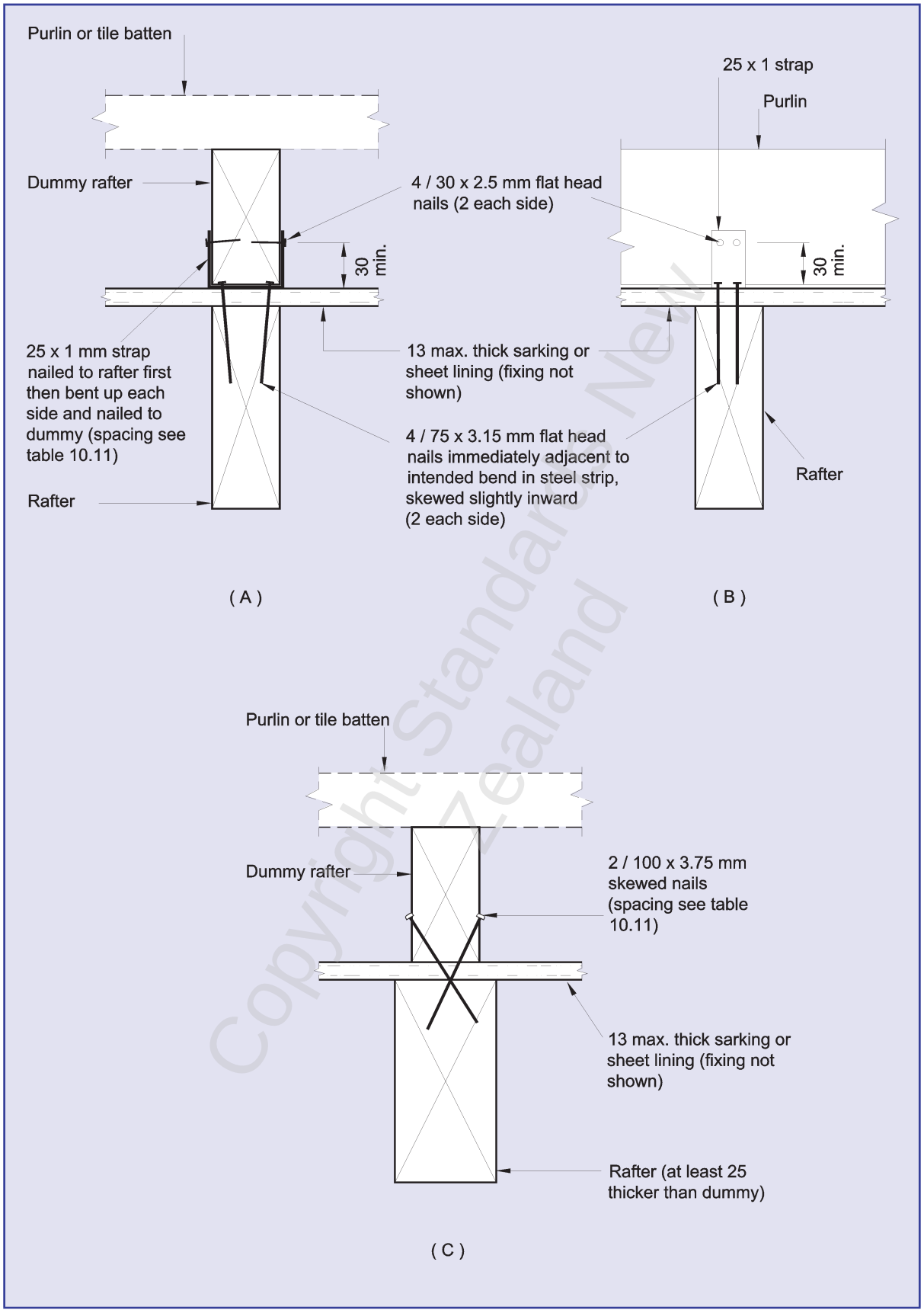

Figure 10.20 – Fixing purlins and dummy rafters to sarked roofs (see 10.2.1.17.1)

© The Crown in right of New Zealand, administered by the New Zealand Standards Executive. Access to this standard has been sponsored by the Ministry of Business, Innovation, and Employment under copyright license LN001498. You are not permitted to reproduce or distribute any part of this standard without prior written permission from Standards New Zealand, on behalf of New Zealand Standards Executive, unless your actions are covered by Part 3 of the Copyright Act 1994.

© The Crown in right of New Zealand, administered by the New Zealand Standards Executive. Access to this standard has been sponsored by the Ministry of Business, Innovation, and Employment under copyright license LN001498. You are not permitted to reproduce or distribute any part of this standard without prior written permission from Standards New Zealand, on behalf of New Zealand Standards Executive, unless your actions are covered by Part 3 of the Copyright Act 1994.

Table 10.11 – Spacing of fixings for dummy rafters for sarked roofs (see 10.2.1.17.2)

Rafter spacing (mm)	Fixing type	Fixing spacings for wind zone (mm)				Figure reference
	Wind zone	Low	Medium	High	Very high	
600	25 x 1 mm steel bracket 2/100 x 3.75 skewed nails	1600 750	1200 550	800 400	650 200	10.20(A) 10.20(C)
900	25 x 1 mm steel bracket 2/100 x 3.75 skewed nails	1000 500	800 300	600 200	300 150	10.20(A) 10.20(C)
1200	25 x 1 mm steel bracket	350	350	250	200	10.20(A)

NOTE – Use 2 power driven 90 x 3.3 or 90 x 3.15 nails for every one hand driven 100 x 3.75 nail.

10.2.2 Roof trusses

10.2.2.1 *Design and fabrication*

Roof trusses shall be specifically designed in accordance with NZS 3603 and their design and construction is outside the scope of this Standard.

10.2.2.2 *Maximum dimensions and spacings*

Roof trusses shall not exceed the following dimensions:

Amd 1 Dec '00

(a) The *support span* of a roof truss as given by figure 1.3 shall not exceed 12 m;

(b) The eaves overhang shall not exceed 750 mm measured horizontally from the face of the support; and

(c) Truss *spacings* shall not exceed 900 mm for *heavy* roofs or 1200 mm for *light roofs*.

10.2.2.3 *Drawings and specifications*

The application for a building consent shall include a roof *framing* plan that identifies the proposed locations of trusses and indicates the roof *bracing* requirements.

C10.2.2.2(c)

Support of girder trusses (i.e. trusses which carry loads from other trusses) is not provided for in this Standard).

C10.2.2.3

The Building Consent Authority should be provided with detailed drawings and specifications for all roof trusses. These should contain all information necessary to fabricate and erect the truss in accordance with its specific design and shall specifically include:

(a) The name of the person or organization responsible for the specific design of the truss;

(b) The truss design reference number or similar identification;

(c) The span of the truss expressed both as the horizontal distance between supports and as the roof member span as given by figure 1.3;

(d) The eaves overhang;

(e) The roof slope;

(f) The truss spacing;

(g) The dead load specifying both the type of roof cladding and the type of ceiling for which the truss is designed;

(h) The live load specifying the wind exposure and the snow load (if any) for which the truss is designed;

(j) The dimension of all truss members and components;

(k) The species and grade of the timber to be used for truss members;

Copyright Standards New Zealand

© The Crown in right of New Zealand, administered by the New Zealand Standards Executive. Access to this standard has been sponsored by the Ministry of Business, Innovation, and Employment under copyright license LN001498. You are not permitted to reproduce or distribute any part of this standard without prior written permission from Standards New Zealand, on behalf of New Zealand Standards Executive, unless your actions are covered by Part 3 of the Copyright Act 1994.

(m) The location and type of all fastenings (including adhesives) to be used for fabricating the truss;

(n) The recommended camber;

(o) The fixing requirements at supports, which shall not be less than the minimum fixing required by 10.2.2.6;

(p) The fixing requirements for wall framing members if different from those specified in this Standard;

(q) The lateral and vertical support requirements (if any) for truss members;

(r) Bracing requirements if different from those specified in this Standard.

C10.2.2.4

Any roof truss that has been damaged should be removed from the site, or advice on repairs sought from the person or firm responsible for the specific design of the truss. This applies both to accidental damage, including over-stressing of connections, and to deliberate actions such as cutting a truss member to facilitate erection. Roof trusses are to be erected in accordance with the drawings and specifications so as to be plumb and properly aligned at the required spacings.

10.2.2.4 ***Handling, transport, and erection***

Handling, transport, and erection procedures for roof trusses shall protect the trusses from damage.

C10.2.2.5

Although roof trusses are generally designed on the assumption that they receive no support from internal walls, long-term creep effects might impose loads on such walls through the connections between trusses and top plates. This loading on internal walls, and on truss and floor framing members, is considered to be acceptable and does not affect the "non-loadbearing" classification of the internal walls concerned. Wherever possible, unplanned support on the bottom chord should be avoided, as it can cause uneven ceilings and overstress the truss.

10.2.2.5 ***Truss connection to internal walls***

When trusses are connected to the *top plates* of non-loadbearing *internal walls* as required by 10.4.1.2, install all ceiling *framing* and roof *cladding* before connecting trusses. Do not connect or support bottom chord at points other than those designated by the truss manufacturer.

Copyright Standards New Zealand

Amd 1 Dec '00

10.2.2.6 ***Anchorage***

The fixing for a roof truss at its support shall be as given by the truss design but not less than that required in tables 10.12 and 10.13 and figure 10.21.

Amd 1 Dec '00

C10.2.2.6

Table 10.12 provides fixings for roof trusses at their supports for simple truss layouts only. It does not provide fixings for girder trusses, hip trusses or complex truss roof systems. The load paths and fixings for these are to form part of the overall truss systems design. Alternative fixings can be selected provided they meet the minimum capacity requirements of table 10.13.

Amd 1 Dec '00

Amd 1 Dec '00

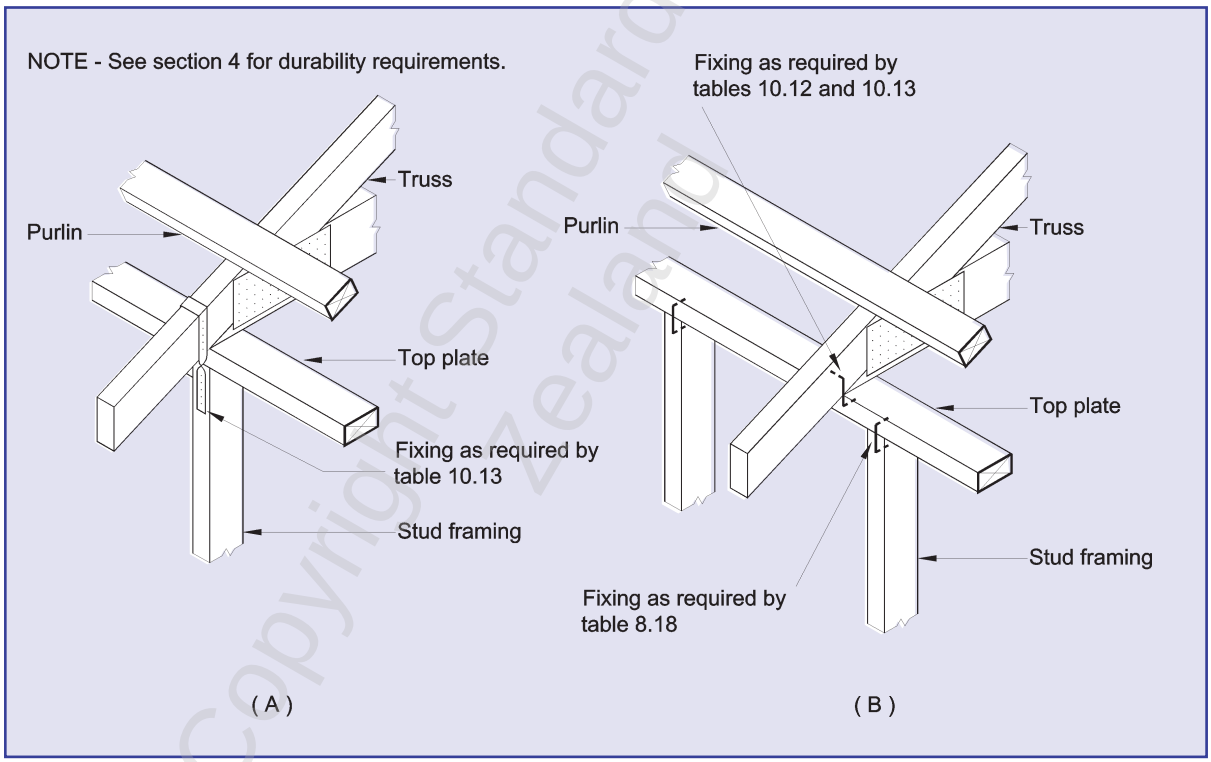

Amd 1 Dec '00

Figure 10.21 – Truss/top plate connections (see 10.2.2.6)

Amd 1 Dec '00

© The Crown in right of New Zealand, administered by the New Zealand Standards Executive. Access to this standard has been sponsored by the Ministry of Business, Innovation, and Employment under copyright license LN001498. You are not permitted to reproduce or distribute any part of this standard without prior written permission from Standards New Zealand, on behalf of New Zealand Standards Executive, unless your actions are covered by Part 3 of the Copyright Act 1994.

Copyright Standards New Zealand

Amd 1 Dec '00

Table 10.12 – Fixing types of roof trusses at supports (see 10.2.2.6)

Truss spacing (mm)	Fixing type											
	Light roofs								Heavy roofs			
	900				1200				900			
Wind zone	**L**	**M**	**H**	**VH**	**L**	**M**	**H**	**VH**	**L**	**M**	**H**	**VH**
Loaded dimension of support (m)												
3.0	C	C	C	D	C	B	C	D	A	A	C	C
3.5	C	C	C	D	C	C	D	E	A	A	C	C
4.0	C	C	C	D	C	C	D	E	A	C	C	C
4.5	C	C	D	E	C	C	D	F	A	C	C	D
5.0	C	C	D	E	C	C	E	F	A	C	C	D
5.5	C	C	D	E	C	C	E	F	A	C	C	D
6.0	C	C	D	F	C	D	E	F	A	C	C	D

Amd 1 Dec '00

Table 10.13 – Key to fixing types and capacity for rafters, roof trusses, underpurlins, ridge beams and strutting beams (see 10.2.2.6)

Fixing type	Fixing to resist uplift	Alternative fixing capacity
		(kN)
A	2/100 x 3.75 skewed nails	0.7
B	2/100 x 3.75 skewed nails + 1 wire dog	2.7
C	2/100 x 3.75 skewed nails + 2 wire dogs	4.7
D	2/100 x 3.75 skewed nails + 3 wire dogs	6.7
E	2/100 x 3.75 skewed nails + 4 wire dogs	8.7
F	2/100 x 3.75 skewed nails + U strap of 27 mm x 1.2 mm 10/30 x 3.15 nails at each end	16.0

Copyright Standards New Zealand

© The Crown in right of New Zealand, administered by the New Zealand Standards Executive. Access to this standard has been sponsored by the Ministry of Business, Innovation, and Employment under copyright license LN0098. You are not permitted to reproduce or distribute any part of this standard without prior written permission from Standards New Zealand, on behalf of New Zealand Standards Executive, unless your actions are covered by Part 3 of the Copyright Act 1994.

© The Crown in right of New Zealand, administered by the New Zealand Standards Executive. Access to this standard has been sponsored by the Ministry of Business, Innovation, and Employment under copyright license LN001498. You are not permitted to reproduce or distribute any part of this standard without prior written permission from Standards New Zealand, on behalf of New Zealand Standards Executive, unless your actions are covered by Part 3 of the Copyright Act 1994.

10.3 Systems to resist horizontal loads

10.3.1 *General*

Roof *bracing* systems for both truss and framed roofs shall be provided in accordance with table 10.1. Mono-pitch roofs supporting heavy *cladding* shall be considered to be a *gable* roof and shall have their highest support considered to be the ridge line. Small roof planes of less than 6 m^2, such as for dormers and porches, do not require *bracing*.

C10.3
Table 10.1 summarizes the requirements of this clause.

10.3.2 *Light hip roofs*

Each ridge line and its associated trusses or *rafters,* in a light hip roof, shall be *braced* by not less than 3 hip or *valley rafters* running clear from the ridge line to the *top plate* of a *loadbearing wall*, or shall be *braced* as required by 10.3.4 for a *light gable roof*.

10.3.3 *Heavy hip roofs*

10.3.3.1

Each ridge line and its associated trusses or *rafters* in a *heavy* hip *roof* shall be *braced* as shown in figure 10.22 by:

(a) Not less than 3 hip or valley trusses or *rafters* running clear through from the ridge line to the *top plate* of a *loadbearing wall*; and

(b) One roof plane *diagonal brace* complying with 10.4.2 in each side plane of the roof for each 35 m^2 or part thereof of plan area of that plane.

10.3.3.2

For L-shaped roofs with ridge lines at right angles to each other, the valley or hip formed between 2 roof planes may be counted as forming a roof plane diagonal *brace* for each roof plane.

Any hip or valley not counted may be used as a roof plane *diagonal brace* (see figure 10.22).

10.3.3.3

A *top plate* supporting hip-end jack trusses or *jack rafters* shall be connected at not more than 2.5 m centres to *wall bracing elements* parallel to the ridge line. Such connections shall be either:

(a) As required by 8.7.4; or

(b) By *braces* in the plane of the ceiling. Each such ceiling *brace* shall be a continuous length of 90 mm x 45 mm timber fixed to the upper side of each truss bottom chord or ceiling *joist* that it intersects, to the *top plate* of the supporting wall, and to the *bracing element* (see figures 10.22 and 10.23). When the lower chord of any truss exceeds the depth of the bottom chord of adjoining trusses, the *brace* can be spliced by a 53 x 1 mm steel strap 1 m long with 30 x 3.15 nails to each end of the strap.

No such connections shall be required when the *top plate* is a boundary member of a ceiling *diaphragm* complying with 13.5.

C10.3.3.3
(b) Blocking may be necessary at the intersection with the top plate.

Copyright Standards New Zealand

© The Crown in right of New Zealand, administered by the New Zealand Standards Executive. Access to this standard has been sponsored by the Ministry of Business, Innovation, and Employment under copyright license LN001498. You are not permitted to reproduce or distribute any part of this standard without prior written permission from Standards New Zealand, on behalf of New Zealand Standards Executive, unless your actions are covered by Part 3 of the Copyright Act 1994.

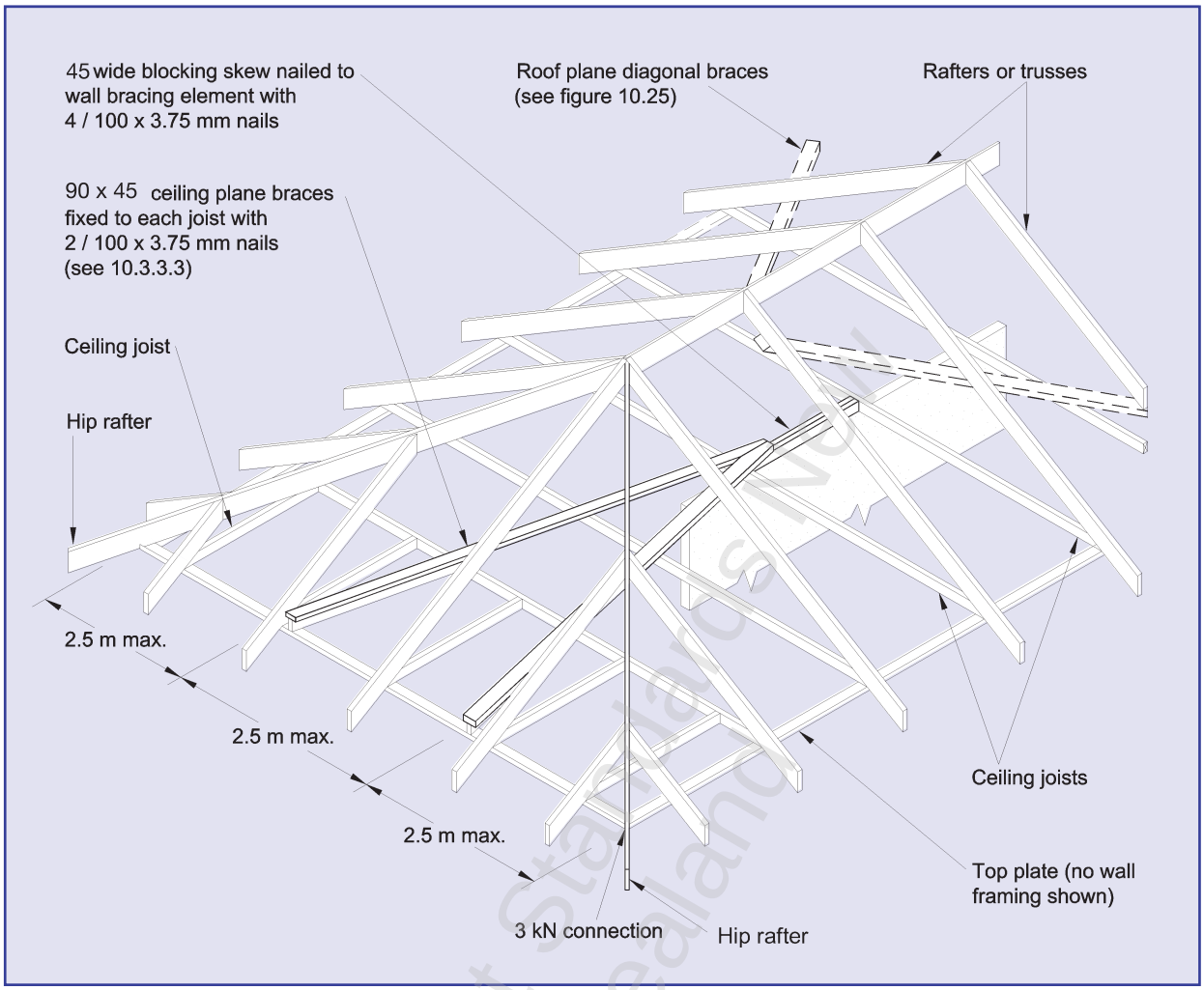

Figure 10.22 – Bracing of heavy hip roofs (see 10.3.3.1)

Copyright Standards New Zealand

10.3.3.4

Any fixing used as an alternative to a fixing shown in figures 10.22 or 10.23 shall have a *capacity* as follows:

(a) Jack truss or *jack rafter* to *top plate*: 2 kN in tension or compression along the line of the top chord or the *rafter*;

(b) Hip or valley truss or *rafter* to *top plate*: 3 kN in tension or compression along the line of the top chord or the *rafter*;

(c) Ceiling *brace* to *top plate*: 3.5 kN in tension or compression along the line of the ceiling *brace*.

10.3.4 *Light gable roofs*

Each ridge line and its associated trusses or *rafters* in a light *gable* roof shall be *braced* by either:

(a) One roof plane *diagonal brace* complying with 10.4.2 in each plane of the roof for each 50 m^2, or part thereof of plan area of that plane; or

(b) Roof space *diagonal braces* complying with 10.4.3 at not more than 7.5 m centres along the ridge line, provided that there shall be one such *brace* at each end of the ridge line.

© The Crown in right of New Zealand, administered by the New Zealand Standards Executive. Access to this standard has been sponsored by the Ministry of Business, Innovation, and Employment under copyright license LN001498. You are not permitted to reproduce or distribute any part of this standard without prior written permission from Standards New Zealand, on behalf of New Zealand Standards Executive, unless your actions are covered by Part 3 of the Copyright Act 1994.

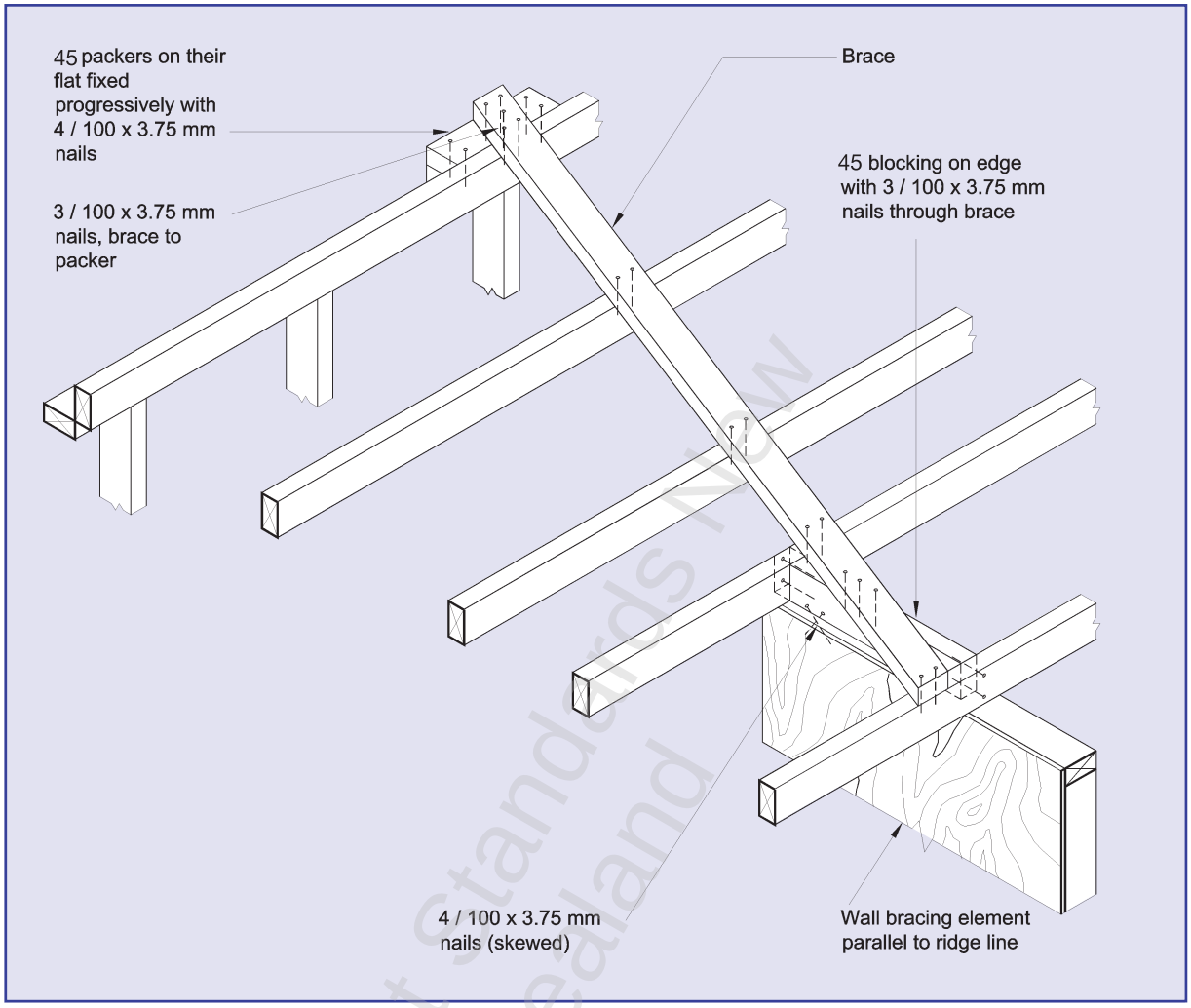

Figure 10.23 – Ceiling braces connecting hip-end top plates to wall bracing elements
(see 10.3.3.4)

Copyright Standards New Zealand

10.3.5 *Heavy gable roofs*

Each ridge line and its associated trusses or *rafters* in a *heavy gable roof* shall be *braced* as shown in figure 10.24 by:

(a) One roof plane *diagonal brace* complying with 10.4.2 in each plane of the roof for each 25 m^2 or part thereof of plan area of that plane; and

(b) One roof space *diagonal brace* complying with 10.4.3 for each 12 m^2 or part thereof of the plan area of each roof plane; such *braces* shall:

(i) Be not less than 2 m from a parallel *external wall*, provided that at least half of all such *braces* shall be not more than 2 m from the ridge line;

(ii) Be evenly distributed along the length of the roof.

C10.3.4 and C10.3.5

For the purpose of 10.3.3.1 and 10.3.4 the area of a verge overhang but not an eaves overhang, is required to be included in the roof plane plan area.

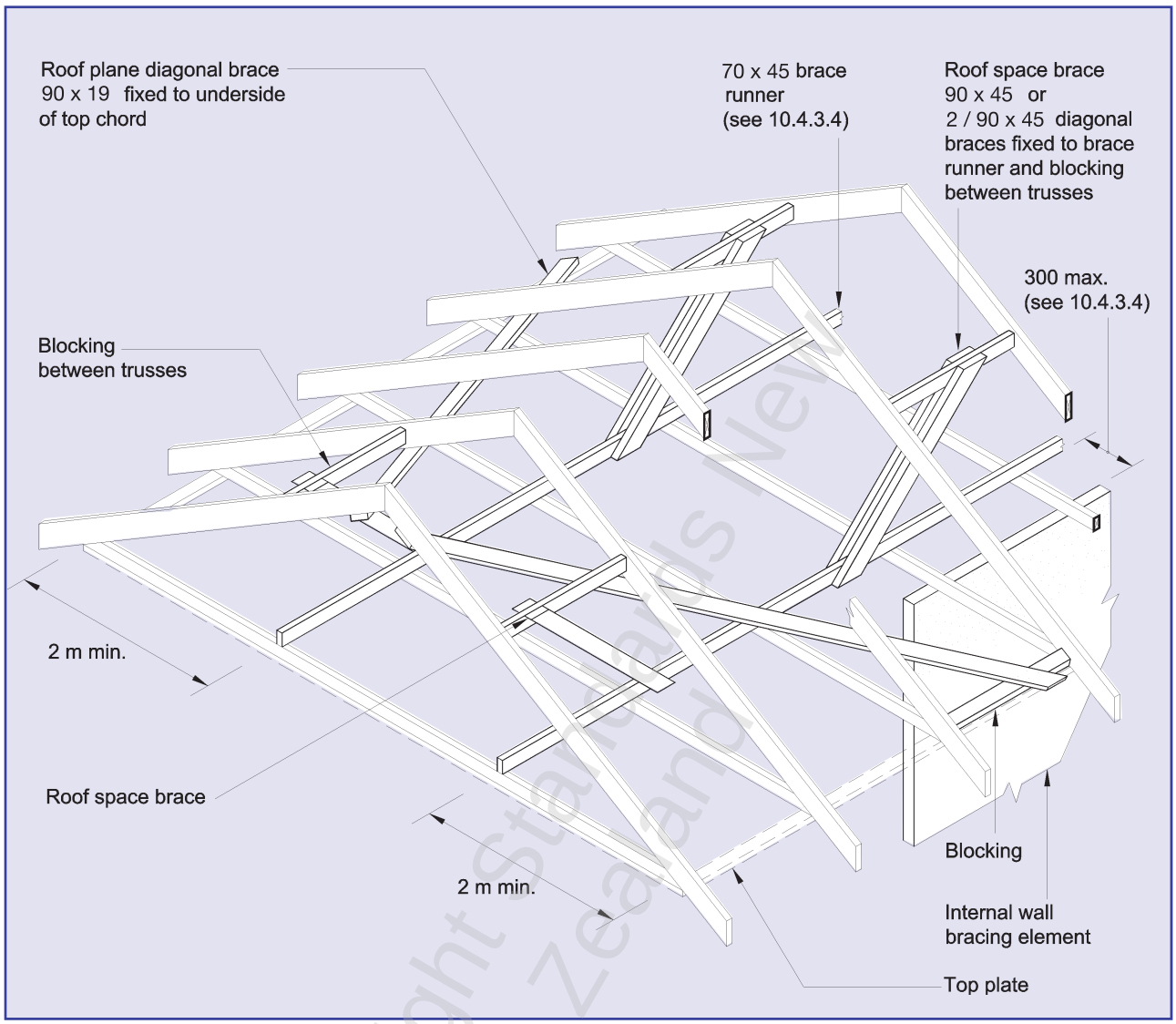

Figure 10.24 – Bracing of heavy gable roofs (see 10.3.5)

10.4 Roof bracing details

10.4.1 *General*

10.4.1.1
Roof *bracing* shall be provided as required by 10.3, provided that roof plane *diagonal braces* may be omitted where there is:

(a) Sheet *sarking* complying with 10.4.4; or

(b) A structural ceiling *diaphragm* complying with 13.5 and attached to the *rafters*.

10.4.1.2
The bottom chord of a truss that crosses an *internal wall* containing one or more *wall bracing elements* shall be connected to the *top plate* of the wall either directly or by a *ceiling batten* running parallel to the *plate* and fixed to both the *plate* and the bottom chord.

© The Crown in right of New Zealand, administered by the New Zealand Standards Executive. Access to this standard has been sponsored by the Ministry of Business, Innovation, and Employment under copyright license LN001498. You are not permitted to reproduce or distribute any part of this standard without prior written permission from Standards New Zealand, on behalf of New Zealand Standards Executive, unless your actions are covered by Part 3 of the Copyright Act 1994.

Copyright Standards New Zealand

© The Crown in right of New Zealand, administered by the New Zealand Standards Executive. Access to this standard has been sponsored by the Ministry of Business, Innovation, and Employment under copyright license LN001498. You are not permitted to reproduce or distribute any part of this standard without prior written permission from Standards New Zealand, on behalf of New Zealand Standards Executive, unless your actions are covered by Part 3 of the Copyright Act 1994.

10.4.2 *Roof plane diagonal braces*

10.4.2.1
Where only one roof plane *diagonal brace* is required, then it shall intersect one end of the ridge line.

10.4.2.2
Where more than one roof plane *diagonal brace* is required, then one shall intersect each end of the ridge line and any others shall, as far as possible, be evenly distributed along the ridge and run alternately in opposing directions.

10.4.2.3
Each roof plane *diagonal brace* shall (see figure 10.25):

(a) Run at 45° to the ridge line and from the ridge to the supporting wall;

(b) Consist of either:

Amd 2 May '06

(i) A continuous length of 90 mm x 19 mm timber; or

(ii) A diagonally opposing pair of continuous steel strips each having a *capacity* of 8.0 kN in tension, fixed to each top chord or *rafter* that is intersected, and to the *top plate*.

C10.4.2.3
(b) Blocking between trusses or joists may be necessary at the intersection with the top plate (see figure 10.25).

10.4.3 *Roof space diagonal braces* (see figure 10.26)

10.4.3.1
Roof space *diagonal braces* shall as far as possible be evenly distributed over the length of the roof and run alternately in opposite directions.

10.4.3.2
Each roof space *diagonal brace* shall:

(a) Run not steeper than 45° to the horizontal from top chord level to bottom chord level or from *ridge board* or *rafter* level to ceiling *joist* level as appropriate;

(b) In plan view be parallel to or at not more than 25° to the ridge line;

(c) Consist of 90 mm x 45 mm continuous members as required below. Where 2 members are required they shall be *spaced* 45 mm apart and nailed together through the *spacing* pieces at centres not exceeding 1 m.

C10.4.3.2
(c) Where a roof space brace can be fixed to a roof framing member within its length, then the effective length shall be measured between such a fixing and end of the brace.

Roof space diagonal braces			
	Timber grade		
	No.1 Framing MSG 6	VSG 8 MSG 8	VSG 10 MSG 10
Member size (mm)	**Maximum length** (m)		
90 x 45	1.65	1.85	2.00
2/90 x 45 spaced	4.30	4.80	5.00

Amd 2 May '06

10.4.3.3
The top end of each roof space *diagonal brace* shall be fixed to the *ridge board* or to a 90 mm x 45 mm *blocking* piece fixed between adjacent top chords or *rafters*.

Amd 2 May '06

Copyright Standards New Zealand

© The Crown in right of New Zealand, administered by the New Zealand Standards Executive. Access to this standard has been sponsored by the Ministry of Business, Innovation, and Employment under copyright license LN001498. You are not permitted to reproduce or distribute any part of this standard without prior written permission from Standards New Zealand, on behalf of New Zealand Standards Executive, unless your actions are covered by Part 3 of the Copyright Act 1994.

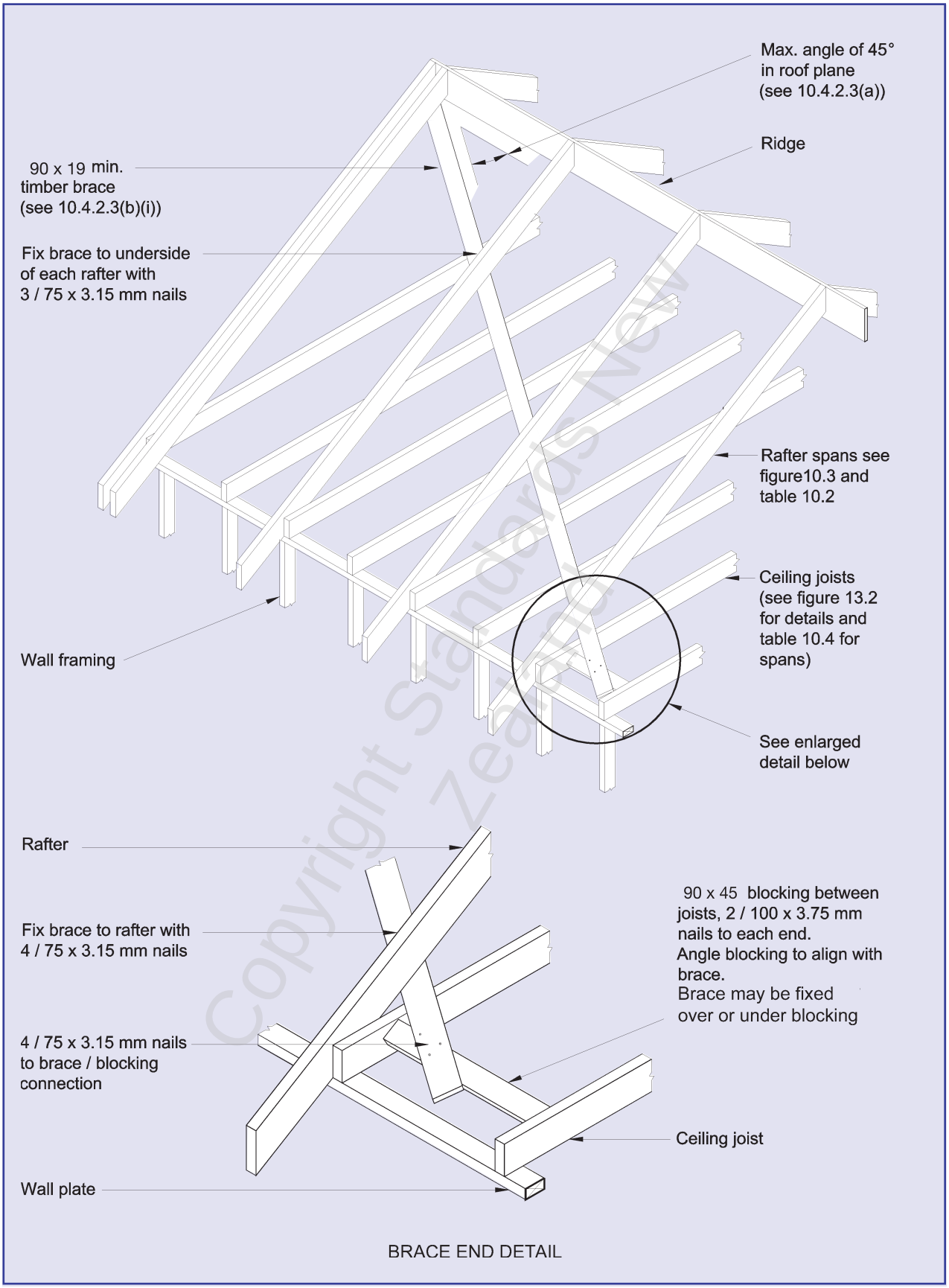

Amd 2 May '06

Figure 10.25 – Roof plane diagonal brace – Timber (see 10.4.2.3)

© The Crown in right of New Zealand, administered by the New Zealand Standards Executive. Access to this standard has been sponsored by the Ministry of Business, Innovation, and Employment under copyright license LN001498. You are not permitted to reproduce or distribute any part of this standard without prior written permission from Standards New Zealand, on behalf of New Zealand Standards Executive, unless your actions are covered by Part 3 of the Copyright Act 1994.

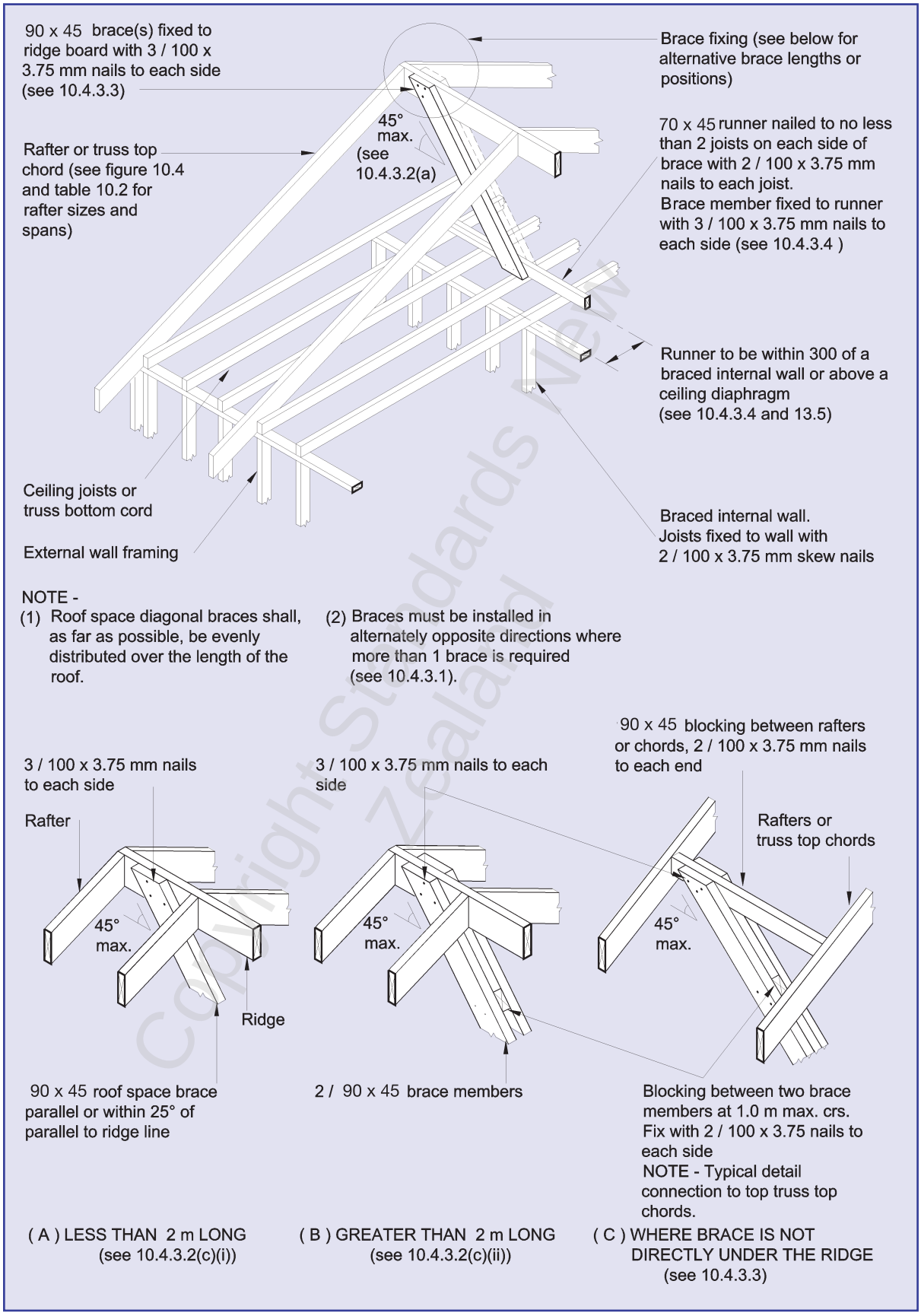

Figure 10.26 – Roof space diagonal brace – Alternative fixings (see 10.4.3)

© The Crown in right of New Zealand, administered by the New Zealand Standards Executive. Access to this standard has been sponsored by the Ministry of Business, Innovation, and Employment under copyright license LN001498. You are not permitted to reproduce or distribute any part of this standard without prior written permission from Standards New Zealand, on behalf of New Zealand Standards Executive, unless your actions are covered by Part 3 of the Copyright Act 1994.

10.4.3.4
The bottom end of each roof space *diagonal brace* shall be fixed to a 70 mm x 45 mm *brace runner* which shall:

(a) Either be laid over a ceiling *diaphragm* complying with 13.5 or run parallel to and within 300 mm measured centre-to-centre of a wall containing a *wall bracing element*;

(b) Be fixed to not less than 2 bottom chords or ceiling *joists* on each side of the *diagonal brace*.

10.4.4 *Sheet sarking*

Sheet *sarking* shall:

(a) Be either:

(i) Plywood not less than 6 mm thick three-ply; or

(ii) Any other wood-based product not less than 4.5 mm thick having a density not less than 880 kg/m^3; or

(iii) Any other wood-based product not less than 6 mm thick having a density not less than 600 kg/m^3.

(b) Cover the entire roof surface (see figure 10.27);

(c) Be fixed directly to *rafters* or truss top chords;

(d) Have fixings not less than 10 mm from sheet edges.

Copyright Standards New Zealand

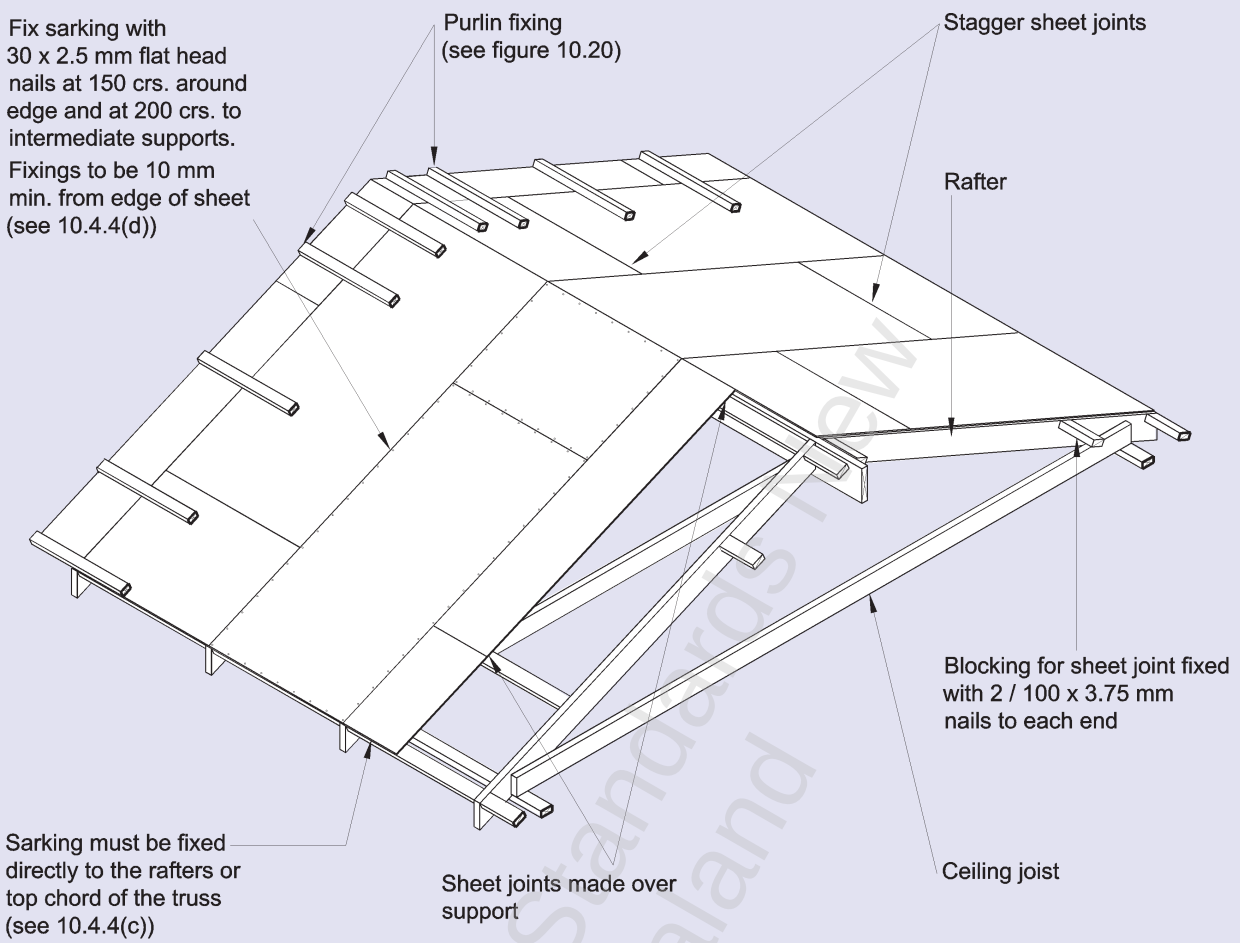

NOTE -
(1) Sheet sarking shall comprise (see 10.4.4(a)):
(a) 3 ply plywood not less than 6 mm thick; or
(b) 4.5 mm min. wood-based product with a density not less than 880 kg/m^3; or
(c) 6 mm min. wood-based product with a density not less than 600 kg/m^3.
(2) Sheet sarking may substitute for roof plane braces.

Figure 10.27 – Sheet sarked roof (see 10.4.4(b))

10.5 Nailing schedule for roofs

10.5.1

Table 10.14 lists the size, number and location of nails to be used in roof *framing*. See 2.4 and 4.4.6 for other requirements for nails.

10.5.2

Rafter to *ridge beam* connections shall be as detailed in figure 10.5.

© The Crown in right of New Zealand, administered by the New Zealand Standards Executive. Access to this standard has been sponsored by the Ministry of Business, Innovation, and Employment under copyright license LN001498. You are not permitted to reproduce or distribute any part of this standard without prior written permission from Standards New Zealand, on behalf of New Zealand Standards Executive, unless your actions are covered by Part 3 of the Copyright Act 1994.

Copyright Standards New Zealand

© The Crown in right of New Zealand, administered by the New Zealand Standards Executive. Access to this standard has been sponsored by the Ministry of Business, Innovation, and Employment under copyright license LN001498. You are not permitted to reproduce or distribute any part of this standard without prior written permission from Standards New Zealand, on behalf of New Zealand Standards Executive, unless your actions are covered by Part 3 of the Copyright Act 1994.

Table 10.14 – Nailing schedule for hand driven and power driven nails (see 10.5.1)

Joint	Hand driven nails		Power driven nails	
	Length (mm) x diameter (mm) and type	Number and location	Length (mm) x diameter (mm) and type	Number and location
Roof framing				
Rafter or jack rafter to ridge board or top plate (except skillion roofs) (see 10.2.1.3.7)	See table 10.2	See table 10.2	See table 10.2	See table 10.2
Truss to top plate of external wall	See tables 10.12 and 10.13	See tables 10.12 and 10.13	See tables 10.12 and 10.13	See tables 10.12 and 10.13
Truss to top plate of internal wall	100 x 3.75	2	90 x 3.15	2 4
Ceiling batten to parallel top plate of internal wall bracing element	75 x 3.15	2 at 400 mm centres	90 x 3.15	2 at 400 mm centres
Collar tie or cleat to rafter	75 x 3.15	4	75 x 3.06	4
Flitches to ridge board and roof members for each side on both joints	60 x 2.8	3	60 x 2.8	3
Hip rafter to top plate	See table 10.2	See table 10.2	See table 10.2	See table 10.2
Underpurlin strut to underpurlin or top plate or strutting beam	100 x 3.75 together with fixing types as set out in table 10.6	2	90 x 3.15 together with fixing types as set out in table 10.6	3
Strutting beam to top plate	100 x 3.75 together with fixing types as set out in table 10.7	2 (skewed)	90 x 3.15 together with fixing types as set out in table 10.7	2 (skewed)
Roof braces at each connection to a framing member:				
(a) 90 mm x 19 mm brace	75 x 3.15	3	75 x 3.15	3
(b) 70 mm x 45 mm brace runner	100 x 3.75	2	90 x 3.15	3
(c) 90 mm x 45 mm brace	100 x 3.75	3	90 x 3.15	5
(d) Steel strip brace (i) At ends (ii) Other cases (iii) To ends of braces	 60 x 3.15 60 x 3.15	 3 2		

NOTE –
(1) Nail lengths and diameters are the minimum required.
(2) Refer to 4.4 for required protective coatings for metal fasteners.
(3) Proprietary fixings with the required fixing capacity indicated in the tables may be used.

© The Crown in right of New Zealand, administered by the New Zealand Standards Executive. Access to this standard has been sponsored by the Ministry of Business, Innovation, and Employment under copyright license LN001498. You are not permitted to reproduce or distribute any part of this standard without prior written permission from Standards New Zealand, on behalf of New Zealand Standards Executive, unless your actions are covered by Part 3 of the Copyright Act 1994.

Table 10.14 – Nailing schedule for hand driven and power driven nails (continued) (see 10.5.1)

Joint	Hand driven nails		Power driven nails	
	Length (mm) x diameter (mm) and type	Number and location	Length (mm) x diameter (mm) and type	Number and location
Roof framing (continued)				
Blocking between rafters, joists or truss chords, 90 mm x 45 mm	100 x 3.75	2 (end nailed)	90 x 3.15	2 (end nailed)
Outrigger to gable top plate (as for equivalent purlins)	See table 10.9	See table 10.9	See table 10.9	See table 10.9
Outrigger to rafter	100 x 3.75 or 75 x 3.15	2 (end nailed) 4 (skewed)	90 x 3.15	3 (end nailed)
Flying rafter to outrigger	100 x 3.75	2	90 x 3.15	3
Outrigger blocking to top plate	100 x 3.75	4 (skewed)	90 x 3.15	4 (skewed)
Purlin or batten directly to rafter or top chord	See table 10.9	See table 10.9	See table 10.9	See table 10.9
Roof sarking				
Board sarking to rafters or top chords: (a) Boards not exceeding 75 mm wide (b) Boards exceeding 75 mm wide	$2^1/_2$ x finished thickness	 1 2		
Sheet material for sheet sarking to: (a) Rafters or top chords at sheet edges (b) Intermediate supports	30 x 2.5 FH	 150 mm centres 300 mm centres		
Purlins or battens through sarking to rafter or top chord	See table 10.11	See table 10.11	See table 10.11	See table 10.11

NOTE –
(1) Nail lengths and diameters are the minimum required.
(2) Refer to 4.4 for required protective coatings for metal fasteners.
(3) Proprietary fixings with the required fixing capacity indicated in the tables may be used.

Amd 1 Dec '00

Copyright Standards New Zealand

NOTES

Copyright Standards New Zealand

© The Crown in right of New Zealand, administered by the New Zealand Standards Executive. Access to this standard has been sponsored by the Ministry of Business, Innovation, and Employment under copyright license LN001498. You are not permitted to reproduce or distribute any part of this standard without prior written permission from Standards New Zealand, on behalf of New Zealand Standards Executive, unless your actions are covered by Part 3 of the Copyright Act 1994.

© The Crown in right of New Zealand, administered by the New Zealand Standards Executive. Access to this standard has been sponsored by the Ministry of Business, Innovation, and Employment under copyright license LN001498. You are not permitted to reproduce or distribute any part of this standard without prior written permission from Standards New Zealand, on behalf of New Zealand Standards Executive, unless your actions are covered by Part 3 of the Copyright Act 1994.

SECTION 11

THE BUILDING ENVELOPE – ROOF AND WALL CLADDINGS

11.1 General **11**-3
11.2 Roof cladding underlays **11**-3
11.3 Roof claddings **11**-3
11.4 Wall cladding underlays or sheathings **11**-3
11.5 Wall claddings **11**-7
11.6 Exterior joinery **11**-9
11.7 Masonry veneer wall cladding **11**-10
11.8 Solid plaster exterior wall cladding (stucco) **11**-19
11.9 Windows **11**-22

Table

11.1 Underlays and sheathings **11**-4
11.2 Roof claddings **11**-5
11.3 Wall claddings **11**-8
11.4 Veneer lintels **11**-16
11.5 Tolerances for masonry veneer **11**-16
11.6 Plywood sheet thickness **11**-21

Figure

11.1 Heights of veneer construction **11**-11
11.2 Veneer cavity closures **11**-14
11.3 Flashing details – Veneer **11**-17
11.4 Backing details **11**-20

Copyright Standards New Zealand

© The Crown in right of New Zealand, administered by the New Zealand Standards Executive. Access to this standard has been sponsored by the Ministry of Business, Innovation, and Employment under copyright license LN001498. You are not permitted to reproduce or distribute any part of this standard without prior written permission from Standards New Zealand, on behalf of New Zealand Standards Executive, unless your actions are covered by Part 3 of the Copyright Act 1994.

Copyright Standards New Zealand

© The Crown in right of New Zealand, administered by the New Zealand Standards Executive. Access to this standard has been sponsored by the Ministry of Business, Innovation, and Employment under copyright license LN001498. You are not permitted to reproduce or distribute any part of this standard without prior written permission from Standards New Zealand, on behalf of New Zealand Standards Executive, unless your actions are covered by Part 3 of the Copyright Act 1994.

11 THE BUILDING ENVELOPE – ROOF AND WALL CLADDINGS

11.1 General

11.1.1

The *cladding* shall consist of the following:

(a) Roof and wall *cladding* with or without underlay or *sheathing*;

(b) Exterior joinery units consisting of windows, doors and skylights.

11.1.2 *Durability*

All fixings shall comply with the relevant requirements of section 4.

C11.1.1

Wall claddings may form part of wall bracing elements. The type of cladding will influence the bracing demand for earthquake loading.

Timber shingles and shakes, unpainted stucco and unpainted fibre cement products are not covered by this Standard.

These materials and some other absorbent cladding materials are affected by solar driven moisture which accumulates in the wall and roof cavity causing decay. They require individual design and testing. BRANZ Reprint 122 deals with this subject.

11.2 Roof cladding underlays

11.2.1

A roof *cladding* underlay shall be provided under all metal and fibre cement roof *claddings* and under concrete roof tiles, as specified by NZS 4206 (see table 11.2).

11.2.2

Roof *cladding* underlay where used (see table 11.2) shall consist of sheets laid either horizontally or vertically with minimum laps of 100 mm, provided that:

(a) They shall only be run vertically on pitches of 8° or more;

(b) When laid horizontally, the upper sheets shall be lapped over the lower sheets on the roof;

(c) There shall be minimum laps of 150 mm when fire retardant underlay is used; and

(d) There shall be minimum laps of 150 mm for underlays under concrete or clay tiles. Where a lap occurs under a tile *batten*, the overlap can be reduced to 75 mm.

11.2.3

Roof *cladding* underlays shall satisfy the requirements of table 11.1.

11.3 Roof claddings

Materials for roof *claddings* shall comply with table 11.2.

C11.3

Table 11.2, under the heading of 'Informative provisions', also gives some information and guidance on requirements for cladding fixings, flashings and finishing although these details are not complete. Exact details of what is proposed must be submitted to and approved by the Building Consent Authority.

11.4 Wall cladding underlays or sheathings

11.4.1

A rigid or non-rigid wall *cladding* underlay or *sheathing* shall be provided behind all wall *claddings*. Underlays or *sheathing* under timber weatherboards in the situations described in 11.5.2.6 and under stucco on non-rigid backing described in 11.8.8 are also required to be wind barriers. Table 11.1 identifies materials suitable as wind barriers.

Copyright Standards New Zealand

© The Crown in right of New Zealand, administered by the New Zealand Standards Executive. Access to this standard has been sponsored by the Ministry of Business, Innovation, and Employment under copyright license LN001498. You are not permitted to reproduce or distribute any part of this standard without prior written permission from Standards New Zealand, on behalf of New Zealand Standards Executive, unless your actions are covered by Part 3 of the Copyright Act 1994.

Table 11.1 Underlays and sheathings (see 11.2.2, 11.4.1, 11.4.2, 11.4.3 and 11.4.4)

Material	Relevant Standard	Surface absorption capacity (g/m^2)	Vapour trans-mission resistance (MNs/g*)	Airflow resistance (MNs/m^3)	Additional properties
Roofing underlays					
Amd 1 Dec '00 Lightweight and heavyweight building paper and roofing felts	NZS 2295	Greater than 100	Equal to or less than 7		For anti-ponding requirements see note
Non-rigid wall cladding underlay or sheathing					
Amd 1 Dec '00 Lightweight building paper	NZS 2295	Greater than 100	Equal to or less than 7		
Amd 1 Dec '00 Heavyweight building paper	NZS 2295	Greater than 100	Equal to or less than 7		This can be used as a wind barrier when it has a bursting strength of not less than 500 kN/m^2 when wet and tested in accordance with BS 3137
Rigid wall cladding underlay or sheathing					
Amd 1 Dec '00 Plywood	NZS 2269 to the require-ments of NZS 3602 and treated to NZS 3640	Greater than 100	Equal to or less than 5	Equal to or more than 1	This is a wind barrier; it shall be treated to H3 of NZS 3640
Amd 1 Dec '00 Fibre cement sheet	NZS/AS 2908:Part 2			Equal to or more than 1	This is a wind barrier; it shall be sealed with 2 coats acrylic paint including edges (edges may be sealed with bead of sealant in the gap between sheets)
* Vapour transmission shall be measured using ASTM E96 procedure B or BW.					

NOTE – Install anti-ponding boards at the bottom edge of tiled roofs with less than 15° pitch. These boards are to be placed below the underlay adjacent to the fascia so that water is not trapped by sagging underlay.

Copyright Standards New Zealand

© The Crown in right of New Zealand, administered by the New Zealand Standards Executive. Access to this standard has been sponsored by the Ministry of Business, Innovation, and Employment under copyright license LN001498. You are not permitted to reproduce or distribute any part of this standard without prior written permission from Standards New Zealand, on behalf of New Zealand Standards Executive, unless your actions are covered by Part 3 of the Copyright Act 1994.

Table 11.2 – Roof claddings (see 11.3)

Normative (mandatory) provisions				Informative provisions (also refer manufacturer's technical information)		
Type of cladding	**Relevant Standard**	**Special requirements**	**Underlay**	**Fixing**	**Joint closure**	**Finishing / outer membrane**
Profiled galvanized steel	NZS 3403	Seal end laps* with neutral cured silicone sealant at top of bottom sheet	Roofing underlay	To purlins	Flashings	Pre-finished paint, or paint on site, or unpainted
Profiled zinc/ aluminium alloy coated steel (Amd 1 Dec '00)	AS 1397		Roofing underlay	To purlins	Flashings	Pre-finished paint, or paint on site, or unpainted
Corrugated cellulose cement	NZS/AS 2908: Part 1		Roofing underlay	To purlins	Flashings	Paint – 2 coats acrylic
Concrete interlocking tiles	NZS 4206		As specified in NZS 4206. Roofing underlay if: – pitch is 17° or less – roof is of skillion construction	To purlins, as specified in NZS 4206	Self and flashings	Self
Pressed metal tiles	NZS 4217: Parts 1 & 2		As specified in NZS 4217 for roofing underlay	As specified in NZS 4217: Part 2	Self	Self
Copper	BS EN 1172		Roofing underlay	Fix to sarking with copper nails and clips	Self	Self
Lead	BS 6915		Roofing underlay	Fix to sarking with copper nails and clips	Self	Self
Mastic asphalt	BS 6925		–	To sarking	Self	Self or stone aggregate
Clay tiles	AS 2049		As specified in AS 2050	Fix to battens with nails or screws to AS 2050	Self	Self

Amd 1 Dec '00 * This is to prevent condensation from lying in the joints and is the minimum required to achieve 15 year durability requirement. Priming side laps may extend the durability but is not required to comply with clause B2 of the NZBC.

Copyright Standards New Zealand

© The Crown in right of New Zealand, administered by the New Zealand Standards Executive. Access to this standard has been sponsored by the Ministry of Business, Innovation, and Employment under copyright license LN001498. You are not permitted to reproduce or distribute any part of this standard without prior written permission from Standards New Zealand, on behalf of New Zealand Standards Executive, unless your actions are covered by Part 3 of the Copyright Act 1994.

Table 11.2 – Roof claddings (see 11.3) (continued)

Normative (mandatory) provisions				Informative provisions (also refer manufacturer's technical information)		
Type of cladding	**Relevant standard**	**Special requirements**	**Underlay**	**Fixing**	**Joint closure**	**Finishing/ outer membrane**
Aluminium	BSCP 143: Part 15		Roofing underlay	Varies with profile: – corrugated sheet nailed or screwed to sarking – trough sections, use proprietary clips to sarking	Flashings	Paint or unfinished
Zinc	BSCP 143: Part 5		Roofing underlay	To sarking	Flashings	Paint or unfinished
Asphalt shingles	NZS 4408			To sarking	Flashings	Self

Copyright Standards New Zealand

11.4.2
Non-rigid underlay or *sheathing* shall consist of a building paper as specified in table 11.1 and shall be fixed as follows:

(a) Run horizontally;

(b) Lapped no less than 75 mm at joints, with the direction of lap ensuring water is shed to the outer face of the paper;

(c) Adequately secured to *plates*, *bearers*, and *studs*; and

(d) Extended from the upperside of the *top plate* to the underside of the *bearers* or *wall plates* supporting the ground floor *joists*;

(e) For wind barriers, heavy weight breather type building paper complying with NZS 2295 for water absorbency and resistance to water penetration, and having a bursting strength of no less than 500 kN/m^2 when tested to BS 3137;

(f) Repaired or replaced if punctured or torn, immediately before exterior coverings are fixed.

11.4.3
Materials for non-rigid wall *cladding* underlays or *sheathing* shall comply with the provisions of table 11.1.

11.4.4
Materials for rigid wall *cladding* underlays or *sheathing* shall comply with the provisions of table 11.1.

© The Crown in right of New Zealand, administered by the New Zealand Standards Executive. Access to this standard has been sponsored by the Ministry of Business, Innovation, and Employment under copyright license LN001498. You are not permitted to reproduce or distribute any part of this standard without prior written permission from Standards New Zealand, on behalf of New Zealand Standards Executive, unless your actions are covered by Part 3 of the Copyright Act 1994.

11.5 Wall claddings

11.5.1

Wall *claddings* shall comply with the appropriate provisions of the following clauses:

11.5.2 Weatherboards
11.6 Exterior joinery
11.7 Masonry veneer
11.8 Solid plaster (stucco)

For other *cladding* types see table 11.3.

11.5.2 *Timber weatherboards*

11.5.2.1
The profiles for horizontal bevel back, horizontal rusticated and vertical shiplap timber weatherboards, shall comply with the relevant requirements of NZS 3617. For vertical board-and-batten the boards shall be 19 mm thick and a maximum 200 mm wide, and the battens 70 mm x 19 mm. Boards and battens shall have 6 mm square weather grooves formed in them, so that the grooves in each coincide when fixed.

11.5.2.2
Horizontal bevel back and rusticated weatherboards shall be fixed to *framing* at maximum 600 mm centres with a single nail located immediately above, but within 10 mm of the lap. Nails shall be 75 mm x 3.15 mm for bevel back and 60 mm x 2.8 mm for rusticated boards. Joints shall be drilled for nailing and mitred, or butted and fitted with corrosion resistant soakers, and end grain shall be sealed against moisture penetration by painting in accordance with NZS 7703.

11.5.2.3
Horizontal laps shall be 32 mm for non-rebated bevel back boards. Rebated bevel back and rusticated boards shall have a 25 mm minimum horizontal lap and be fitted with a 2 mm gap between the boards.

11.5.2.4
Vertical board-and-batten weatherboards shall be in continuous lengths and be fitted with a 5 mm to 8 mm gap between boards. Boards and battens shall be fixed to *framing* at maximum 480 mm centres with a single nail in the middle of the board and batten. Nails shall be 60 mm x 2.8 mm for boards and 75 mm x 3.15 mm for battens.

11.5.2.5
Vertical shiplap weatherboards shall be fitted with a 2 mm gap between boards, and be fixed to *framing* at maximum 480 mm centres, with a single 60 mm x 2.8 mm nail, within 10 mm of the side of the lap.

C11.5.1
Table 11.3, under the heading of 'Informative provisions', also gives some information and guidance on requirements for cladding fixings, flashings and finishing although these details are not complete. Exact details of what is proposed must be submitted to, and approved by the Building Consent Authority.

C11.5.2
For all types of weatherboards in high and very high wind zones, particular attention must be paid to the fitting of wind barriers and flashings. Further guidance on the installation of timber weatherboards can be found in the BRANZ publication "Good Timber Cladding Practice".

Copyright Standards New Zealand

© The Crown in right of New Zealand, administered by the New Zealand Standards Executive. Access to this standard has been sponsored by the Ministry of Business, Innovation, and Employment under copyright license LN001498. You are not permitted to reproduce or distribute any part of this standard without prior written permission from Standards New Zealand, on behalf of New Zealand Standards Executive, unless your actions are covered by Part 3 of the Copyright Act 1994.

Table 11.3 – Wall claddings (see 11.5.1)

Normative (mandatory) provisions			Informative provisions (also refer manufacturer's technical information)		
Type of cladding	**Relevant Standard**	**Special requirements**	**Fixing**	**Joint closure**	**Finishing/ outer membrane**
Plywoods	AS/NZS 2269 NZS 3611	End use requirements of NZS 3602 : treated to NZS 3640	Jointed over framing members	Flashings (horizontal) Battens (vertical) Shiplap (vertical)	Paint
Timber fibre boards	AS/NZS 1859	–	Over framing members: butt joints Over other members : shiplapped/ tongue & grooved	Flashings/ plastic jointers	Paint
Profiled zinc coated steel sheet	NZS 3403	–	Nails, screws	Flashings	Primed & 2 coats paint
Profiled zinc/ aluminium coated steel	NZS/AS 1397	–	Nails, clips, screws	Flashing: reactivity table	Pre-painted Site painted Unfinished
Profiled or flat fibre cement	NZS/AS 2908: Part 1	–	Nails, screws	Flashings	Primed & 2 coats acrylic

Amd 1 Dec '00

NOTE –

(1) This table also gives some information and guidance on requirements for wall claddings, although these details are not complete. Exact details of what is proposed must be submitted to and approved by the *Building Consent Authority*.

(2) Refer to: 11.5.2 for weatherboards
11.6 for exterior joinery
11.7 for masonry veneer
11.8 for solid plaster (stucco).

Copyright Standards New Zealand

© The Crown in right of New Zealand, administered by the New Zealand Standards Executive. Access to this standard has been sponsored by the Ministry of Business, Innovation, and Employment under copyright license LN001498. You are not permitted to reproduce or distribute any part of this standard without prior written permission from Standards New Zealand, on behalf of New Zealand Standards Executive, unless your actions are covered by Part 3 of the Copyright Act 1994.

11.5.2.6
Wind barriers are not required behind all types of weatherboards in low wind zones, nor behind bevel back weatherboards in medium and high wind zones. In these cases an underlay as given by 11.4 is adequate.

In medium wind zones, a rigid or non-rigid wind barrier shall be installed behind shiplap, board-and-batten and rusticated weatherboards unless they are protected by a 3 coat paint system, comprising a primer on all surfaces of the boards, and 2 finishing coats on all exposed surfaces.

In high wind zones, a rigid wind barrier shall be installed behind shiplap weatherboards, and a rigid or non-rigid wind barrier shall be installed behind rusticated and board-and-batten weatherboards.

In very high wind zones a wind barrier shall be installed behind all weatherboards, and it shall be a rigid type behind shiplap, board-and-batten and rusticated weatherboards.

For underlay or *sheathing* that is also a wind barrier see the 'Additional properties' in table 11.1.

11.6 Exterior joinery

11.6.1 *Windows and doors*

11.6.1.1
Joints between windows and doors, and the *cladding,* shall be made weatherproof by one or a combination of the following systems. Full details of what is proposed with respect to the systems must be submitted to, and approved by the *Building Consent Authority:*

(a) Head, jamb and sill flashings;

(b) Scribers;

(c) Proprietary seals;

(d) Sealants that are:

(i) Not directly exposed to sunlight or weather;

(ii) Easy to access and replace.

11.6.1.2
Windows shall comply with the strength, deflection and water leakage requirements of sections 10 and 12 of NZS 4211.

11.6.2 *Skylights, roof lights and roof hatches*

Joints between skylights, roof lights and roof hatches, and roof *cladding,* shall be made weatherproof by one or a combination of the following systems. Full details of what is proposed with respect to the systems must be submitted to, and approved by the *Building Consent Authority*:

(a) Full perimeter flashings;

(b) Proprietary seals;

Copyright Standards New Zealand

© The Crown in right of New Zealand, administered by the New Zealand Standards Executive. Access to this standard has been sponsored by the Ministry of Business, Innovation, and Employment under copyright license LN001498. You are not permitted to reproduce or distribute any part of this standard without prior written permission from Standards New Zealand, on behalf of New Zealand Standards Executive, unless your actions are covered by Part 3 of the Copyright Act 1994.

(c) Sealants forming part of a system incorporating (a) or (b) and that are:

(i) Not directly exposed to sunlight or weather; or

(ii) Easy to access and replace.

11.7 Masonry veneer wall cladding

C11.7.1
All other veneer applications are required to be demonstrated by specific design that the veneer complies with the NZBC. Such design could be based on NZS 3603, NZS 4203, NZS 4210, NZS 4229 and NZS 4230 as appropriate.

11.7.1 *Scope*

Masonry veneer wall *cladding* (see figure 11.1) shall have:

(a) A maximum height of veneer above adjacent *finished ground level* of 7 m;

(b) A maximum mass of veneer of 220 kg/m^2;

(c) A maximum height of veneer of 4.0 m, measured from the top of the concrete masonry wall, *foundation wall* or slab edge *foundation*. In the case of a veneer faced concrete block wall or *foundation wall* be measured from the top of that wall (see figure 11.1);

(d) A maximum height of veneer of 5.5 m on a *gable* end;

(e) The *bracing demand* for *framing* supporting masonry veneer determined from values listed in tables 5.8 to 5.10;

(f) Where the veneer exceeds 3 m in height (excluding a *gable*) over more than 20 % of an *exterior wall* length, the minimum *bracing demand* of 10 *bracing units* given by 5.4.2.3, shall be increased to 12.

11.7.2 *General*

11.7.2.1
The materials and workmanship of masonry veneer shall be in accordance with NZS 4210. Mortar less than 24 hours old shall not be subject to vibration, such as would result from the nailing of interior *linings*.

11.7.2.2
No length of a veneer wall or return shall be less than 230 mm, measured from the external face of the veneer.

11.7.3 *Foundation*

11.7.3.1
Masonry veneer shall be supported by one, or a combination of the following.

(a) *Foundation wall*;

(b) Thickened slab edge *footing*.

The support shall be constructed to comply with figures 6.14, 7.14, 7.15 and 11.1.

Copyright Standards New Zealand

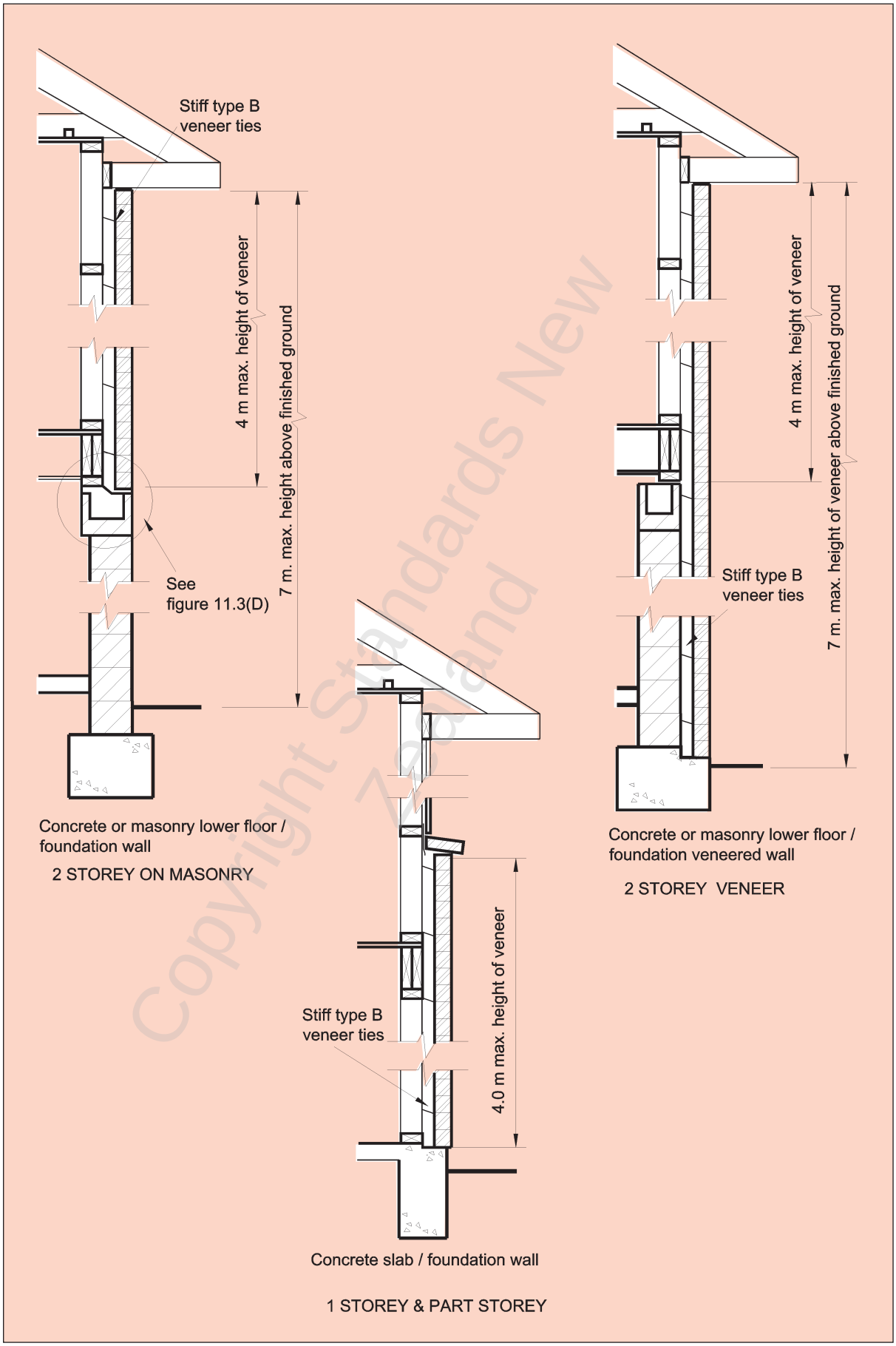

Figure 11.1 – Heights of veneer construction (see 11.7.1)

© The Crown in right of New Zealand, administered by the New Zealand Standards Executive. Access to this standard has been sponsored by the Ministry of Business, Innovation, and Employment under copyright license LN001498. You are not permitted to reproduce or distribute any part of this standard without prior written permission from Standards New Zealand, on behalf of New Zealand Standards Executive, unless your actions are covered by Part 3 of the Copyright Act 1994.

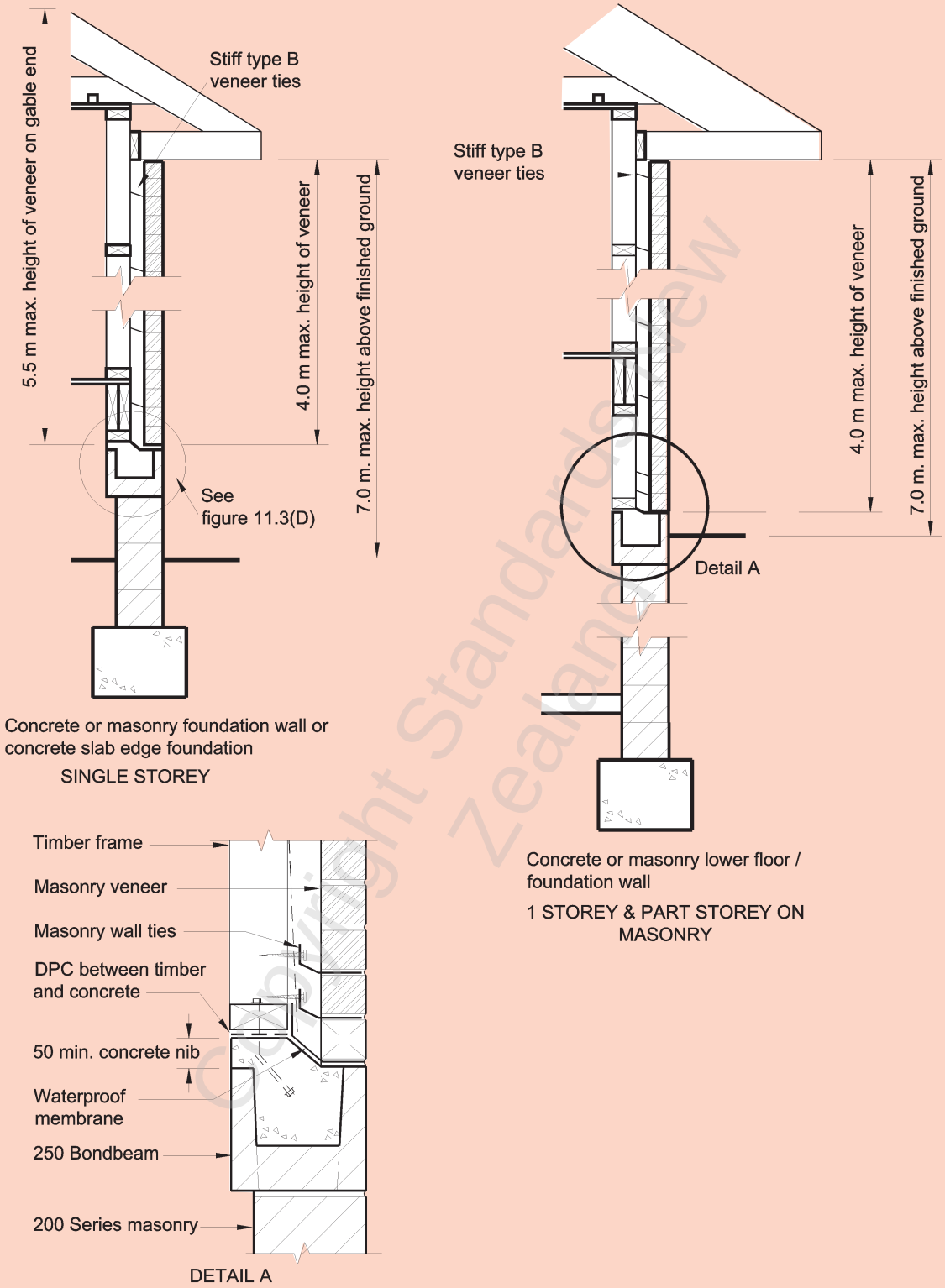

NOTE – Two ties in adjoining courses are needed immediately above DPC.

Figure 11.1 – Heights of veneer construction (continued) (see 11.7.1)

© The Crown in right of New Zealand, administered by the New Zealand Standards Executive. Access to this standard has been sponsored by the Ministry of Business, Innovation, and Employment under copyright license LN001498. You are not permitted to reproduce or distribute any part of this standard without prior written permission from Standards New Zealand, on behalf of New Zealand Standards Executive, unless your actions are covered by Part 3 of the Copyright Act 1994.

Amd 1 Dec '00

© The Crown in right of New Zealand, administered by the New Zealand Standards Executive. Access to this standard has been sponsored by the Ministry of Business, Innovation, and Employment under copyright license LN001498. You are not permitted to reproduce or distribute any part of this standard without prior written permission from Standards New Zealand, on behalf of New Zealand Standards Executive, unless your actions are covered by Part 3 of the Copyright Act 1994.

11.7.3.2
The top of a *foundation wall* or concrete slab shall be stepped down, so that the surface supporting the veneer is 50 mm or more below the surface supporting the timber *framing*. The level of the concrete slab above ground shall comply with 7.5.2.

11.7.3.3
The veneer shall not overhang its supporting *foundation* by more than 20 mm.

11.7.4 *Cavities*

11.7.4.1
The cavity between the masonry veneer and the exterior face of the timber *framing* shall not be less than 40 mm or more than 75 mm wide.

C11.7.4.1
It is important to maintain the minimum cavity width of 40 mm. The tolerances for erection of timber frames should be considered, because the cumulative tolerances from table 2.1 could reduce the cavity width to 20 mm, which is unacceptable. Variations in cavity width will require consideration of the length of tie used.

11.7.4.2
Pipes and services shall not be placed in the cavity other than passing directly through the cavity to the exterior.

11.7.4.3
The cavity shall be drained from the bottom by providing weep holes, a minimum of 75 mm in height, by the width of the vertical mortar joint, at centres not exceeding 800 mm.

Amd 1 Dec '00

Where the first course is less than 75 mm in height, the *spacing* of weep holes shall be decreased to give a ventilation area of 1000 mm^2/m wall length.

11.7.4.4
The cavity shall be ventilated to the outside by the provision of weep holes at the bottom, as defined in 11.7.4.3, and either similar vents as defined in 11.7.4.3 at the top; or a continuous 10 mm gap between the top course and soffit board. The cavity shall be sealed off from the floor and roof space (see figures 11.2(A) and (B)).

11.7.4.5
Vermin proofing shall be fitted to the cavity where gaps greater than 13 mm exist.

11.7.4.6
Stepped joints on top of concrete or concrete masonry walls supporting veneers, which are adjacent to habitable spaces, shall be provided with moisture proof flashings over the full surface of the stepped joint, to prevent water from the veneer and cavity entering the building as illustrated in figure 11.3(D). Joints shall be sealed against moisture penetration. Flashings at openings shall be provided as required in 11.7.7.

11.7.5 *Wall ties*

11.7.5.1
Masonry veneer shall be attached to a structural backing (wall *framing* members or *foundation walls*) by wall ties.

11.7.5.2
Wall ties and their fixings, *spacings* and embedment shall be in accordance with the requirements of NZS 4210.

C11.7.5.2
The spacing depends on the mass of the veneer, the earthquake zoning and type of tie. The ties are to be screw-fixed (i.e. non-impact method) using screw fixings supplied by the proprietary tie manufacturer. Reference to NZS 4210 is required.

Copyright Standards New Zealand

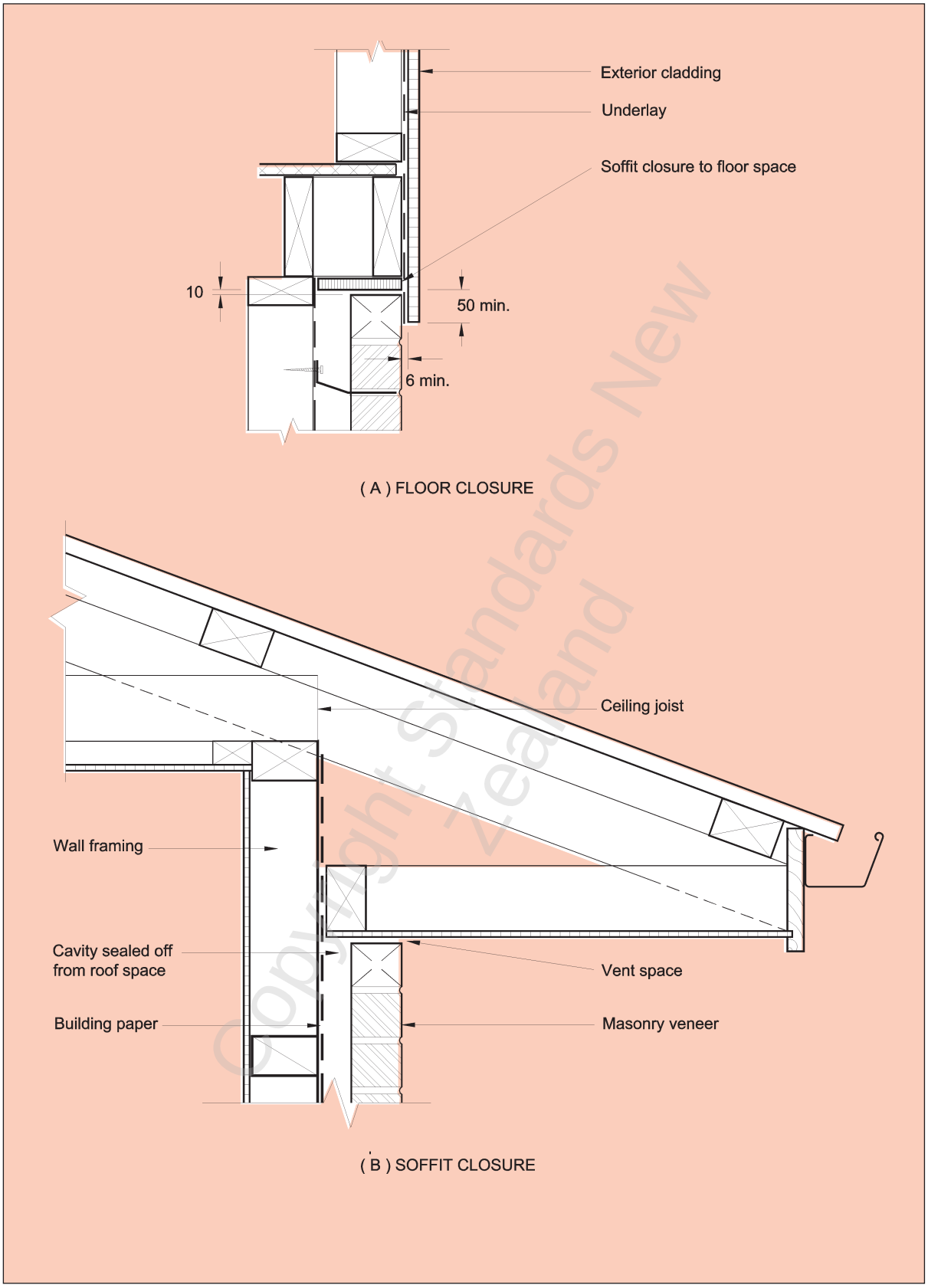

Figure 11.2 – Veneer cavity closures (see 11.7.4.4)

© The Crown in right of New Zealand, administered by the New Zealand Standards Executive. Access to this standard has been sponsored by the Ministry of Business, Innovation, and Employment under copyright license LN001498. You are not permitted to reproduce or distribute any part of this standard without prior written permission from Standards New Zealand, on behalf of New Zealand Standards Executive, unless your actions are covered by Part 3 of the Copyright Act 1994.

© The Crown in right of New Zealand, administered by the New Zealand Standards Executive. Access to this standard has been sponsored by the Ministry of Business, Innovation, and Employment under copyright license LN001498. You are not permitted to reproduce or distribute any part of this standard without prior written permission from Standards New Zealand, on behalf of New Zealand Standards Executive, unless your actions are covered by Part 3 of the Copyright Act 1994.

11.7.5.3
Wall ties shall be installed so that they are contained within the mortar bed, with a layer of mortar both above and below the tie. Wall ties shall be of such a length that they have an embedment length of at least half the width of the veneer, and an end cover of 15 mm for galvanized steel ties. Wall ties shall be fixed to *framing* members with screws or other non-impact fasteners. Where rigid underlay has been used, the length of the fixing screw shall be increased by the thickness of the underlay.

C11.7.5.3
The practice of dry placing onto the top of the veneer and placing the mortar bed across the top of the tie is not acceptable. The mortar bed must be prelaid and the tie placed on the wet mortar followed by flushing of mortar over the top surface of the tie. End covers for ties other than galvanized steel are available in NZS 4210. All fixings must be made through the sheeting to the primary frame, not just the sheeting material.

11.7.6 *Openings*

11.7.6.1
Openings with masonry veneer above shall be spanned by mild steel angle or flat *lintels,* protected against corrosion in accordance with the provisions of 4.5.

11.7.6.2
Lintels shall have a minimum seating of:

(a) 100 mm for spans up to, and including 2 m;

(b) 200 mm for spans over 2 m.

Sizes of veneer *lintels* are given in table 11.4.

11.7.7 *Flashings*

Flashings shall be protected against corrosion (see section 4) and shall be provided:

(a) Across the top of openings;

(b) At window sills;

(c) Where different exterior *cladding* materials abut.

See figure 11.3 for flashing details.

11.7.8 *Masonry veneer tolerances*

Deviations from established lines, grades and dimensions shall be as listed in table 11.5.

Copyright Standards New Zealand

© The Crown in right of New Zealand, administered by the New Zealand Standards Executive. Access to this standard has been sponsored by the Ministry of Business, Innovation, and Employment under copyright license LN001498. You are not permitted to reproduce or distribute any part of this standard without prior written permission from Standards New Zealand, on behalf of New Zealand Standards Executive, unless your actions are covered by Part 3 of the Copyright Act 1994.

Table 11.4 – Veneer lintels (see 11.7.6.2)

Maximum lintel span	Thickness of veneer (mm)					
	70			90		
	Maximum height of veneer supported (mm)					
	350	700	2000	350	700	2000
(mm) 800	60 x 10	60 x 10	60 x 10	80 x 10	80 x 10	80 x 10
2000	60 x 60 x 6	60 x 60 x 6	60 x 60 x 6	60 x 60 x 6	60 x 60 x 6	80 x 80 x 6
2500	60 x 60 x 6	80 x 80 x 6	80 x 80 x 6	60 x 60 x 6	80 x 80 x 6	80 x 80 x 8
3000	80 x 80 x 6	80 x 80 x 6	125 x 75 x 6	80 x 80 x 6	80 x 80 x 8	90 x 90 x 10
3500	80 x 80 x 6	80 x 80 x 6	125 x 75 x 6	80 x 80 x 8	90 x 90 x 10	125 x 75 x 10
4000	80 x 80 x 8	125 x 75 x 6	125 x 75 x 10	80 x 80 x 10	125 x 75 x 6	150 x 90 x 10
4500	125 x 75 x 6	125 x 75 x 6	–	125 x 75 x 6	125 x 75 x 10	–
4800	125 x 75 x 6	125 x 75 x 10	–	125 x 75 x 6	125 x 75 x 10	–

NOTE –
60 x 10 = Mild steel flat
60 x 60 x 6 = Mild steel angle

Table 11.5 – Tolerances for masonry veneer (see 11.7.8)

Item	Tolerances
Deviation from the position shown on plan for a building more than one storey in height	15 mm
Deviation from vertical within a storey	10 mm per 3 m of height
Deviation from vertical in total height of building	20 mm
Relative vertical displacement between masonry courses	2 mm on nominated fair face (one side only) 5 mm on structural face
Relative displacement between loadbearing walls in adjacent storeys intended to be in vertical alignment	5 mm
Deviation from line in plan: (a) In any length up to 10 m (b) In any length over 10 m	 5 mm 10 mm total
Deviation of bed joint from horizontal: (a) In any length up to 10 m (b) In any length over 10 m	 5 mm 10 mm total
Average thickness of bed joint, cross joint or perpend	±3 mm on thickness specified

Copyright Standards New Zealand

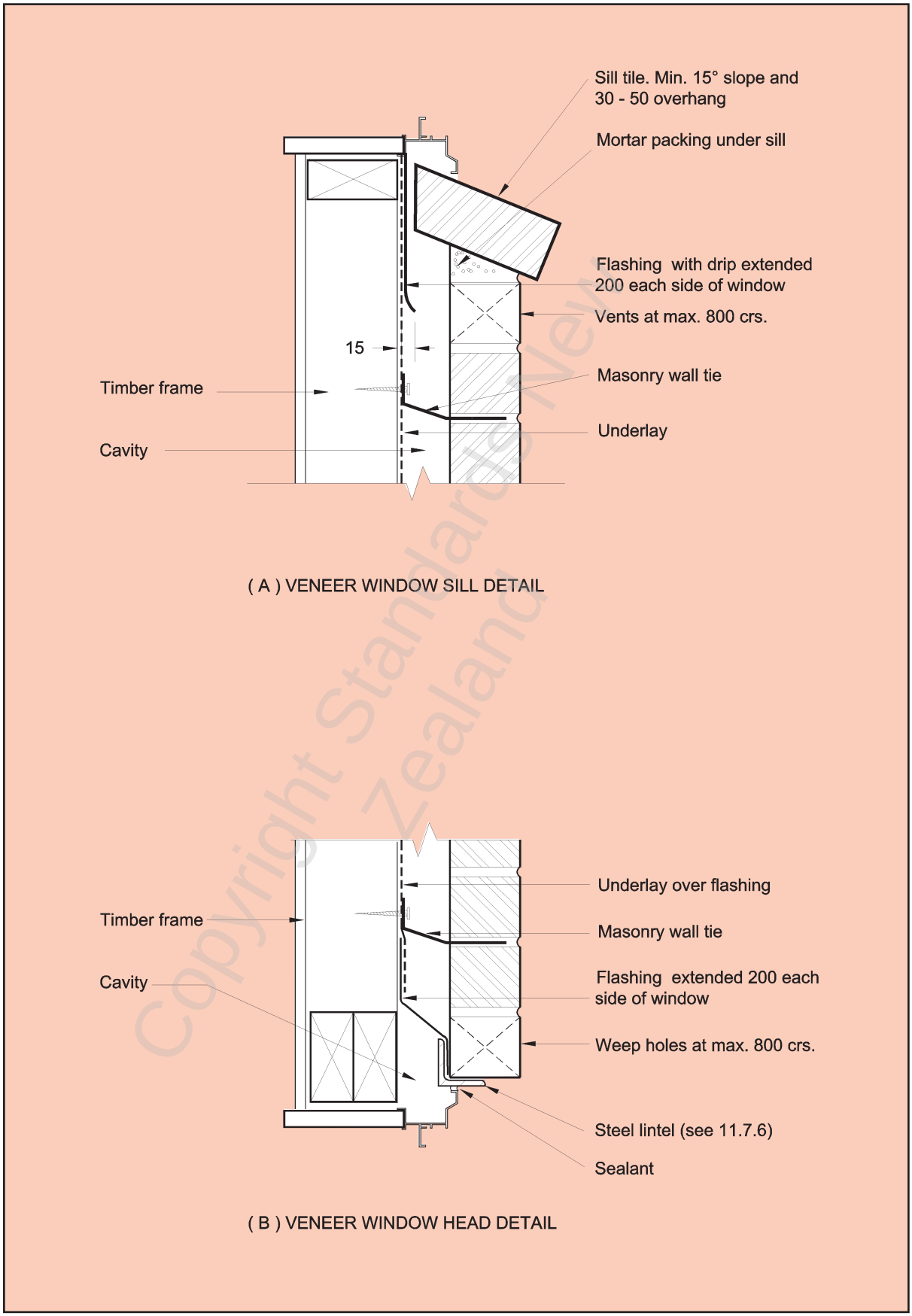

Figure 11.3 – Flashing details – Veneer (see 11.7.7)

© The Crown in right of New Zealand, administered by the New Zealand Standards Executive. Access to this standard has been sponsored by the Ministry of Business, Innovation, and Employment under copyright license LN001498. You are not permitted to reproduce or distribute any part of this standard without prior written permission from Standards New Zealand, on behalf of New Zealand Standards Executive, unless your actions are covered by Part 3 of the Copyright Act 1994.

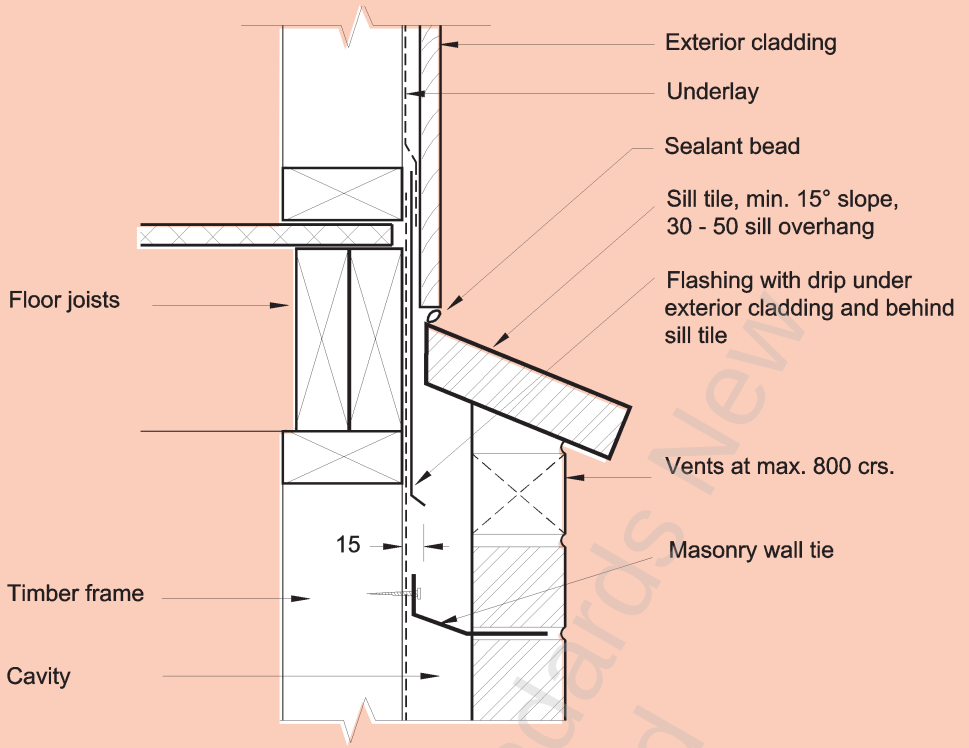

(C) VENEER INTERSTOREY DETAIL

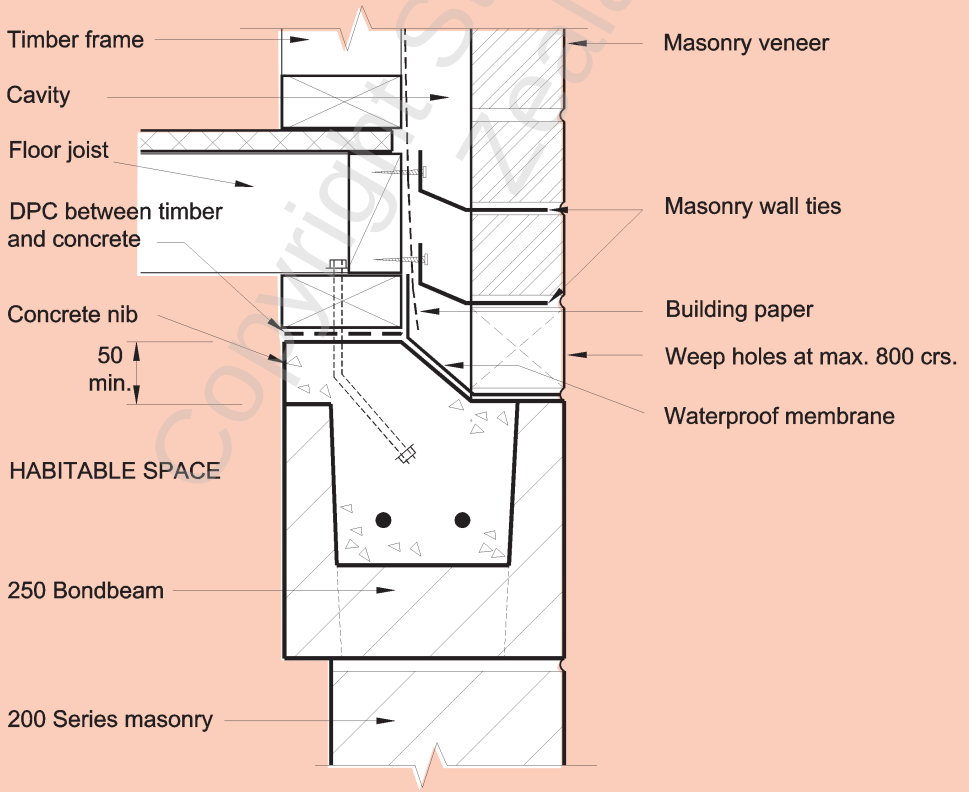

(D) VENEER UPPER FLOOR JUNCTION DETAIL

Figure 11.3 – Flashing details – Veneer (continued) (see 11.7.7)

© The Crown in right of New Zealand, administered by the New Zealand Standards Executive. Access to this standard has been sponsored by the Ministry of Business, Innovation, and Employment under copyright license LN001498. You are not permitted to reproduce or distribute any part of this standard without prior written permission from Standards New Zealand, on behalf of New Zealand Standards Executive, unless your actions are covered by Part 3 of the Copyright Act 1994.

© The Crown in right of New Zealand, administered by the New Zealand Standards Executive. Access to this standard has been sponsored by the Ministry of Business, Innovation, and Employment under copyright license LN001498. You are not permitted to reproduce or distribute any part of this standard without prior written permission from Standards New Zealand, on behalf of New Zealand Standards Executive, unless your actions are covered by Part 3 of the Copyright Act 1994.

11.8 Solid plaster exterior wall cladding (stucco)

11.8.1 *General*

11.8.1.1
The materials, proportions, mixes, *reinforcement*, fixings, flashings and application of plaster shall comply with NZS 4251.

C11.8.1.1
Recommendations in BRANZ publication "Good Stucco Practice" should be considered in conjunction with the provisions of NZS 4251.

11.8.1.2
All *framing* and internal *lining* shall be completed before the finishing coat of plaster is applied.

C11.8.1.2
Vibration or jarring of external walls should be avoided from the start of plastering until curing has been completed.

11.8.1.3
Buildings with stucco exterior *cladding* shall be supported on a continuous perimeter reinforced concrete or reinforced concrete masonry *foundation wall* or concrete slab-on-ground, and the *cladding* shall be attached to timber *stud* wall *framing*.

C11.8.1.3
Solid plaster cannot be applied to jack studs at pile spacings.

11.8.1.4
If the top of the *foundation wall* is rebated to let in the stucco, then the bottom of the rebate shall be at least 50 mm below any surface supporting a *wall plate* (see figure 11.4). The rigid backing, or the non-rigid backing and its supporting battens, shall extend to the bottom of the plaster.

11.8.1.5
Flashings shall comply with NZS 4251 (figure 11.3).

11.8.2 *Timber framing requirements*

Stucco shall be applied to a rigid backing or with a non-rigid backing. Non-rigid backing shall be supported on *studs* at 400 mm centres. Rigid backing shall be supported on studs at 600 mm maximum centres. *Studs* for use with non-rigid backing shall not exceed 2.4 m in length and for both types of backing walls shall be fitted with rows of *dwangs* which are evenly spaced and at maximum 800 mm centres.

C11.8.2
Proprietary rigid backing systems which use alternative materials or spacings are outside the scope of this Standard.

Amd 1 Dec '00

11.8.3 *Stucco on rigid backing*

11.8.3.1
Rigid backings shall comprise the following materials:

(a) Plywood; or

(b) Fibre cement sheet; or

(c) Polystyrene sheet;

complying with the following clauses.

C11.8.3
The rigid backings specified in this section ensure that the backing deflection is limited to a maximum of 5 mm when the plaster is applied. They are resistant to deterioration when in contact with moisture, and will be durable for not less than 15 years, to meet the New Zealand Building Code's durability requirement B2.3.1(b).

Cement plaster systems cannot be assumed to be completely weatherproof and it is necessary to ensure that any moisture entry does not penetrate to the structural framing, by the use of a well-maintained paint system.

11.8.3.2
Rigid backings shall be overlaid with building paper to provide a slip layer which permits the independent movement of plaster and backing (see figure 11.4).

11.8.3.3
Sheets shall be no more than 5 mm out of plane at the time of plastering.

Copyright Standards New Zealand

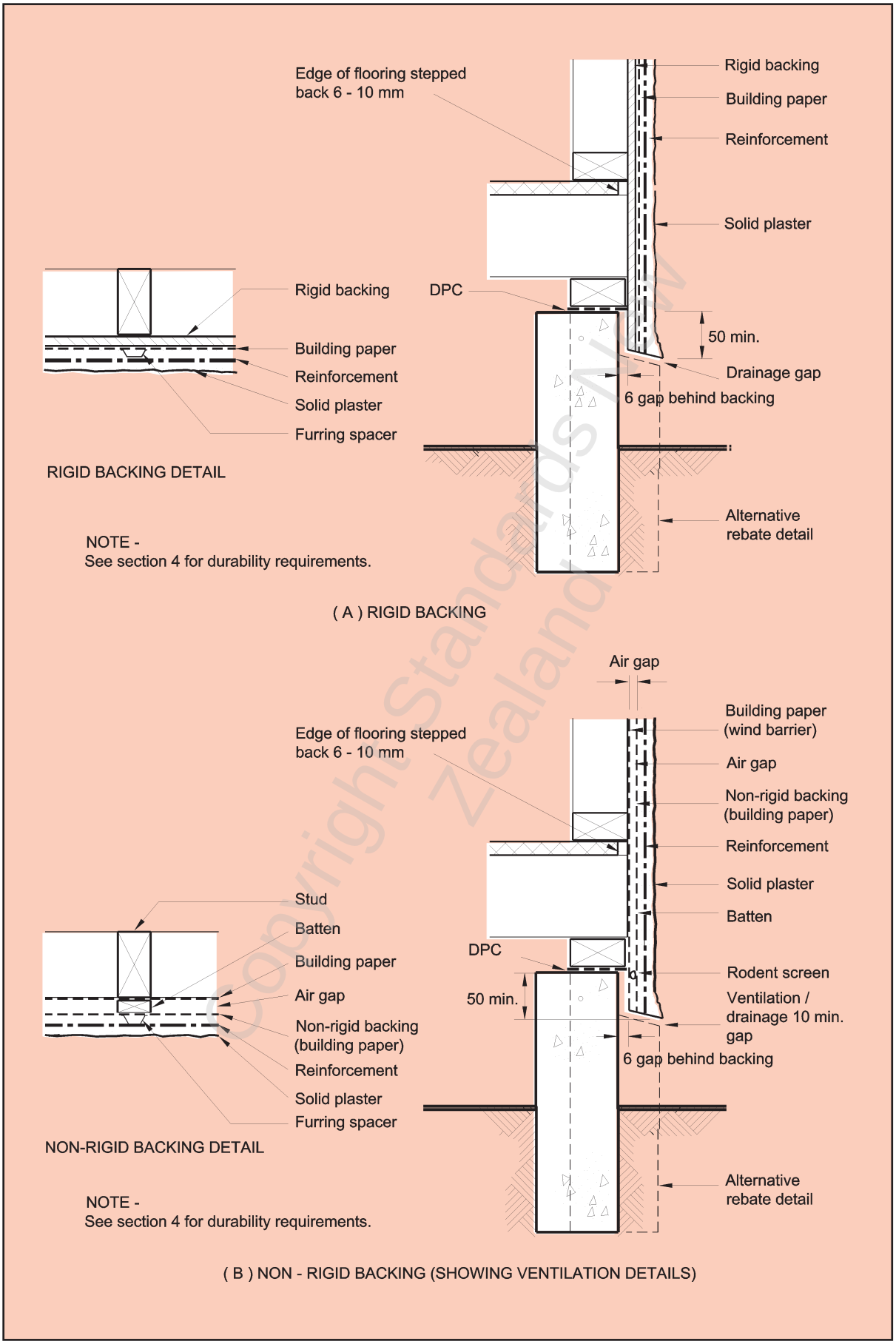

Figure 11.4 – Backing details (see 11.8.1.4 and 11.8.3.2)

© The Crown in right of New Zealand, administered by the New Zealand Standards Executive. Access to this standard has been sponsored by the Ministry of Business, Innovation, and Employment under copyright license LN001498. You are not permitted to reproduce or distribute any part of this standard without prior written permission from Standards New Zealand, on behalf of New Zealand Standards Executive, unless your actions are covered by Part 3 of the Copyright Act 1994.

© The Crown in right of New Zealand, administered by the New Zealand Standards Executive. Access to this standard has been sponsored by the Ministry of Business, Innovation, and Employment under copyright license LN001498. You are not permitted to reproduce or distribute any part of this standard without prior written permission from Standards New Zealand, on behalf of New Zealand Standards Executive, unless your actions are covered by Part 3 of the Copyright Act 1994.

11.8.4 *Plywood backings*

11.8.4.1 *Specification and thickness*
Plywood backings shall comply with AS/NZS 2269 and be treated to H3 of NZS 3640. The sheet thickness shall comply with table 11.6.

C11.8.4.1
Vertically fixed sheets need to be thicker as sheet stiffness is lower where the face veneers are parallel to the studs. 9 mm plywood sheets on studs at 400 mm is the preferred minimum, to limit distortion resulting from exposure to rain during construction.

11.8.4.2 *Fixing to timber framing*
Joints between sheets shall have gaps of 3 mm. Sheets shall be nailed to *framing* at 150 mm centres around the perimeter and at 300 mm centres within the body of the sheet.

All edges of sheets shall be supported and fixings shall be 10 mm from sheet edges.

Nails shall be hot dipped galvanized, of 2.5 mm diameter and have a length of 3 times the sheet thickness, but not less than 30 mm.

C11.8.4.2
Usually 3.15 mm diameter nails are used to maintain gaps between sheets. When the sheet joints are not supported by studs, then dwangs of sufficient width need to be added to allow fixings. When the solid backing is used as a bracing material, the fixings will need to comply with section 4.

11.8.5 *Fibre cement sheet backings*

11.8.5.1 *Specification and thickness*
Fibre cement sheet shall comply with NZS/AS 2908:Part 2. It shall have a thickness of no less than 4.5 mm and span no more than 400 mm between *stud* centres.

11.8.5.2 *Fixing to timber framing*
Joints between sheets shall have a minimum gap of 3 mm.

Sheets shall be nailed at 200 mm centres around the perimeter and at all intermediate *framing*.

Dwangs shall be provided at a maximum spacing of 800 mm.

All edges of sheets shall be supported and fixings shall be 10 mm from sheet edges.

Nails shall be hot dipped galvanized of 2.5 mm diameter and 40 mm in length. Nailing shall be started 50 mm from the corners of sheets.

C11.8.5.2
Usually 3.15 mm diameter nails are used to maintain gaps between sheets. When the sheet joints are not supported by studs then dwangs of sufficient width need to be added to allow fixing. When the solid backing is used as a bracing material, the fixings will need to comply with section 4.

11.8.6 *Polystyrene sheet*

11.8.6.1 *Specification and thickness*
Expanded or extruded polystyrene sheet manufactured to AS 1366.3, shall be no less than 20 mm thick when spanning up to 400 mm, or 30 mm thick when spanning up to 600 mm.

Copyright Standards New Zealand

Table 11.6 – Plywood sheet thickness (see 11.8.4.1)

	Sheets vertical			Sheets horizontal		
	Stud spacing (mm)			Stud spacing (mm)		
	400	480	600	400	480	600
Plywood sheet thickness (mm)	12	12	15	9	9	12

© The Crown in right of New Zealand, administered by the New Zealand Standards Executive. Access to this standard has been sponsored by the Ministry of Business, Innovation, and Employment under copyright license LN001498. You are not permitted to reproduce or distribute any part of this standard without prior written permission from Standards New Zealand, on behalf of New Zealand Standards Executive, unless your actions are covered by Part 3 of the Copyright Act 1994.

Amd 1
Dec '00

At floor level, the bottom edge of the polystyrene shall be supported by a bead, stop or by a rebated concrete *foundation* or floor slab.

C11.8.6.2
Because of the thickness of the polystyrene and the plaster, a considerable weight of the cladding is supported by cantilever action on the fixings. It is necessary to distribute this load and ensure the fixings are firmly attached to the framing. When the sheet joints are not supported by studs, then dwangs of sufficient width need to be added to allow fixing.

Solid plaster (stucco) systems to Part 1 of NZS 4251 are not bonded to any rigid backing including polystyrene. This is different from the situation where a proprietary modified plaster system (EIFS) is applied with a tape mesh reinforcement, which is bonded direct to the surface of the polystyrene.

11.8.6.2 *Fixing to timber frame*
Sheets shall be nailed at 250 mm centres, ensuring a minimum 35 mm penetration into the frame, around the perimeter and within the body of the sheet, where it crosses *studs* or *dwangs*.

All edges of sheets shall be supported and fixings shall be 15 mm from sheet edge and between 50 mm and 75 mm from sheet corners.

Nails shall be hot dipped galvanized used with 40 mm diameter plastic washers.

11.8.7 *Building paper*
The building paper shall be free from holes or breaks and comply with NZS 2295. The building paper shall be run horizontally and lapped not less than 75 mm at joints, with the direction of the lap ensuring that water is shed to the outside of the paper, with the upper sheet lapped over the lower sheet.

C11.8.8
Stucco systems cannot be assumed to be completely weatherproof and it is necessary to ensure that any moisture entry does not penetrate to the structural framing, by the use of a well-maintained paint system.

11.8.8 *Stucco on non-rigid backing*
A cavity shall be provided between the backing and the inner layer of building paper (which shall be a wind barrier). The cavity shall be ventilated and be drained to the outside with bottom openings. The cavity shall be sealed off from the roof space and vermin proofed at the bottom of the cavity.

11.8.9 *Fixing of non-rigid backing to stud framing*
Non-rigid backings shall be installed in the following manner:

(a) Fix 20 mm thick, H3.1 (NZS 3640) treated vertical battens, through the wind barrier, to the *studs* with 60 x 2.8 mm hot dipped galvanized flat-head nails at maximum 300 mm centres;

(b) Horizontal battens are required at heads and sills of openings and at eaves level. Where horizontal battens are used on *dwangs* they shall be slightly (about 5 mm) out of horizontal and 50 mm short of vertical *battens,* to prevent water being trapped by the battens (see figure 11.4).

(c) The non-rigid backing shall be provided with support to keep it taut to limit its deflection no more than 5 mm. This shall be achieved by the use of 75 mm galvanized wire mesh, or by plastic tape or wire at 150 mm centres run over the battens; and

(d) Fix the non-rigid backing (building paper) over the outside of the battens on top of a support system in (c) before fixing the reinforcement.

11.9 Windows

11.9.1
Windows and their fixings shall comply with the relevant strength and weathertightness requirements of NZS 4211.

Copyright Standards New Zealand

© The Crown in right of New Zealand, administered by the New Zealand Standards Executive. Access to this standard has been sponsored by the Ministry of Business, Innovation, and Employment under copyright license LN001498. You are not permitted to reproduce or distribute any part of this standard without prior written permission from Standards New Zealand, on behalf of New Zealand Standards Executive, unless your actions are covered by Part 3 of the Copyright Act 1994.

SECTION 12

INTERIOR LININGS

12.1 General **12**-3

Copyright Standards New Zealand

© The Crown in right of New Zealand, administered by the New Zealand Standards Executive. Access to this standard has been sponsored by the Ministry of Business, Innovation, and Employment under copyright license LN001498. You are not permitted to reproduce or distribute any part of this standard without prior written permission from Standards New Zealand, on behalf of New Zealand Standards Executive, unless your actions are covered by Part 3 of the Copyright Act 1994.

Copyright Standards New Zealand

© The Crown in right of New Zealand, administered by the New Zealand Standards Executive. Access to this standard has been sponsored by the Ministry of Business, Innovation, and Employment under copyright license LN001498. You are not permitted to reproduce or distribute any part of this standard without prior written permission from Standards New Zealand, on behalf of New Zealand Standards Executive, unless your actions are covered by Part 3 of the Copyright Act 1994.

12 INTERIOR LININGS

12.1 General

Amd 1 Dec '00

Interior *linings* are not a general requirement of this Standard. However, when selected *linings* are used as part of a wall *bracing* or ceiling *diaphragm* system, they shall comply with sections 4, 5 and 8 or section 13 respectively. The interior *lining* on each side of a wall shall weigh less than 12.0 kg/m^2.

C12.1

Linings may also provide in part for other NZBC provisions, such as fire safety, acoustic separation, interior moisture and hygienic surfaces; but these and other such uses are outside the scope of this Standard.

Copyright Standards New Zealand

NOTES

© The Crown in right of New Zealand, administered by the New Zealand Standards Executive. Access to this standard has been sponsored by the Ministry of Business, Innovation, and Employment under copyright license LN001498. You are not permitted to reproduce or distribute any part of this standard without prior written permission from Standards New Zealand, on behalf of New Zealand Standards Executive, unless your actions are covered by Part 3 of the Copyright Act 1994.

Copyright Standards New Zealand

© The Crown in right of New Zealand, administered by the New Zealand Standards Executive. Access to this standard has been sponsored by the Ministry of Business, Innovation, and Employment under copyright license LN001498. You are not permitted to reproduce or distribute any part of this standard without prior written permission from Standards New Zealand, on behalf of New Zealand Standards Executive, unless your actions are covered by Part 3 of the Copyright Act 1994.

SECTION 13

CEILINGS

13.1 Ceiling linings **13**-3
13.2 Ceiling lining supports **13**-3
13.3 Openings in ceilings **13**-5
13.4 Water tanks in the roof space **13**-7
13.5 Structural ceiling diaphragms **13**-8
13.6 Nailing schedule for ceilings **13**-9

Table

13.1 Ceiling battens **13**-3
13.2 Thickness of trimmers and trimming joists **13**-5
13.3 Nailing schedule for hand driven and power driven nails **13**-10

Figure

13.1 Ceiling lining supports **13**-4
13.2 Openings in ceilings **13**-6
13.3 Support of water tanks in the roof space **13**-7
13.4 Ceiling diaphragms **13**-8

Copyright Standards New Zealand

© The Crown in right of New Zealand, administered by the New Zealand Standards Executive. Access to this standard has been sponsored by the Ministry of Business, Innovation, and Employment under copyright license LN001498. You are not permitted to reproduce or distribute any part of this standard without prior written permission from Standards New Zealand, on behalf of New Zealand Standards Executive, unless your actions are covered by Part 3 of the Copyright Act 1994.

Copyright Standards New Zealand

© The Crown in right of New Zealand, administered by the New Zealand Standards Executive. Access to this standard has been sponsored by the Ministry of Business, Innovation, and Employment under copyright license LN001498. You are not permitted to reproduce or distribute any part of this standard without prior written permission from Standards New Zealand, on behalf of New Zealand Standards Executive, unless your actions are covered by Part 3 of the Copyright Act 1994.

13 CEILINGS

13.1 Ceiling linings

Ceiling *linings* are not a general requirement of this Standard; however, certain *linings* may be utilized to provide *bracing* strength. Such *linings* shall be designed as ceiling *diaphragms* in accordance with 13.5. Other ceilings, where provided, shall be supported from *framing* timbers as described in this section. Ceiling material shall be less than 17.5 kg/m^2.

13.2 Ceiling lining supports

13.2.1 *Truss roofs*

The *framing* timbers required for the support of ceiling *linings* under trussed roofs shall be any one, or any combination of the following:

(a) Bottom chords of trusses;

(b) 70 mm x 45 mm solid dwanging on edge, as shown in figure 13.1 or on the flat, at not more than 900 mm centres and spanning between bottom chords;

(c) *Ceiling battens* attached to the underside of bottom chords shall be of Merchantable Grade or better, in accordance with NZS 3602, and be of dimensions set out in table 13.1.

(See figure 13.1).

13.2.2 *Framed roofs and floors*

The *framing* timbers required for the support of ceiling *linings* under framed roofs or floors shall be any one, or any combination of the following (see figure 13.1):

(a) Ceiling *joists* complying with 10.2.1.6 or floor *joists* complying with 7.1;

(b) *Rafters* complying with 10.2.1.3 (see especially 10.2.1.3.7);

(c) 70 mm x 45 mm solid dwanging on edge or on the flat (as shown in figure 13.1) at not more than 900 mm centres and spanning between ceiling *joists*, floor *joists* or *rafters*;

(d) *Ceiling battens* having the dimension given by table 13.1 attached to the underside of *rafters*, floor *joists* or ceiling *joists* shall be of Merchantable Grade or better, in accordance with NZS 3602, and be of the dimensions set out in table 13.1.

C13.2.1

Ceiling battens and solid dwanging can serve not only to support ceiling lining but also to provide lateral support to bottom chords, against buckling in compression, as a result of wind uplift forces on the roof.

Battens 70 mm x 35 mm in size are quite often used at 600 centres to allow for greater tolerance to fix ceiling linings.

Table 13.1 – Ceiling battens (see 13.2.1 and 13.2.2)

Maximum spacing of ceiling battens	Size of ceiling battens for a maximum span (mm) of:		
	600	900	1200
(mm)	(mm x mm)	(mm x mm)	(mm x mm)
400	35 x 19	70 x 35	70 x 35
600	70 x 19	70 x 35	70 x 35

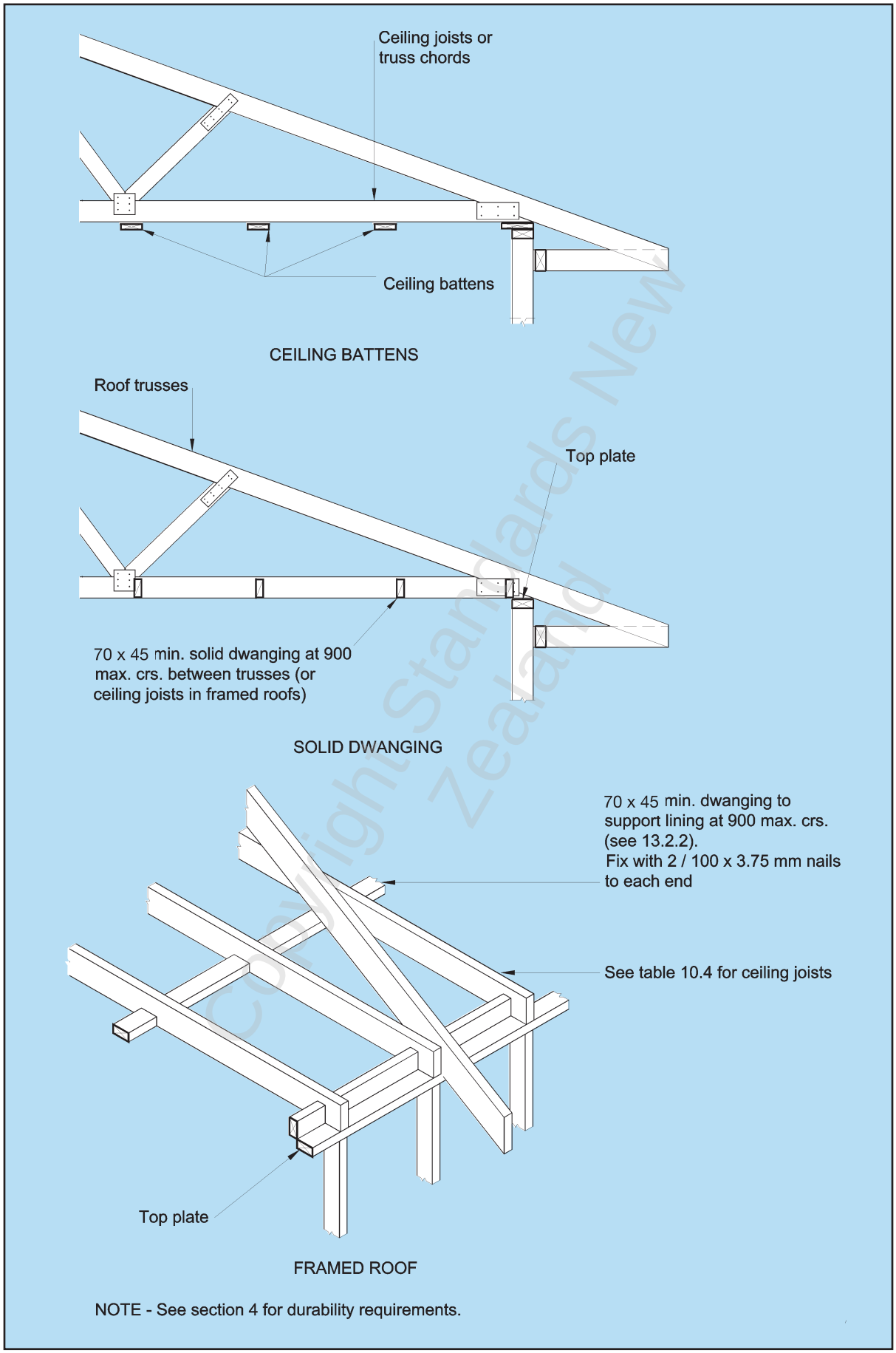

Figure 13.1 – Ceiling lining supports (see 13.2.1 and 13.2.2)

© The Crown in right of New Zealand, administered by the New Zealand Standards Executive. Access to this standard has been sponsored by the Ministry of Business, Innovation, and Employment under copyright license LN001498. You are not permitted to reproduce or distribute any part of this standard without prior written permission from Standards New Zealand, on behalf of New Zealand Standards Executive, unless your actions are covered by Part 3 of the Copyright Act 1994.

© The Crown in right of New Zealand, administered by the New Zealand Standards Executive. Access to this standard has been sponsored by the Ministry of Business, Innovation, and Employment under copyright license LN001498. You are not permitted to reproduce or distribute any part of this standard without prior written permission from Standards New Zealand, on behalf of New Zealand Standards Executive, unless your actions are covered by Part 3 of the Copyright Act 1994.

13.3 Openings in ceilings

13.3.1
Where access to ceiling space is required through the ceiling, a clear opening not less than 600 mm x 500 mm shall be provided, giving easy unobstructed access of at least 600 mm in height between the top of the ceiling *joists* and other roof members (see figure 13.2).

13.3.2
Openings in ceilings shall be bounded by *trimmers* and *trimming joists*.

13.3.3
Trimmers shall be the same depth as the curtailed ceiling *joists* and their thickness (see figure 13.2 and table 13.2) shall be:

(a) For *trimmer* spans up to 1.2 m, the same thickness as the *curtailed joists*;

(b) For *trimmer* spans over 1.2 m and up to 2.4 m, 25 mm thicker than the *curtailed joists*;

(c) For *trimmer* spans over 2.4 m and up to 3 m, 50 mm thicker than the *curtailed joists*.

13.3.4
Trimming joists shall be the same depth as the curtailed ceiling *joists* and their thickness (see figure 13.2 and table 13.2) shall be:

(a) For *trimmer* spans up to 1.2 m:

(i) For *trimming joist* spans up to 3 m, the same thickness as the *curtailed joists*;

(ii) For *trimming joist* spans over 3 m, 25 mm thicker than the *curtailed joists*;

(b) For *trimmer* spans up to 3 m, 50 mm thicker than the *curtailed joists*.

Copyright Standards New Zealand

Table 13.2 – Thickness of trimmers and trimming joists (see 13.3.3 and 13.3.4)

Trimmer and trimming joist thicknesses	**Trimmer span** (m)		
	Up to 1.2	**Over 1.2 up to 2.4**	**Over 2.4 up to 3.0**
Trimmer thickness	t	t + 25 mm	t + 50 mm
Trimming joist thickness			
Trimming joist span up to 3.0 m	t	t + 50 mm	t + 50 mm
Trimming joist span over 3.0 m	t + 25 mm	t + 50 mm	t + 50 mm
t = Thickness of curtailed joist (mm)			

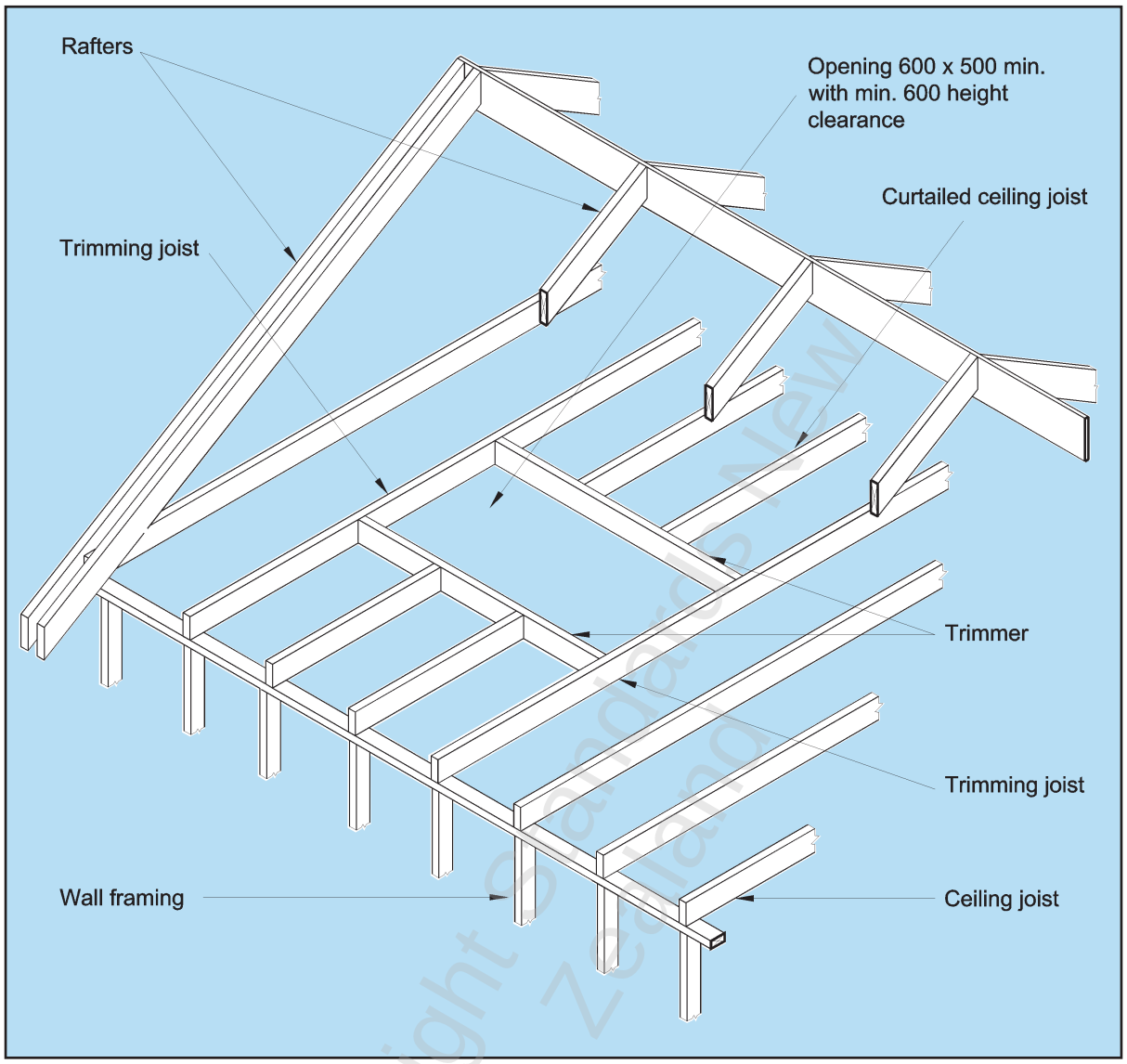

Figure 13.2 – Openings in ceilings (see 13.3.1)

13.4 Water tanks in the roof space

13.4.1

Water tanks (supply tanks or hot water cylinders) in the roof space shall not exceed 200 litres in capacity. Tanks shall be supported on a base and located as shown in figure 13.3.

13.4.2

Lateral restraint of the tanks needs to be considered but is outside the scope of this Standard.

© The Crown in right of New Zealand, administered by the New Zealand Standards Executive. Access to this standard has been sponsored by the Ministry of Business, Innovation, and Employment under copyright license LN001498. You are not permitted to reproduce or distribute any part of this standard without prior written permission from Standards New Zealand, on behalf of New Zealand Standards Executive, unless your actions are covered by Part 3 of the Copyright Act 1994.

Copyright Standards New Zealand

© The Crown in right of New Zealand, administered by the New Zealand Standards Executive. Access to this standard has been sponsored by the Ministry of Business, Innovation, and Employment under copyright license LN001498. You are not permitted to reproduce or distribute any part of this standard without prior written permission from Standards New Zealand, on behalf of New Zealand Standards Executive, unless your actions are covered by Part 3 of the Copyright Act 1994.

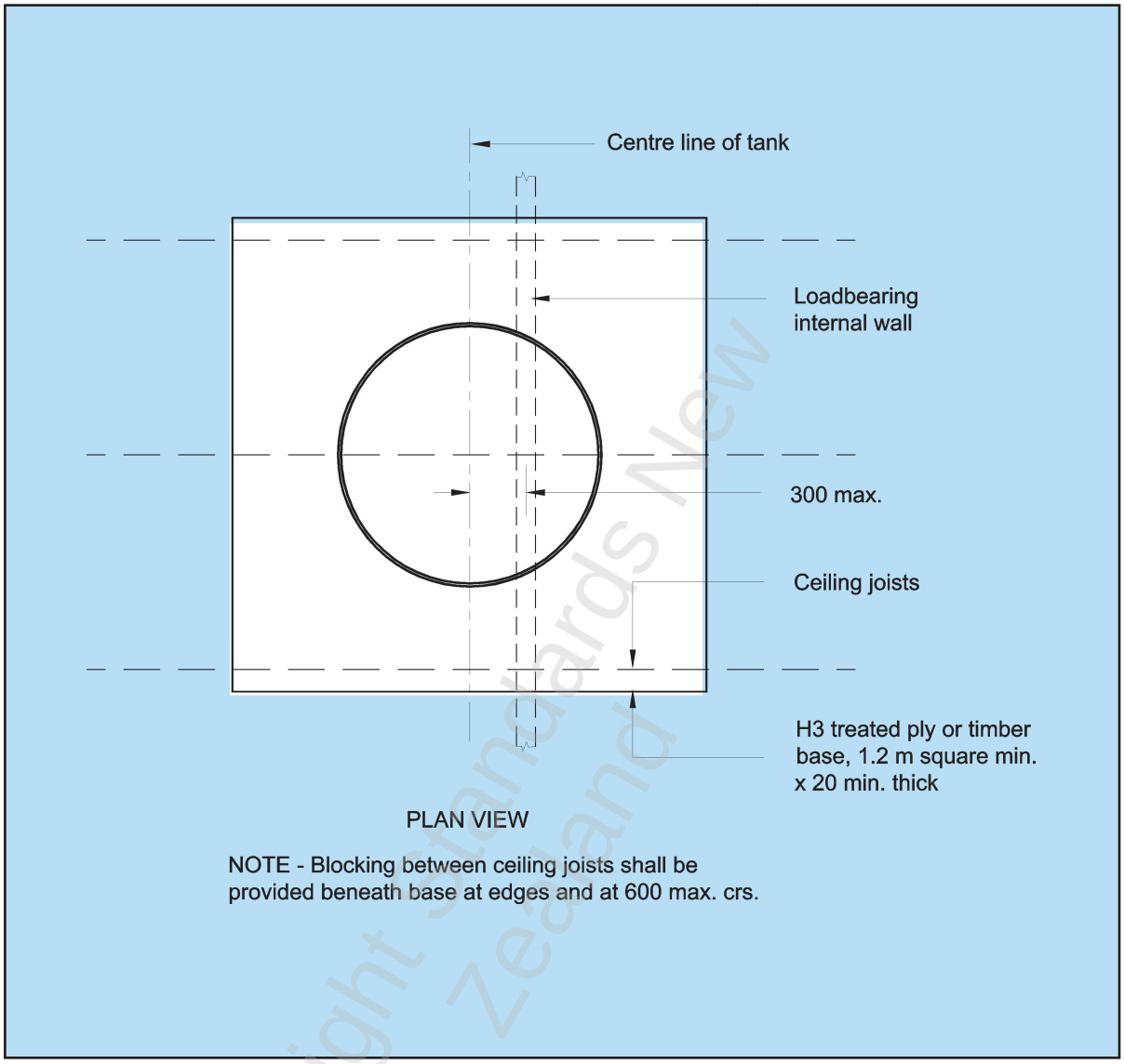

Figure 13.3 – Support of water tanks in the roof space (see 13.4.1)

13.5 Structural ceiling diaphragms

13.5.1

Ceiling *diaphragm*s required to comply with 5.6.1(b) shall be constructed as follows (see figure 13.4):

(a) The length of the *diaphragm* shall not exceed twice its width, both length and width being measured between supporting walls;

(b) The ceiling *lining* shall consist of a sheet material complying with 13.5.2 over the entire area of the *diaphragm*;

(c) Complete sheets with a minimum size of 1800 x 900 shall be used except where building dimensions prevent their use;

(d) Each sheet shall be fastened as shown in figure 13.4;

(e) Fastenings shall be not less than 10 mm from sheet edges.

Copyright Standards New Zealand

© The Crown in right of New Zealand, administered by the New Zealand Standards Executive. Access to this standard has been sponsored by the Ministry of Business, Innovation, and Employment under copyright license LN001498. You are not permitted to reproduce or distribute any part of this standard without prior written permission from Standards New Zealand, on behalf of New Zealand Standards Executive, unless your actions are covered by Part 3 of the Copyright Act 1994.

C13.5.2

Clause 13.5 refers to the slope (if any) of the ceiling, not of the roof. Sloping ceilings are often at the same slope as the roof above.

13.5.2

Ceiling *lining* material for ceiling *diaphragms* shall be:

(a) For *diaphragms* not steeper than 25° to the horizontal and not exceeding 7.5 m long under *light or heavy roofs*; a gypsum-based sheet material not less than 8 mm thick or any material permitted by 13.5.2(b);

(b) For *diaphragms* not steeper than 25° to the horizontal and not exceeding 15 m long under *light or heavy roofs*:

(i) Plywood not less than 6 mm thick three-ply; or

(ii) Any other wood- or fibre-cement based product not less than 4.5 mm thick having a density not less than 880 kg/m^3(e.g. hardboard); or

(iii) Any other wood- or fibre-cement based product not less than 6 mm thick having a density not less than 600 kg/m^3 (e.g. particleboard).

(c) For *diaphragms* not steeper than 45° to the horizontal and not exceeding 7.5 m long under *light or heavy roofs*:

as for (b) above.

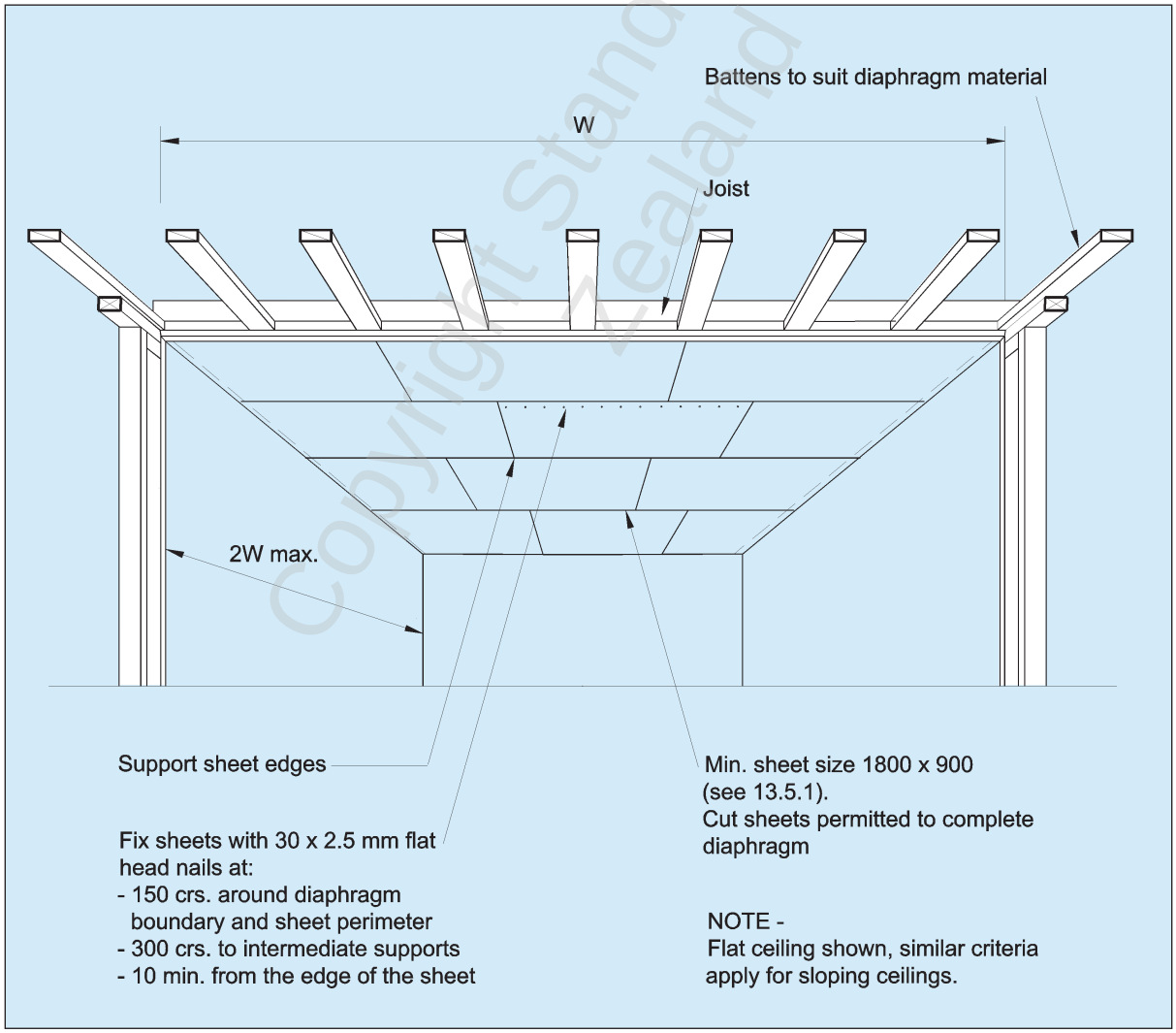

Figure 13.4 – Ceiling diaphragms (see 13.5.1)

© The Crown in right of New Zealand, administered by the New Zealand Standards Executive. Access to this standard has been sponsored by the Ministry of Business, Innovation, and Employment under copyright license LN001498. You are not permitted to reproduce or distribute any part of this standard without prior written permission from Standards New Zealand, on behalf of New Zealand Standards Executive, unless your actions are covered by Part 3 of the Copyright Act 1994.

13.6 Nailing schedule for ceilings

Table 13.3 lists the size, number and location of nails to be used in ceilings. See 2.4 and 4.4.6 for other requirements for nails.

Table 13.3 – Nailing schedule for hand driven and power driven nails (see 13.6)

Joint	Hand driven nails		Power driven nails	
	Length (mm) x diameter (mm) and type	Number and location	Length (mm) x diameter (mm) and type	Number and location
Ceiling framing				
Sheet material for ceiling diaphragm to: (a) Framing members at sheet edges (b) Intermediate supports	30 x 2.5 FH	150 mm centres 200 mm centres		
Ceiling batten to top plate	75 x 3.15	1	75 x 3.06	1
Ceiling joist to top plate	100 x 3.75	2 (skewed)	90 x 3.15	3 (skewed)
Ceiling joist to rafter	100 x 3.75	3	90 x 3.15	4
Lapped joint in joist	100 x 3.75	2 (each side)	90 x 3.15	4 (each side)
Flitched joint in joist	100 x 3.75	4 (each end)	90 x 3.15	6 (each end)
Ceiling runner to top plate packer	100 x 3.75	2 (skewed)	90 x 3.15	2 (skewed)
Ceiling runner to ceiling joist	100 x 3.75	2 (skewed)	90 x 3.15	4 (skewed)
Hanger to runner or joist	100 x 3.75	2	90 x 3.15	3
Ceiling batten to joist, rafter or truss: (a) 45 mm x 19 mm (b) 70 mm x 35 mm	60 x 2.8 or 57 x 11.1 x 1.8 staple 75 x 3.15	1 1 2	60 x 2.8 75 x 3.06	1 2
Dragon tie to top plate or blocking piece: 90 mm x 35 mm	100 x 3.75	3	90 x 3.15	5
Dragon tie to joist, truss, or rafter: 90 mm x 35 mm	100 x 3.75	2	90 x 3.15	2
Blocking piece to top plate truss, joist or rafter	100 x 3.75	4	90 x 3.15	6

NOTE –

(1) Nail lengths and diameters are the minimum required.

(2) Refer to 4.4 for required protective coatings for metal fasteners.

Copyright Standards New Zealand

NOTES

© The Crown in right of New Zealand, administered by the New Zealand Standards Executive. Access to this standard has been sponsored by the Ministry of Business, Innovation, and Employment under copyright license LN001498. You are not permitted to reproduce or distribute any part of this standard without prior written permission from Standards New Zealand, on behalf of New Zealand Standards Executive, unless your actions are covered by Part 3 of the Copyright Act 1994.

Copyright Standards New Zealand

© The Crown in right of New Zealand, administered by the New Zealand Standards Executive. Access to this standard has been sponsored by the Ministry of Business, Innovation, and Employment under copyright license LN001498. You are not permitted to reproduce or distribute any part of this standard without prior written permission from Standards New Zealand, on behalf of New Zealand Standards Executive, unless your actions are covered by Part 3 of the Copyright Act 1994.

SECTIONS 14, 15 AND 16

ADDITIONAL INFORMATION (NORMATIVE)

The term "normative" has been used in this Standard to define the application of this additional information. "Normative" information is an integral part of this Standard.

Copyright Standards New Zealand

© The Crown in right of New Zealand, administered by the New Zealand Standards Executive. Access to this standard has been sponsored by the Ministry of Business, Innovation, and Employment under copyright license LN001498. You are not permitted to reproduce or distribute any part of this standard without prior written permission from Standards New Zealand, on behalf of New Zealand Standards Executive, unless your actions are covered by Part 3 of the Copyright Act 1994.

Copyright Standards New Zealand

© The Crown in right of New Zealand, administered by the New Zealand Standards Executive. Access to this standard has been sponsored by the Ministry of Business, Innovation, and Employment under copyright license LN001498. You are not permitted to reproduce or distribute any part of this standard without prior written permission from Standards New Zealand, on behalf of New Zealand Standards Executive, unless your actions are covered by Part 3 of the Copyright Act 1994.

SECTION 14

REQUIREMENTS FOR 3 kPa FLOOR LOADS

ADDITIONAL INFORMATION (NORMATIVE)

14.1 General **14**-3

14.2 Concrete slab-on-ground **14**-3

Table

14.1 – 14.3 Bracing demand for 3 kPa floor loads ..... **14**-4 – **14**-6

14.4 Bearers, 3 kPa floor load **14**-7

14.5 Subfloor jack studs, 3 kPa floor load **14**-7A

14.6 Square pile footings for 3 kPa floor load **14**-8

Amd 2 May '06

14.7 Spacing of M12 bolts supporting stringers for 3 kPa floor load **14**-8

14.8 Floor joists for 3 kPa floor load **14**-9

14.9 Strip flooring for 3 kPa floor load **14**-9A

Amd 2 May '06

14.10 Studs in loadbearing walls for heavy or light roofs with medium wall claddings or light wall claddings for 3 kPa floor load **14**-10

14.11 Reference table for lintel load cases **14**-11

14.12 Lintels supporting roof, wall and floor for 3 kPa floor load **14**-11

14.13 Lintels supporting wall and floor only for 3 kPa floor load **14**-12

14.14 Lintels supporting floor only for 3 kPa floor load **14**-12A

Amd 2 May '06

14.15 Top and bottom plates for loadbearing walls, 3 kPa floor load **14**-13

14.16 Structural plywood flooring **14**-14

Copyright Standards New Zealand

© The Crown in right of New Zealand, administered by the New Zealand Standards Executive. Access to this standard has been sponsored by the Ministry of Business, Innovation, and Employment under copyright license LN001498. You are not permitted to reproduce or distribute any part of this standard without prior written permission from Standards New Zealand, on behalf of New Zealand Standards Executive, unless your actions are covered by Part 3 of the Copyright Act 1994.

Copyright Standards New Zealand

14 REQUIREMENTS FOR 3 kPA FLOOR LOADS

14.1 General

14.1.1

NZS 3604 as modified by tables 14.1 – 14.16 shall be used for the design of buildings with 3 kPa floor loadings. This section details the increased requirements for the design of structural components (*framing*, subfloor, flooring and fixings) and the increased earthquake *bracing demand*. All other aspects of NZS 3604 remain unchanged.

C14.1

This section does not cover garages with timber floors where wheel loads are 9 kN and exceed the maximum concentrated load in 1.1.2(e)(v).

14.2 Concrete slab-on-ground

Concrete slab-on-ground where required to carry more than 3 kPa loading shall be the subject of *specific engineering design*.

C14.2

For the design of floors carrying such loads it becomes necessary to consider the subgrade properties of strength and deflection as well as the thickness of base material which may result in thicker granular bases and/or concrete slabs.

Copyright Standards New Zealand

© The Crown in right of New Zealand, administered by the New Zealand Standards Executive. Access to this standard has been sponsored by the Ministry of Business, Innovation, and Employment under copyright license LN001498. You are not permitted to reproduce or distribute any part of this standard without prior written permission from Standards New Zealand, on behalf of New Zealand Standards Executive, unless your actions are covered by Part 3 of the Copyright Act 1994.

© The Crown in right of New Zealand, administered by the New Zealand Standards Executive. Access to this standard has been sponsored by the Ministry of Business, Innovation, and Employment under copyright license LN001498. You are not permitted to reproduce or distribute any part of this standard without prior written permission from Standards New Zealand, on behalf of New Zealand Standards Executive, unless your actions are covered by Part 3 of the Copyright Act 1994.

Table 14.1 – Bracing demand for various combinations of claddings for single storey buildings on subfloor framing, 3 kPa floor loads (see 5.3.1)

Subfloor cladding	Single storey cladding	Roof cladding	Roof pitch degrees	Foundation structures			Single storey walls		
				Earthquake zones					
				A	B	C	A	B	C
				Bracing demand in BUs/m^2 of floor area					
Light	Light	Light	0-25	10.4	7.8	5.2	7.0	5.3	3.5
			26-45	10.8	8.1	5.4	7.5	5.6	3.8
			46-60	11.5	8.6	8.4	8.4	6.3	4.2
Medium	Light	Light	0-25	10.9	8.2	5.4	7.2	5.4	3.6
			26-45	11.3	8.4	5.6	7.7	5.8	3.8
			46-60	12.0	9.0	6.0	8.6	6.4	4.3
Heavy	Light	Light	0-25	12.2	9.2	6.1	7.6	5.7	3.8
			26-45	12.6	9.4	6.3	8.1	6.1	4.1
			46-60	13.3	10.0	6.7	9.1	6.8	4.5
Light	Light	Heavy	0-25	13.1	9.8	6.6	10.2	7.7	5.1
			26-45	14.2	10.7	7.1	11.5	8.6	5.7
			46-60	16.4	12.3	8.2	13.8	10.4	6.9
Medium	Light	Heavy	0-25	13.6	10.2	6.8	10.4	7.8	5.2
			26-45	14.7	11.0	7.4	11.7	8.8	5.9
			46-60	16.9	12.7	8.4	14.1	10.5	7.0
Heavy	Light	Heavy	0-25	14.9	11.2	7.5	11.0	8.3	5.5
			26-45	16.0	12.0	8.0	12.3	9.2	6.2
			46-60	18.2	13.6	9.1	14.7	11.0	7.4
Medium and Heavy	Medium	Heavy	0-25	15.3	11.5	7.6	11.6	8.7	5.8
			26-45	16.4	12.3	8.2	12.9	9.7	6.4
			46-60	18.6	13.9	9.3	15.3	11.4	7.6
Medium	Medium	Light	0-25	12.3	9.4	6.3	8.3	6.2	4.2
			26-45	13.0	9.7	6.5	8.8	6.6	4.4
			46-60	13.7	10.3	6.8	9.7	7.3	4.8
Heavy	Medium	Light	0-25	13.9	10.4	7.0	8.7	6.6	4.4
			26-45	14.3	10.7	7.1	9.2	6.9	4.6
			46-60	15.0	11.3	7.5	10.2	7.6	5.1
Heavy	Heavy	Heavy	0-25	21.4	16.0	10.7	15.3	11.5	7.7
			26-45	22.5	16.9	11.3	16.7	12.5	8.3
			46-60	24.7	18.5	12.3	19.2	14.4	9.6
Heavy	Heavy	Light	0-25	18.7	14.0	9.3	11.9	8.9	5.9
			26-45	19.1	14.3	9.5	12.4	9.3	6.2
			46-60	19.8	14.8	9.9	13.3	10.0	6.7

Copyright Standards New Zealand

© The Crown in right of New Zealand, administered by the New Zealand Standards Executive. Access to this standard has been sponsored by the Ministry of Business, Innovation, and Employment under copyright license LN001498. You are not permitted to reproduce or distribute any part of this standard without prior written permission from Standards New Zealand, on behalf of New Zealand Standards Executive, unless your actions are covered by Part 3 of the Copyright Act 1994.

Table 14.2 – Bracing demand for various combinations of claddings for 2 storey buildings on subfloor framing, 3 kPa floor loads (see 5.3.1)

Bottom storey cladding	Top storey cladding	Roof cladding	Roof pitch degrees	Foundation structures			Bottom storey			Top storey		
				Earthquake zones								
				A	B	C	A	B	C	A	B	C
				Bracing demand in BUs/m^2 of floor area								
Light	Light	Light	0-25	17.0	12.7	8.5	14.9	11.2	7.5	7.4	5.6	3.7
			26-45	17.4	13.0	8.7	15.3	11.5	7.7	8.0	6.0	4.0
			46-60	18.1	13.6	9.0	16.1	12.1	8.1	9.0	6.7	4.5
Medium	Light	Light	0-25	18.9	14.2	9.5	16.6	12.5	8.3	7.6	5.7	3.8
			26-45	19.3	14.5	9.7	17.0	12.8	8.5	8.2	6.2	4.1
			46-60	20.0	15.0	10.0	17.8	13.4	8.9	9.2	6.9	4.6
Heavy	Light	Light	0-25	24.4	18.3	12.2	21.3	16.0	10.7	8.3	6.2	4.1
			26-45	24.7	18.6	12.4	21.8	16.3	10.9	8.8	6.6	4.4
			46-60	25.5	19.1	12.7	22.5	16.9	11.3	9.9	7.5	5.0
Light	Light	Heavy	0-25	19.7	14.8	9.8	17.8	13.4	8.9	11.1	8.3	5.5
			26-45	20.8	15.6	10.4	19.0	14.3	9.5	12.5	9.4	6.2
			46-60	22.4	17.2	11.5	21.3	16.0	10.6	15.1	11.3	7.5
Medium	Light	Heavy	0-25	21.6	16.2	10.8	19.5	14.7	9.8	11.4	8.6	5.7
			26-45	22.8	17.1	11.4	20.7	15.6	10.4	12.9	9.7	6.4
			46-60	24.9	18.7	12.5	23.0	17.2	11.5	15.5	11.6	7.8
Heavy	Light	Heavy	0-25	27.1	20.3	13.5	24.3	18.2	12.1	12.3	9.2	6.1
			26-45	28.2	21.2	14.1	25.5	19.1	12.8	13.8	10.4	6.9
			46-60	30.4	22.8	15.2	27.8	20.8	13.9	16.6	12.5	8.3
Medium and Heavy	Medium	Heavy	0-25	24.0	18.0	12.0	21.7	16.3	10.8	12.5	9.3	6.2
			26-45	25.1	18.8	12.6	22.9	17.2	11.4	13.9	10.5	7.0
			46-60	27.3	20.4	13.6	25.1	18.9	12.6	16.6	12.5	8.3
Medium	Medium	Light	0-25	21.3	16.0	10.6	18.8	14.1	9.4	8.7	6.5	4.4
			26-45	21.6	16.2	10.8	19.2	14.4	9.6	9.3	7.0	4.6
			46-60	22.4	16.8	11.2	20.0	15.0	10.0	10.3	7.7	5.1
Heavy	Medium	Light	0-25	26.7	20.0	13.4	23.5	17.6	11.7	9.3	7.0	4.7
			26-45	27.1	20.3	13.5	23.9	17.9	12.0	9.9	7.4	5.0
			46-60	27.8	20.9	13.9	24.7	18.5	12.3	11.0	8.3	5.5
Heavy	Heavy	Heavy	0-25	36.0	27.0	18.0	32.4	24.3	16.2	16.3	12.2	8.7
			26-45	37.1	27.8	18.6	33.6	25.2	16.8	17.8	13.4	8.9
			46-60	39.3	29.4	19.6	35.9	26.9	18.0	20.7	15.5	10.3
Heavy	Heavy	Light	0-25	33.3	24.9	16.6	29.5	22.1	14.8	12.4	9.3	6.2
			26-45	33.6	25.2	16.8	29.9	22.4	15.0	12.9	9.7	6.5
			46-60	34.4	25.8	17.2	30.7	23.0	15.3	14.0	10.5	7.0

Copyright Standards New Zealand

© The Crown in right of New Zealand, administered by the New Zealand Standards Executive. Access to this standard has been sponsored by the Ministry of Business, Innovation, and Employment under copyright license LN001498. You are not permitted to reproduce or distribute any part of this standard without prior written permission from Standards New Zealand, on behalf of New Zealand Standards Executive, unless your actions are covered by Part 3 of the Copyright Act 1994.

Amd 1 Dec '00

Table 14.3 – Bracing demand for various combinations of claddings for single storey and 2 storey buildings on concrete slab-on-ground, 3 kPa floor loads (see 5.3.1)

Lower storey cladding	Single or top storey cladding	Roof cladding	Roof pitch degrees	Two storey buildings						Single storey		
				Lower storey			Top storey walls			Single storey walls		
				Earthquake zones								
				A	B	C	A	B	C	A	B	C
				Bracing demand in BUs/m^2 of floor area								
Light	Light	Light	0-25	10.9	8.2	5.4	5.8	4.3	2.9	3.6	2.7	1.8
			26-45	11.3	8.5	5.6	6.2	4.7	3.1	4.0	3.0	2.0
			46-60	12.0	9.0	6.0	7.1	5.3	3.5	4.7	3.6	2.4
Medium	Light	Light	0-25	12.2	9.1	6.1	6.0	4.5	3.0	3.6	2.7	1.8
			26-45	12.5	9.4	6.3	6.4	4.8	3.2	4.0	3.0	2.0
			46-60	13.3	9.9	6.6	7.3	5.5	3.7	4.7	3.6	2.4
Heavy	Light	Light	0-25	14.5	10.8	7.2	6.3	4.7	3.2	3.6	2.7	1.8
			26-45	14.8	11.1	7.4	6.8	5.1	3.4	4.0	3.0	2.0
			46-60	15.6	11.7	7.8	7.7	5.8	3.9	4.7	3.6	2.4
Light	Light	Heavy	0-25	13.6	10.2	6.8	8.9	6.7	4.4	6.3	4.8	3.2
			26-45	14.7	11.0	7.4	10.1	7.6	5.1	7.5	5.6	3.7
			46-60	16.9	12.7	8.4	12.5	9.3	6.2	9.6	7.2	4.8
Medium	Light	Heavy	0-25	14.9	11.1	7.4	9.2	6.9	4.6	6.3	4.8	3.2
			26-45	16.0	12.0	8.0	10.5	7.9	5.2	7.5	5.6	3.7
			46-60	18.2	13.6	9.1	12.8	9.3	6.4	9.6	7.2	4.8
Heavy	Light	Heavy	0-25	17.2	12.9	8.6	9.7	7.3	4.8	6.3	4.8	3.2
			26-45	18.3	13.7	9.2	11.0	8.6	5.5	7.5	5.6	3.7
			46-60	20.5	15.3	10.2	13.4	10.1	6.7	9.6	7.2	4.8
Medium and Heavy	Medium	Heavy	0-25	16.6	12.4	8.3	10.1	7.6	5.0	6.9	5.2	3.5
			26-45	17.7	13.3	8.9	11.4	8.5	5.7	8.1	6.0	4.0
			46-60	19.9	14.9	9.9	13.8	10.3	6.9	10.2	7.7	5.1
Medium	Medium	Light	0-25	13.9	10.4	6.9	6.9	5.2	3.4	4.2	3.2	2.1
			26-45	14.2	10.7	7.1	7.3	5.5	3.7	4.6	3.4	2.3
			46-60	15.0	11.2	7.2	8.2	6.2	4.1	5.3	4.0	2.7
Heavy	Medium	Light	0-25	16.2	12.1	8.1	7.2	5.4	3.6	4.2	3.2	2.1
			26-45	16.5	12.4	8.3	7.7	5.8	3.9	4.6	3.4	2.3
			46-60	17.3	12.9	8.6	8.6	6.5	4.3	5.3	4.0	2.7
Heavy	Heavy	Heavy	0-25	21.9	16.4	11.0	12.2	9.1	6.1	7.9	5.9	4.0
			26-45	23.1	17.3	11.5	13.5	10.1	6.8	9.1	6.8	4.5
			46-60	25.2	18.9	12.6	16.0	12.0	8.0	11.2	8.4	5.6
Heavy	Heavy	Light	0-25	19.2	14.4	9.6	8.9	6.6	4.4	5.2	3.9	2.6
			26-45	19.6	14.7	9.8	9.3	7.0	4.7	5.6	4.2	2.8
			46-60	20.3	15.2	10.2	10.2	7.7	5.1	6.3	4.7	3.2

Copyright Standards New Zealand

© The Crown in right of New Zealand, administered by the New Zealand Standards Executive. Access to this standard has been sponsored by the Ministry of Business, Innovation, and Employment under copyright license LN001498. You are not permitted to reproduce or distribute any part of this standard without prior written permission from Standards New Zealand, on behalf of New Zealand Standards Executive, unless your actions are covered by Part 3 of the Copyright Act 1994.

Table 14.4 – Bearers, 3 kPa floor load (see 6.12.2.1) **– No. 1 Framing and MSG 6**

Maximum span of bearer continuous over 2 or more spans (m)	Loaded dimension* of bearer (m)	Bearer size (width x thickness) (mm x mm)
1.30	1.3	140 x 70
	1.7	140 x 90
	2.4	190 x 70
1.65	1.5	190 x 70

* For definition of loaded dimension see 1.3.

NOTE – Members 70 mm and 90 mm thick may be substituted with built-up members sized and nailed in accordance with 2.4.4.7.

Table 14.4 – Bearers, 3 kPa floor load (see 6.12.2.1) **– VSG 8 and MSG 8**

Maximum span of bearer continuous over 2 or more spans (m)	Loaded dimension* of bearer (m)	Bearer size (width x thickness) (mm x mm)
1.30	1.8	140 x 70
	2.3	140 x 90
	3.4	190 x 70
1.65	1.4	140 x 90
	2.1	190 x 70
2.00	1.4	190 x 70

* For definition of loaded dimension see 1.3.

Amd 2 May '06

NOTE – Members 70 mm and 90 mm thick may be substituted with built-up members sized and nailed in accordance with 2.4.4.7.

Copyright Standards New Zealand

© The Crown in right of New Zealand, administered by the New Zealand Standards Executive. Access to this standard has been sponsored by the Ministry of Business, Innovation, and Employment under copyright license LN001498. You are not permitted to reproduce or distribute any part of this standard without prior written permission from Standards New Zealand, on behalf of New Zealand Standards Executive, unless your actions are covered by Part 3 of the Copyright Act 1994.

Table 14.4 – Bearers, 3 kPa floor load (see 6.12.2.1) **– VSG 10 and MSG 10**

Maximum span of bearer continuous over 2 or more spans (m)	Loaded dimension* of bearer (m)	Bearer size (width x thickness) (mm x mm)
1.30	1.4	90 x 90
	2.6	140 x 70
	3.4	140 x 90
	4.8	190 x 70
1.65	1.6	140 x 70
	2.1	140 x 90
	3.0	190 x 70
2.00	1.4	140 x 90
	2.0	190 x 70

* For definition of loaded dimension see 1.3.

NOTE – Members 70 mm and 90 mm thick may be substituted with built-up members sized and nailed in accordance with 2.4.4.7.

Amd 2 May '06

Table 14.5 – Subfloor jack studs, 3 kPa floor load (see 6.10.2.1)

Maximum span of bearers (m)	Jack stud (mm x mm)	Maximum jack stud height for loaded dimension of the bearer of: (m)		
		2.0 (m)	3.5 (m)	5.0 (m)
Supporting 1 storey				
1.30	90 x 70	2.4	1.2	–
	90 x 90	3.0	2.4	2.4
1.65	90 x 70	1.8	–	–
	90 x 90	3.0	2.4	1.8
2.00	90 x 70	1.8	–	–
	90 x 90	3.0	2.4	1.8
Supporting 2 storeys				
1.30	90 x 70	1.2	–	–
	90 x 90	2.4	1.8	–
1.65	90 x 90	2.4	–	–
2.00	90 x 90	1.8	–	–

* For definition of loaded dimension see 1.3.

NOTE – Substitution with built-up members is not allowed.

Amd 2 May '06

Copyright Standards New Zealand

© The Crown in right of New Zealand, administered by the New Zealand Standards Executive. Access to this standard has been sponsored by the Ministry of Business, Innovation, and Employment under copyright license LN001498. You are not permitted to reproduce or distribute any part of this standard without prior written permission from Standards New Zealand, on behalf of New Zealand Standards Executive, unless your actions are covered by Part 3 of the Copyright Act 1994.

Table 14.6 – Square pile footings for 3 kPa floor load (see 6.4.5.4)

Amd 1 Dec '00

Maximum spans* of:		Minimum plan dimensions of square footing for pile supporting:		
Bearers	Joists	Floor only	Floor and walls of:	
			1 storey	2 storeys
(m)	(m)	(mm x mm)	(mm x mm)	(mm x mm)
1.30	2.0	225 x 225†	300 x 300†	375 x 375
	3.5	300 x 300†	400 x 400	500 x 500
	5.0	325 x 325†	450 x 450	575 x 575
	6.0	350 x 350	500 x 500	625 x 625
1.65	2.0	250 x 250†	350 x 350	425 x 425
	3.5	325 x 325†	425 x 425	575 x 575
	5.0	375 x 375	500 x 500	650 x 650
2.0	2.0	275 x 275†	375 x 375	475 x 475
	3.5	375 x 375	475 x 475	625 x 625

* Span is the average of the bearer or joist spans on either side of the pile under consideration.

† 350 mm x 350 mm for anchor piles.

Table 14.7 – Spacing of M12 bolts supporting stringers for 3 kPa floor load (see 6.13.1)

Amd 2 May '06

Maximum span of floor joists	Maximum spacing of bolts	Stringer nominal size
(m)	(m)	(mm)
2	1.25	140 x 45
3	0.9	140 x 45
4	0.7	140 x 45
5	0.5	140 x 45
6	0.5	140 x 45

Copyright Standards New Zealand

© The Crown in right of New Zealand, administered by the New Zealand Standards Executive. Access to this standard has been sponsored by the Ministry of Business, Innovation, and Employment under copyright license LN001498. You are not permitted to reproduce or distribute any part of this standard without prior written permission from Standards New Zealand, on behalf of New Zealand Standards Executive, unless your actions are covered by Part 3 of the Copyright Act 1994.

Table 14.8 – Floor joists for 3 kPa floor load (see 7.1.1.1) **– No. 1 Framing and MSG 6**

Floor joist size	Maximum span* of joists at a maximum spacing (mm) of:		
	400	450	600
(mm x mm)	(m)	(m)	(m)
90 x 35	1.05	1.00	0.85
90 x 45	1.20	1.10	0.95
140 x 35	1.65	1.55	1.35
140 x 45	1.85	1.75	1.50
190 x 45	2.55	2.40	2.05
240 x 45	3.20	3.05	2.60
290 x 45	3.90	3.65	3.15

* May be increased by 10 % for joists continuous over 2 or more spans.

Table 14.8 – Floor joists for 3 kPa floor load (see 7.1.1.1) **– VSG 8 and MSG 8**

Floor joist size	Maximum span* of joists at a maximum spacing (mm) of:		
	400	450	600
(mm x mm)	(m)	(m)	(m)
90 x 35	1.25	1.15	1.00
90 x 45	1.40	1.35	1.15
140 x 35	1.95	1.85	1.60
140 x 45	2.20	2.10	1.80
190 x 45	3.00	2.85	2.45
240 x 45	3.80	3.60	3.10
290 x 45	4.60	4.35	3.75

* May be increased by 10 % for joists continuous over 2 or more spans.

Amd 2
May '06

Copyright Standards New Zealand

© The Crown in right of New Zealand, administered by the New Zealand Standards Executive. Access to this standard has been sponsored by the Ministry of Business, Innovation, and Employment under copyright license LN001498. You are not permitted to reproduce or distribute any part of this standard without prior written permission from Standards New Zealand, on behalf of New Zealand Standards Executive, unless your actions are covered by Part 3 of the Copyright Act 1994.

Table 14.8 – Floor joists for 3 kPa floor load (see 7.1.1.1) **– VSG 10 and MSG 10**

Amd 2 May '06

Floor joist size	Maximum span* of joists at a maximum spacing (mm) of:		
	400	450	600
(mm x mm)	(m)	(m)	(m)
90 x 35	1.45	1.40	1.20
90 x 45	1.55	1.50	1.35
140 x 35	2.25	2.15	1.90
140 x 45	2.65	2.50	2.15
190 x 45	3.60	3.40	2.95
240 x 45	4.55	4.30	3.70
290 x 45	5.50	5.20	4.50

* May be increased by 10 % for joists continuous over 2 or more spans.

Table 14.9 – Strip flooring for 3 kPa floor load (see 7.2.2.1)

Maximum spacing of joists	Minimum dry dressed thickness of tongued and grooved strip flooring of species listed below as:	
	Type A	Type B
(mm)	(mm)	(mm)
400	22	19
450	22	22
600	25	25

Type A timbers: Radiata pine, matai, rimu, red beech, silver beech, douglas fir, larch.

Type B timbers: Tawa, hard beech, jarrah, karri, blackbutt, tallowwood.

Copyright Standards New Zealand

© The Crown in right of New Zealand, administered by the New Zealand Standards Executive. Access to this standard has been sponsored by the Ministry of Business, Innovation, and Employment under copyright license LN001498. You are not permitted to reproduce or distribute any part of this standard without prior written permission from Standards New Zealand, on behalf of New Zealand Standards Executive, unless your actions are covered by Part 3 of the Copyright Act 1994.

Table 14.10 – Studs in loadbearing walls for heavy or light roofs with medium wall claddings or light wall claddings for 3 kPa floor load (see 8.5.1.1) **– No. 1 Framing and MSG 6**

Wind zone	Loaded dimension* of wall	Stud sizes for studs of maximum length (height) of: (m)								
		2.4			2.7			3.0		
		At a maximum stud spacing (mm) of:			At a maximum stud spacing (mm) of:			At a maximum stud spacing (mm) of:		
		400	480	600	400	480	600	400	480	600
A Lower of 2 storeys or subfloor beneath 1 storey										
	(m)	(mm x mm)	(mm x mm)	(mm x mm)	(mm x mm)	(mm x mm)	(mm x mm)	(mm x mm)	(mm x mm)	(mm x mm)
		(Width x thickness)								
Very High	3.0	90 x 70	90 x 70	90 x 90	90 x 70	90 x 90	140 x 45	90 x 90	140 x 45	140 x 70
	4.5	90 x 70	90 x 70	90 x 90	90 x 70	90 x 90	140 x 45	90 x 90	140 x 45	140 x 70
	6.0	90 x 70	90 x 70	90 x 90	90 x 70	90 x 90	140 x 45	90 x 90	140 x 45	140 x 70
High	3.0	90 x 45	90 x 70	90 x 70	90 x 70	90 x 70	90 x 90	90 x 70	90 x 90	140 x 45
	4.5	90 x 45	90 x 70	90 x 70	90 x 70	90 x 70	90 x 90	90 x 70	90 x 90	140 x 45
	6.0	90 x 45	90 x 70	90 x 70	90 x 70	90 x 70	90 x 90	90 x 70	90 x 90	140 x 45
Medium	3.0	90 x 35	90 x 45	90 x 70	90 x 45	90 x 70	90 x 70	90 x 70	90 x 70	90 x 90
	4.5	90 x 35	90 x 45	90 x 70	90 x 45	90 x 70	90 x 70	90 x 70	90 x 70	90 x 90
	6.0	90 x 35	90 x 45	90 x 70	90 x 45	90 x 70	90 x 70	90 x 70	90 x 70	90 x 90
Low	3.0	90 x 35	90 x 35	90 x 45	90 x 35	90 x 45	90 x 70	90 x 45	90 x 70	90 x 70
	4.5	90 x 35	90 x 35	90 x 45	90 x 35	90 x 45	90 x 70	90 x 45	90 x 70	90 x 70
	6.0	90 x 35	90 x 35	90 x 45	90 x 45	90 x 45	90 x 70	90 x 45	90 x 70	90 x 70
Internal Walls	3.0	90 x 35	90 x 35	90 x 45	90 x 35	90 x 45	90 x 70	90 x 45	90 x 70	90 x 70
	4.5	90 x 35	90 x 35	90 x 45	90 x 35	90 x 45	90 x 70	90 x 45	90 x 70	90 x 70
	6.0	90 x 35	90 x 35	90 x 45	90 x 45	90 x 45	90 x 70	90 x 45	90 x 70	90 x 70
B Subfloor beneath 2 storeys										
	(m)	(mm x mm)	(mm x mm)	(mm x mm)	(mm x mm)	(mm x mm)	(mm x mm)	(mm x mm)	(mm x mm)	(mm x mm)
		(Width x thickness)								
Very High	3.0	90 x 70	90 x 70	90 x 90	90 x 90	90 x 90	140 x 45	90 x 90	140 x 45	140 x 70
	4.5	90 x 70	90 x 70	90 x 90	90 x 90	90 x 90	140 x 45	90 x 90	140 x 45	140 x 70
	6.0	90 x 70	90 x 70	90 x 90	90 x 90	90 x 90	140 x 70	140 x 45	140 x 45	140 x 70
High	3.0	90 x 70	90 x 70	90 x 90	90 x 70	90 x 90	90 x 90	90 x 90	90 x 90	140 x 45
	4.5	90 x 70	90 x 70	90 x 90	90 x 70	90 x 90	140 x 45	90 x 90	90 x 90	140 x 45
	6.0	90 x 70	90 x 70	90 x 90	90 x 70	90 x 90	140 x 45	90 x 90	140 x 45	140 x 45
Medium	3.0	90 x 45	90 x 45	90 x 70	90 x 70	90 x 70	90 x 70	90 x 70	90 x 70	90 x 90
	4.5	90 x 45	90 x 70	90 x 70	90 x 70	90 x 70	90 x 90	90 x 70	90 x 90	90 x 90
	6.0	90 x 45	90 x 70	90 x 70	90 x 70	90 x 70	90 x 90	90 x 70	90 x 90	140 x 45
Low	3.0	90 x 35	90 x 45	90 x 70	90 x 45	90 x 70	90 x 70	90 x 45	90 x 70	90 x 90
	4.5	90 x 35	90 x 45	90 x 70	90 x 45	90 x 70	90 x 70	90 x 70	90 x 70	90 x 90
	6.0	90 x 35	90 x 45	90 x 70	90 x 45	90 x 70	90 x 70	90 x 70	90 x 70	90 x 90
Internal Walls	3.0	90 x 35	90 x 45	90 x 70	90 x 45	90 x 70	90 x 70	90 x 70	90 x 70	90 x 90
	4.5	90 x 35	90 x 45	90 x 70	90 x 45	90 x 70	90 x 70	90 x 70	90 x 70	90 x 90
	6.0	90 x 35	90 x 45	90 x 70	90 x 45	90 x 70	90 x 70	90 x 70	90 x 70	90 x 90

* For definition of loaded dimension see 1.3.

NOTE –

(1) Determine the loaded dimension of the wall (lower or subfloor as appropriate) at floor level and the loaded dimension of the walls above at floor and roof levels and use the greatest value in this table.

(2) Studs 70 mm and 90 mm thick may be replaced with studs of 35 mm and 45 mm thickness respectively, provided they are placed at no more than one half the spacing required for the 70 mm and 90 mm stud they are replacing.

(3) Studs 70 mm and 90 mm thick may be substituted with built-up (or laminated) members sized in accordance with 8.5.1.2 and nailed together in accordance with 2.4.4.7.

Amd 2
May '06

© The Crown in right of New Zealand, administered by the New Zealand Standards Executive. Access to this standard has been sponsored by the Ministry of Business, Innovation, and Employment under copyright license LN001498. You are not permitted to reproduce or distribute any part of this standard without prior written permission from Standards New Zealand, on behalf of New Zealand Standards Executive, unless your actions are covered by Part 3 of the Copyright Act 1994.

Table 14.10 – Studs in loadbearing walls for heavy or light roofs with medium wall claddings or light wall claddings for 3 kPa floor load (see 8.5.1.1) **– VSG 8 and MSG 8**

Wind zone	Loaded dimension* of wall	Stud sizes for studs of maximum length (height) of: (m)								
		2.4			2.7			3.0		
		At a maximum stud spacing (mm) of:			At a maximum stud spacing (mm) of:			At a maximum stud spacing (mm) of:		
		400	480	600	400	480	600	400	480	600
A Lower of 2 storeys or subfloor beneath 1 storey										
	(m)	(mm x mm)	(mm x mm)	(mm x mm)	(mm x mm)	(mm x mm)	(mm x mm)	(mm x mm)	(mm x mm)	(mm x mm)
		(Width x thickness)								
Very High	3.0	90 x 45	90 x 70	90 x 70	90 x 70	90 x 70	90 x 90	90 x 70	90 x 90	90 x 90
	4.5	90 x 45	90 x 70	90 x 70	90 x 70	90 x 70	90 x 90	90 x 70	90 x 90	140 X 45
	6.0	90 x 45	90 x 70	90 x 70	90 x 70	90 x 70	90 x 90	90 x 70	90 x 90	140 x 45
High	3.0	90 x 35	90 x 45	90 x 70	90 x 45	90 x 70	90 x 70	90 x 70	90 x 70	90 x 90
	4.5	90 x 35	90 x 45	90 x 70	90 x 45	90 x 70	90 x 70	90 x 70	90 x 70	90 x 90
	6.0	90 x 35	90 x 45	90 x 70	90 x 45	90 x 70	90 x 70	90 x 70	90 x 70	90 x 90
Medium	3.0	70 x 45	90 x 35	90 x 45	90 x 35	90 x 45	90 x 70	90 x 45	90 x 45	90 x 70
	4.5	70 x 45	90 x 35	90 x 45	90 x 35	90 x 45	90 x 70	90 x 45	90 x 70	90 x 70
	6.0	90 x 35	90 x 35	90 x 45	90 x 35	90 x 45	90 x 70	90 x 45	90 x 70	90 x 70
Low	3.0	70 x 35	70 x 45	90 x 35	70 x 45	90 x 35	90 x 45	90 x 35	90 x 45	90 x 70
	4.5	70 x 45	70 x 45	90 x 35	90 x 35	90 x 35	90 x 45	90 x 35	90 x 45	90 x 70
	6.0	70 x 45	90 x 35	90 x 35	90 x 35	90 x 35	90 x 45	90 x 35	90 x 45	90 x 70
Internal Walls	3.0	70 x 35	70 x 45	90 x 35	70 x 45	90 x 35	90 x 45	90 x 35	90 x 45	90 x 70
	4.5	70 x 45	70 x 45	90 x 35	90 x 35	90 x 35	90 x 45	90 x 35	90 x 45	90 x 70
	6.0	70 x 45	90 x 35	90 x 35	90 x 35	90 x 35	90 x 45	90 x 35	90 x 45	90 x 70
B Subfloor beneath 2 storeys										
	(m)	(mm x mm)	(mm x mm)	(mm x mm)	(mm x mm)	(mm x mm)	(mm x mm)	(mm x mm)	(mm x mm)	(mm x mm)
		(Width x thickness)								
Very High	3.0	90 x 45	90 x 70	90 x 70	90 x 70	90 x 70	90 x 90	90 x 70	90 x 90	140 x 45
	4.5	90 x 45	90 x 70	90 x 70	90 x 70	90 x 70	90 x 90	90 x 70	90 x 90	140 x 45
	6.0	90 x 45	90 x 70	90 x 70	90 x 70	90 x 70	90 x 90	90 x 70	90 x 90	140 x 45
High	3.0	90 x 45	90 x 45	90 x 70	90 x 45	90 x 70	90 x 70	90 x 70	90 x 70	90 x 90
	4.5	90 x 45	90 x 45	90 x 70	90 x 70	90 x 70	90 x 70	90 x 70	90 x 70	90 x 90
	6.0	90 x 45	90 x 45	90 x 70	90 x 70	90 x 70	90 x 70	90 x 70	90 x 70	90 x 90
Medium	3.0	90 x 35	90 x 35	90 x 45	90 x 35	90 x 45	90 x 70	90 x 45	90 x 70	90 x 70
	4.5	90 x 35	90 x 35	90 x 45	90 x 45	90 x 45	90 x 70	90 x 45	90 x 70	90 x 70
	6.0	90 x 35	90 x 45	90 x 45	90 x 45	90 x 45	90 x 70	90 x 70	90 x 70	90 x 70
Low	3.0	70 x 45	90 x 35	90 x 45	90 x 35	90 x 45	90 x 45	90 x 45	90 x 45	90 x 70
	4.5	70 x 45	90 x 35	90 x 45	90 x 35	90 x 45	90 x 70	90 x 45	90 x 45	90 x 70
	6.0	90 x 35	90 x 35	90 x 45	90 x 35	90 x 45	90 x 70	90 x 45	90 x 70	90 x 70
Internal Walls	3.0	70 x 45	90 x 35	90 x 45	90 x 35	90 x 45	90 x 45	90 x 45	90 x 45	90 x 70
	4.5	70 x 45	90 x 35	90 x 45	90 x 35	90 x 45	90 x 70	90 x 45	90 x 45	90 x 70
	6.0	90 x 35	90 x 35	90 x 45	90 x 35	90 x 45	90 x 70	90 x 45	90 x 70	90 x 70

* For definition of loaded dimension see 1.3.

NOTE –

(1) Determine the loaded dimension of the wall (lower or subfloor as appropriate) at floor level and the loaded dimension of the walls above at floor and roof levels and use the greatest value in this table.

(2) Studs 70 mm and 90 mm thick may be replaced with studs of 35 mm and 45 mm thickness respectively, provided they are placed at no more than one half the spacing required for the 70 mm and 90 mm stud they are replacing.

(3) Studs 70 mm and 90 mm thick may be substituted with built-up (or laminated) members sized in accordance with 8.5.1.2 and nailed together in accordance with 2.4.4.7.

Amd 2
May '06

Copyright Standards New Zealand

© The Crown in right of New Zealand, administered by the New Zealand Standards Executive. Access to this standard has been sponsored by the Ministry of Business, Innovation, and Employment under copyright license LN001498. You are not permitted to reproduce or distribute any part of this standard without prior written permission from Standards New Zealand, on behalf of New Zealand Standards Executive, unless your actions are covered by Part 3 of the Copyright Act 1994.

Table 14.10 – Studs in loadbearing walls for heavy or light roofs with medium wall claddings or light wall claddings for 3 kPa floor load (see 8.5.1.1) **– VSG 10 and MSG 10**

Wind zone	Loaded dimension* of wall	Stud sizes for studs of maximum length (height) of: (m)								
		2.4			2.7			3.0		
		At a maximum stud spacing (mm) of:			At a maximum stud spacing (mm) of:			At a maximum stud spacing (mm) of:		
		400	480	600	400	480	600	400	480	600
A Lower of 2 storeys or subfloor beneath 1 storey										
	(m)	(mm x mm)	(mm x mm)	(mm x mm)	(mm x mm)	(mm x mm)	(mm x mm)	(mm x mm)	(mm x mm)	(mm x mm)
		(Width x thickness)								
Very High	3.0	90 x 35	90 x 35	90 x 45	90 x 45	90 x 45	90 x 70	90 x 45	90 x 70	90 x 70
	4.5	90 x 35	90 x 35	90 x 45	90 x 45	90 x 45	90 x 70	90 x 45	90 x 70	90 x 70
	6.0	90 x 35	90 x 45	90 x 45	90 x 45	90 x 70	90 x 70	90 x 70	90 x 70	90 x 70
High	3.0	70 x 45	90 x 35	90 x 35	90 x 35	90 x 35	90 x 45	90 x 45	90 x 45	90 x 70
	4.5	70 x 45	90 x 35	90 x 45	90 x 35	90 x 45	90 x 70	90 x 45	90 x 45	90 x 70
	6.0	70 x 45	90 x 35	90 x 45	90 x 35	90 x 45	90 x 70	90 x 45	90 x 70	90 x 70
Medium	3.0	70 x 35	70 x 45	90 x 35	70 x 45	90 x 35	90 x 35	90 x 35	90 x 35	90 x 45
	4.5	70 x 35	70 x 45	90 x 35	70 x 45	90 x 35	90 x 45	90 x 35	90 x 45	90 x 45
	6.0	70 x 45	70 x 45	90 x 35	90 x 35	90 x 35	90 x 45	90 x 35	90 x 45	90 x 70
Low	3.0	70 x 45	70 x 35	70 x 45	70 x 35	70 x 45	90 x 35	70 x 45	90 x 35	90 x 35
	4.5	70 x 35	70 x 35	70 x 45	70 x 45	70 x 45	90 x 35	70 x 45	90 x 35	90 x 45
	6.0	70 x 35	70 x 45	90 x 35	70 x 45	90 x 35	90 x 35	90 x 35	90 x 35	90 x 45
Internal Walls	3.0	70 x 35	70 x 35	70 x 45	70 x 35	70 x 45	90 x 35	70 x 45	90 x 35	90 x 35
	4.5	70 x 35	70 x 35	70 x 45	70 x 45	70 x 45	90 x 35	70 x 45	90 x 35	90 x 45
	6.0	70 x 35	70 x 45	90 X 35	70 x 45	90 x 35	90 x 35	90 x 35	90 x 35	90 x 45
B Subfloor beneath 2 storeys										
	(m)	(mm x mm)	(mm x mm)	(mm x mm)	(mm x mm)	(mm x mm)	(mm x mm)	(mm x mm)	(mm x mm)	(mm x mm)
		(Width x thickness)								
Very High	3.0	90 x 35	90 x 45	90 x 70	90 x 45	90 x 70	90 x 70	90 x 70	90 x 70	90 x 90
	4.5	90 x 35	90 x 45	90 x 70	90 x 45	90 x 70	90 x 70	90 x 70	90 x 70	90 x 90
	6.0	90 x 35	90 x 45	90 x 70	90 x 45	90 x 70	90 x 70	90 x 70	90 x 70	90 x 90
High	3.0	90 x 35	90 x 35	90 x 45	90 x 35	90 x 45	90 x 70	90 x 45	90 x 70	90 x 70
	4.5	90 x 35	90 x 35	90 x 45	90 x 35	90 x 45	90 x 70	90 x 45	90 x 70	90 x 70
	6.0	90 x 35	90 x 35	90 x 45	90 x 45	90 x 45	90 x 70	90 x 45	90 x 70	90 x 70
Medium	3.0	70 x 45	90 x 35	90 x 35	90 x 35	90 x 35	90 x 45	90 x 35	90 x 45	90 x 70
	4.5	70 x 45	90 x 35	90 x 35	90 x 35	90 x 35	90 x 45	90 x 35	90 x 45	90 x 70
	6.0	70 x 45	90 x 35	90 x 45	90 x 35	90 x 45	90 x 45	90 x 45	90 x 45	90 x 70
Low	3.0	70 x 35	70 x 45	90 x 35	70 x 45	90 x 35	90 x 35	90 x 35	90 x 35	90 x 45
	4.5	70 x 45	70 x 45	90 x 35	90 x 35	90 x 35	90 x 45	90 x 35	90 x 45	90 x 45
	6.0	70 x 45	90 x 35	90 x 35	90 x 35	90 x 35	90 x 45	90 x 35	90 x 45	90 x 70
Internal Walls	3.0	70 x 35	70 x 45	90 x 35	70 x 45	90 x 35	90 x 35	90 x 35	90 x 35	90 x 45
	4.5	70 x 45	70 x 45	90 x 35	90 x 35	90 x 35	90 x 45	90 x 35	90 x 45	90 x 45
	6.0	70 x 45	70 x 45	90 x 35	90 x 35	90 x 35	90 x 45	90 x 35	90 x 45	90 x 70

* For definition of loaded dimension see 1.3.

NOTE –

(1) Determine the loaded dimension of the wall (lower or subfloor as appropriate) at floor level and the loaded dimension of the walls above at floor and roof levels and use the greatest value in this table.

(2) Studs 70 mm and 90 mm thick may be replaced with studs of 35 mm and 45 mm thickness respectively, provided they are placed at no more than one half the spacing required for the 70 mm and 90 mm stud they are replacing.

(3) Studs 70 mm and 90 mm thick may be substituted with built-up (or laminated) members sized in accordance with 8.5.1.2 and nailed together in accordance with 2.4.4.7.

Amd 2
May '06

© The Crown in right of New Zealand, administered by the New Zealand Standards Executive. Access to this standard has been sponsored by the Ministry of Business, Innovation, and Employment under copyright license LN001498. You are not permitted to reproduce or distribute any part of this standard without prior written permission from Standards New Zealand, on behalf of New Zealand Standards Executive, unless your actions are covered by Part 3 of the Copyright Act 1994.

Table 14.11 – Reference table for lintel load cases

Table No.	Supporting			Load type			
	Roof	Walls	Floor	Roof	Snow	Walls	Floor
					(kPa)		(kPa)
14.12	✓	✓	✓	Light	0	Light	3
	✓	✓	✓	Light	0	Medium	3
	✓	✓	✓	Heavy	0	Light	3
	✓	✓	✓	Heavy	0	Medium	3
14.13		✓	✓			Light	3
		✓	✓			Medium	3
Amd 1 Dec '00 14.14			✓				3

Table 14.12 – Lintels supporting roof, wall and floor for 3 kPa floor load (see figure 8.9) – No. 1 Framing and MSG 6

Roof pitch up to 45°

Loaded dimension* of lintel (m)		Maximum span for lintel sizes listed below (m) (Width x thickness)							
		140 x 70	140 x 90	190 x 70	190 x 90	240 x 70	240 x 90	290 x 70	290 x 90
Light roof Light wall	3	0.7	0.8	1.0	1.2	1.2	1.5	1.5	1.8
	4	0.7	0.8	0.9	1.1	1.2	1.4	1.4	1.7
	5	–	0.8	0.9	1.1	1.1	1.4	1.4	1.7
	6	–	0.8	0.9	1.1	1.1	1.4	1.4	1.6
Light roof Medium wall	3	0.7	0.8	0.9	1.1	1.2	1.4	1.4	1.7
	4	–	0.8	0.9	1.1	1.1	1.4	1.4	1.7
	5	–	0.7	0.8	1.0	1.0	1.3	1.3	1.5
	6	–	0.7	0.8	1.0	1.0	1.2	1.2	1.5
Heavy roof Light wall	3	0.7	0.8	0.9	1.1	1.1	1.4	1.4	1.7
	4	–	0.8	0.9	1.1	1.1	1.3	1.3	1.6
	5	–	0.7	0.8	1.0	1.1	1.3	1.3	1.6
	6	–	0.7	0.8	1.0	1.0	1.2	1.2	1.5
Heavy roof Medium wall	3	–	0.8	0.9	1.1	1.1	1.4	1.4	1.7
	4	–	0.7	0.8	1.0	1.1	1.3	1.3	1.6
	5	–	0.7	0.8	1.0	1.0	1.3	1.3	1.5
	6	–	0.7	0.8	1.0	1.0	1.2	1.2	1.5

* For definition of loaded dimension see 1.3.

NOTE –

(1) Determine the loaded dimension of the lintel at floor level and the loaded dimension of the wall above the lintel at roof level and use the greater value in this table.

(2) Members 70 mm and 90 mm thick may be substituted with built-up members sized and nailed in accordance with 2.4.4.7.

Amd 2 May '06

Copyright Standards New Zealand

© The Crown in right of New Zealand, administered by the New Zealand Standards Executive. Access to this standard has been sponsored by the Ministry of Business, Innovation, and Employment under copyright license LN001498. You are not permitted to reproduce or distribute any part of this standard without prior written permission from Standards New Zealand, on behalf of New Zealand Standards Executive, unless your actions are covered by Part 3 of the Copyright Act 1994.

Table 14.12 – Lintels supporting roof, wall and floor for 3 kPa floor load (see figure 8.9) **– VSG 8 and MSG 8**

Roof pitch up to 45°

Loaded dimension* of lintel (m)		Maximum span for lintel sizes listed below (m) (Width x thickness)							
		140 x 70	140 x 90	190 x 70	190 x 90	240 x 70	240 x 90	290 x 70	290 x 90
Light roof Light wall	3	0.8	1.0	1.1	1.4	1.4	1.8	1.8	2.1
	4	0.8	1.0	1.1	1.3	1.4	1.7	1.7	2.1
	5	0.8	0.9	1.1	1.3	1.4	1.7	1.7	2.0
	6	0.8	0.9	1.0	1.3	1.3	1.6	1.6	2.0
Light roof Medium wall	3	0.8	1.0	1.1	1.3	1.4	1.7	1.7	2.1
	4	0.8	1.0	1.1	1.3	1.4	1.7	1.7	2.0
	5	0.7	0.9	1.0	1.2	1.2	1.5	1.5	1.8
	6	0.7	0.8	0.9	1.1	1.2	1.5	1.5	1.8
Heavy roof Light wall	3	0.8	1.0	1.1	1.3	1.4	1.7	1.7	2.0
	4	0.7	0.9	1.0	1.3	1.3	1.6	1.6	1.9
	5	0.7	0.9	1.0	1.2	1.3	1.5	1.5	1.9
	6	0.7	0.8	1.0	1.2	1.2	1.5	1.5	1.8
Heavy roof Medium wall	3	0.8	0.9	1.0	1.3	1.3	1.6	1.6	2.0
	4	0.7	0.9	1.0	1.2	1.3	1.6	1.6	1.9
	5	0.7	0.9	1.0	1.2	1.2	1.5	1.5	1.8
	6	0.7	0.8	0.9	1.1	1.2	1.5	1.5	1.8

* For definition of loaded dimension see 1.3.

NOTE –

(1) Determine the loaded dimension of the lintel at floor level and the loaded dimension of the wall above the lintel at roof level and use the greater value in this table.

(2) Members 70 mm and 90 mm thick may be substituted with built-up members sized and nailed in accordance with 2.4.4.7.

Table 14.12 – Lintels supporting roof, wall and floor for 3 kPa floor load (see figure 8.9) **– VSG 10 and MSG 10**

Roof pitch up to 45°

Loaded dimension* of lintel (m)		Maximum span for lintel sizes listed below (m) (Width x thickness)								
		90 x 90	140 x 70	140 x 90	190 x 70	190 x 90	240 x 70	240 x 90	290 x 70	290 x 90
Light roof Light wall	3	0.8	1.0	1.2	1.4	1.7	1.7	2.1	2.1	2.6
	4	0.7	1.0	1.2	1.3	1.6	1.7	2.0	2.0	2.5
	5	0.7	0.9	1.1	1.3	1.6	1.6	2.0	2.0	2.4
	6	0.7	0.9	1.1	1.2	1.5	1.6	1.9	1.8	2.3
Light roof Medium wall	3	0.7	1.0	1.2	1.3	1.6	1.7	2.1	2.0	2.5
	4	0.7	0.9	1.1	1.3	1.6	1.6	2.0	2.0	2.4
	5	–	0.8	1.0	1.2	1.4	1.5	1.8	1.6	2.1
	6	–	0.8	1.0	1.1	1.4	1.4	1.7	1.5	2.0
Heavy roof Light wall	3	0.7	0.9	1.1	1.3	1.6	1.6	2.0	2.0	2.4
	4	0.7	0.9	1.1	1.2	1.5	1.6	1.9	1.8	2.3
	5	0.7	0.9	1.1	1.2	1.5	1.5	1.8	1.7	2.2
	6	–	0.8	1.0	1.1	1.4	1.5	1.8	1.6	2.0
Heavy roof Medium wall	3	0.7	0.9	1.1	1.3	1.5	1.6	1.9	1.9	2.4
	4	0.7	0.9	1.1	1.2	1.5	1.5	1.9	1.7	2.2
	5	–	0.8	1.0	1.2	1.4	1.5	1.8	1.6	2.1
	6	–	0.8	1.0	1.1	1.4	1.4	1.7	1.5	2.0

* For definition of loaded dimension see 1.3.

NOTE –

(1) Determine the loaded dimension of the lintel at floor level and the loaded dimension of the wall above the lintel at roof level and use the greater value in this table.

(2) Members 70 mm and 90 mm thick may be substituted with built-up members sized and nailed in accordance with 2.4.4.7.

Amd 2
May '06

Table 14.13 – Lintels supporting wall and floor only for 3 kPa floor load (see figure 8.10) – **No. 1 Framing and MSG 6**

Loaded dimension* of lintel (m)		Maximum span for lintel sizes listed below (m) (Width x thickness)							
		140 x 70	140 x 90	190 x 70	190 x 90	240 x 70	240 x 90	290 x 70	290 x 90
Light wall	3	0.8	1.0	1.1	1.3	1.4	1.7	1.7	2.0
Medium wall	3	0.8	0.9	1.0	1.3	1.3	1.6	1.6	2.0

* For definition of loaded dimension see 1.3.

NOTE – Members 70 mm and 90 mm thick may be substituted with built-up members sized and nailed in accordance with 2.4.4.7.

Table 14.13 – Lintels supporting wall and floor only for 3 kPa floor load (see figure 8.10) – **VSG 8 and MSG 8**

Loaded dimension* of lintel (m)		Maximum span for lintel sizes listed below (m) (Width x thickness)								
		90 x 90	140 x 70	140 x 90	190 x 70	190 x 90	240 x 70	240 x 90	290 x 70	290 x 90
Light wall	3	0.7	0.9	1.1	1.3	1.6	1.6	2.0	2.0	2.4
Medium wall	3	0.7	0.9	1.1	1.2	1.5	1.6	1.9	1.9	2.3

* For definition of loaded dimension see 1.3.

NOTE – Members 70 mm and 90 mm thick may be substituted with built-up members sized and nailed in accordance with 2.4.4.7.

Table 14.13 – Lintels supporting wall and floor only for 3 kPa floor load (see figure 8.10) – **VSG 10 and MSG 10**

Loaded dimension* of lintel (m)		Maximum span for lintel sizes listed below (m) (Width x thickness)									
		90 x 70	90 x 90	140 x 70	140 x 90	190 x 70	190 x 90	240 x 70	240 x 90	290 x 70	290 x 90
Light wall	3	0.7	0.9	1.1	1.4	1.5	1.9	2.0	2.4	2.4	2.9
Medium wall	3	0.7	0.8	1.1	1.3	1.5	1.8	1.9	2.3	2.3	2.8

* For definition of loaded dimension see 1.3.

Amd 2 May '06

NOTE – Members 70 mm and 90 mm thick may be substituted with built-up members sized and nailed in accordance with 2.4.4.7.

© The Crown in right of New Zealand, administered by the New Zealand Standards Executive. Access to this standard has been sponsored by the Ministry of Business, Innovation, and Employment under copyright license LN001498. You are not permitted to reproduce or distribute any part of this standard without prior written permission from Standards New Zealand, on behalf of New Zealand Standards Executive, unless your actions are covered by Part 3 of the Copyright Act 1994.

Copyright Standards New Zealand

© The Crown in right of New Zealand, administered by the New Zealand Standards Executive. Access to this standard has been sponsored by the Ministry of Business, Innovation, and Employment under copyright license LN001498. You are not permitted to reproduce or distribute any part of this standard without prior written permission from Standards New Zealand, on behalf of New Zealand Standards Executive, unless your actions are covered by Part 3 of the Copyright Act 1994.

Table 14.14 – Lintels supporting floor only for 3 kPa floor load (see figure 8.11) **– No. 1 Framing and MSG 6**

Loaded dimension* of lintel (m)	Maximum span for lintel sizes listed below (m) (Width x thickness)							
	140 x 70	140 x 90	190 x 70	190 x 90	240 x 70	240 x 90	290 x 70	290 x 90
3	0.8	1.0	1.1	1.4	1.4	1.7	1.7	2.1
4.5	0.7	0.8	0.9	1.1	1.2	1.4	1.4	1.7
6	–	0.7	0.8	1.0	1.0	1.2	1.2	1.5

* For definition of loaded dimension see 1.3.

NOTE – Members 70 mm and 90 mm thick may be substituted with built-up members sized and nailed in accordance with 2.4.4.7.

Table 14.14 – Lintels supporting floor only for 3 kPa floor load (see figure 8.11) **– VSG 8 and MSG 8**

Loaded dimension* of lintel (m)	Maximum span for lintel sizes listed below (m) (Width x thickness)								
	90 x 90	140 x 70	140 x 90	190 x 70	190 x 90	240 x 70	240 x 90	290 x 70	290 x 90
3	0.7	1.0	1.2	1.3	1.6	1.7	2.1	2.1	2.5
4.5	–	0.8	1.0	1.1	1.3	1.4	1.7	1.7	2.0
6	–	0.7	0.8	0.9	1.1	1.2	1.4	1.4	1.8

* For definition of loaded dimension see 1.3.

NOTE – Members 70 mm and 90 mm thick may be substituted with built-up members sized and nailed in accordance with 2.4.4.7.

Table 14.14 – Lintels supporting floor only for 3 kPa floor load (see figure 8.11) **– VSG 10 and MSG 10**

Loaded dimension* of lintel (m)	Maximum span for lintel sizes listed below (m) (Width x thickness)									
	90 x 70	90 x 90	140 x 70	140 x 90	190 x 70	190 x 90	240 x 70	240 x 90	290 x 70	290 x 90
3	0.7	0.9	1.2	1.4	1.6	2.0	2.0	2.5	2.5	3.0
4.5	–	0.7	0.9	1.2	1.3	1.6	1.7	2.0	2.0	2.4
6	–	–	0.8	1.0	1.1	1.4	1.4	1.7	1.5	1.9

* For definition of loaded dimension see 1.3.

NOTE – Members 70 mm and 90 mm thick may be substituted with built-up members sized and nailed in accordance with 2.4.4.7.

Amd 2
May '06

Copyright Standards New Zealand

Table 14.15 – Top and bottom plates for loadbearing walls, 3 kPa floor load (see 8.7.2.1) **– No. 1 Framing and MSG 6**

Plate size (mm) x (mm)		Maximum loaded dimension* of wall supporting floor (m)	Maximum spacing of trusses or rafters (m)	Light roof: Stud spacing (mm) 400	Light roof: 480	Light roof: 600	Heavy roof: 400	Heavy roof: 480	Heavy roof: 600
				Maximum loaded dimension* of wall above supporting roof (m)					
A Top plate of subfloor wall or lower of 2 storeys supporting 1 floor									
90 x 45		1.5	400	5.2	2.5	–	3.3	1.5	–
			450	3.8	1.4	–	2.3	–	–
			600	1.0	–	–	–	–	–
90 x 45 plus 140 x 35 or 2/90 x 45	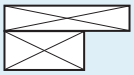 or	1.5	400	6.0	6.0	6.0	6.0	6.0	5.2
			450	6.0	6.0	6.0	6.0	6.0	4.1
			600	6.0	6.0	3.0	6.0	4.0	1.8
		3.0	400	6.0	6.0	2.2	6.0	4.6	1.3
			450	6.0	4.9	–	6.0	3.1	–
			600	4.1	–	–	2.5	–	–
B Bottom plate of lower of 2 storeys support 1 floor									
90 x 45		1.5	400	1.9	–	–	1.1	–	–
			450	–	–	–	–	–	–
90 x 70		1.5	400	6.0	6.0	6.0	6.0	6.0	5.2
			450	6.0	6.0	6.0	6.0	6.0	4.0
			600	6.0	5.5	2.7	5.2	3.4	1.6
		3	400	6.0	6.0	2.3	6.0	4.0	1.3
			450	6.0	4.1	–	4.9	2.5	–
			600	2.3	–	–	1.3	–	–
C Top plate of subfloor stud walls of 2 storey building supporting 2 floors									
90 x 45 plus 140 x 35 or 2/90 x 45	or 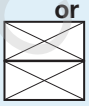	1.5	400	6.0	6.0	1.3	6.0	4.0	–
			450	6.0	4.1	–	5.8	2.5	–
			600	3.2	–	–	1.9	–	–
90 x 70		1.5	400	6.0	6.0	4.0	6.0	6.0	2.4
			450	6.0	6.0	1.9	6.0	4.5	–
			600	1.4	1.8	–	3.9	–	–
		3	400	4.4	–	–	2.7	–	–
			450	–	–	–	–	–	–

* For definition of loaded dimension see 1.3.

NOTE – Substitution with built-up members is not allowed.

Amd 2
May '06

© The Crown in right of New Zealand, administered by the New Zealand Standards Executive. Access to this standard has been sponsored by the Ministry of Business, Innovation, and Employment under copyright license LN001498. You are not permitted to reproduce or distribute any part of this standard without prior written permission from Standards New Zealand, on behalf of New Zealand Standards Executive, unless your actions are covered by Part 3 of the Copyright Act 1994.

Copyright Standards New Zealand

Table 14.15 – Top and bottom plates for loadbearing walls, 3 kPa floor load (see 8.7.2.1) **– VSG 8 and MSG 8**

Plate size (mm) x (mm)		Maximum loaded dimension* of wall supporting floor (m)	Maximum spacing of trusses or rafters (m)	Light roof			Heavy roof		
				Stud spacing (mm)					
				400	480	600	400	480	600
				Maximum loaded dimension* of wall above supporting roof (m)					
A Top plate of subfloor wall or lower of 2 storeys supporting 1 floor									
90 x 45		1.5	400 450 600	6.0 6.0 4.4	6.0 5.0 1.9	3.1 1.9 –	6.0 5.3 2.7	4.1 3.1 –	1.9 – –
		3.0	400 450	4.3 2.4	– –	– –	2.7 1.4	– –	– –
90 x 45 plus 140 x 35 or 2/90 x 45	or	1.5	400 450 600	6.0 6.0 6.0	6.0 6.0 6.0	6.0 6.0 6.0	6.0 6.0 6.0	6.0 6.0 6.0	6.0 6.0 4.5
		3.0	400 450 600	6.0 6.0 6.0	6.0 6.0 5.9	6.0 6.0 1.2	6.0 6.0 6.0	6.0 6.0 3.7	5.4 3.8 –
B Bottom plate of lower of 2 storeys support 1 floor									
90 x 45		1.5	400 450 600	6.0 4.4 1.3	3.7 2.3 –	1.3 – –	3.8 2.7 –	2.2 1.3 –	– – –
90 x 70		1.5	400 450 600	6.0 6.0 6.0	6.0 6.0 6.0	6.0 6.0 6.0	6.0 6.0 6.0	6.0 6.0 6.0	6.0 6.0 4.5
		3	400 450 600	6.0 6.0 6.0	6.0 6.0 5.0	6.0 6.0 1.2	6.0 6.0 5.7	6.0 6.0 3.1	5.7 4.0 –
C Top plate of subfloor stud walls of 2 storey building supporting 2 floors									
90 x 45 plus 140 x 35 or 2/90 x 45	or	1.5	400 450 600	6.0 6.0 6.0	6.0 6.0 5.0	6.0 5.2 –	6.0 6.0 6.0	6.0 6.0 3.1	4.8 3.2 –
		3	400 450	6.0 6.0	2.7 –	– –	6.0 4.1	1.6 –	– –
90 x 70		1.5	400 450 600	6.0 6.0 6.0	6.0 6.0 6.0	6.0 6.0 2.7	6.0 6.0 6.0	6.0 6.0 5.2	6.0 5.4 1.6
		3	400 450	6.0 6.0	6.0 3.8	– –	6.0 4.6	4.8 2.3	– –

* For definition of loaded dimension see 1.3.

NOTE – Substitution with built-up members is not allowed.

Amd 2
May '06

© The Crown in right of New Zealand, administered by the New Zealand Standards Executive. Access to this standard has been sponsored by the Ministry of Business, Innovation, and Employment under copyright license LN001498. You are not permitted to reproduce or distribute any part of this standard without prior written permission from Standards New Zealand, on behalf of New Zealand Standards Executive, unless your actions are covered by Part 3 of the Copyright Act 1994.

Copyright Standards New Zealand

Table 14.15 – Top and bottom plates for loadbearing walls, 3 kPa floor load (see 8.7.2.1) **– VSG 10 and MSG 10**

Plate size (mm) x (mm)		Maximum loaded dimension* of wall supporting floor (m)	Maximum spacing of trusses or rafters (m)	Light roof: Stud spacing (mm) 400	Light roof: 480	Light roof: 600	Heavy roof: 400	Heavy roof: 480	Heavy roof: 600
				Maximum loaded dimension* of wall above supporting roof (m)					
A Top plate of subfloor wall or lower of 2 storeys supporting 1 floor									
90 x 45		1.5	400	6.0	6.0	6.0	6.0	6.0	4.8
			450	6.0	6.0	5.9	6.0	6.0	3.7
			600	6.0	5.8	2.6	5.5	3.7	1.5
		3.0	400	6.0	6.0	1.7	6.0	4.1	–
			450	6.0	4.3	–	5.2	2.6	–
			600	2.7	–	–	1.6	–	–
90 x 45 plus 140 x 35 or 2/90 x 45	or	1.5	400	6.0	6.0	6.0	6.0	6.0	6.0
			450	6.0	6.0	6.0	6.0	6.0	6.0
			600	6.0	6.0	6.0	6.0	6.0	6.0
		3.0	400	6.0	6.0	6.0	6.0	6.0	6.0
			450	6.0	6.0	6.0	6.0	6.0	6.0
			600	6.0	6.0	6.0	6.0	6.0	4.7
B Bottom plate of lower of 2 storeys support 1 floor									
90 x 45		1.5	400	6.0	6.0	5.4	6.0	5.6	3.3
			450	6.0	6.0	3.8	6.0	4.3	2.3
			600	3.5	1.7	–	1.9	–	–
		3	400	6.0	2.8	–	3.9	1.7	–
			450	3.9	–	–	2.4	–	–
90 x 70		1.5	400	6.0	6.0	6.0	6.0	6.0	6.0
			450	6.0	6.0	6.0	6.0	6.0	6.0
			600	6.0	6.0	6.0	6.0	6.0	6.0
		3	400	6.0	6.0	6.0	6.0	6.0	6.0
			450	6.0	6.0	6.0	6.0	6.0	6.0
			600	6.0	6.0	6.0	6.0	6.0	4.9
C Top plate of subfloor stud walls of 2 storey building supporting 2 floors									
90 x 45 plus 140 x 35 or 2/90 x 45	or	1.5	400	6.0	6.0	6.0	6.0	6.0	6.0
			450	6.0	6.0	6.0	6.0	6.0	6.0
			600	6.0	6.0	6.0	6.0	6.0	4.1
		3	400	6.0	6.0	5.0	6.0	6.0	3.1
			450	6.0	6.0	1.6	6.0	6.0	–
			600	6.0	1.3	–	5.3	–	–
90 x 70		1.5	400	6.0	6.0	6.0	6.0	6.0	6.0
			450	6.0	6.0	6.0	6.0	6.0	6.0
			600	6.0	6.0	6.0	6.0	6.0	5.4
		3	400	6.0	6.0	6.0	6.0	6.0	5.1
			450	6.0	5.6	4.2	4.6	3.5	2.6

* For definition of loaded dimension see 1.3.

NOTE – Substitution with built-up members is not allowed.

Amd 2
May '06

© The Crown in right of New Zealand, administered by the New Zealand Standards Executive. Access to this standard has been sponsored by the Ministry of Business, Innovation, and Employment under copyright license LN001498. You are not permitted to reproduce or distribute any part of this standard without prior written permission from Standards New Zealand, on behalf of New Zealand Standards Executive, unless your actions are covered by Part 3 of the Copyright Act 1994.

Copyright Standards New Zealand

© The Crown in right of New Zealand, administered by the New Zealand Standards Executive. Access to this standard has been sponsored by the Ministry of Business, Innovation, and Employment under copyright license LN001498. You are not permitted to reproduce or distribute any part of this standard without prior written permission from Standards New Zealand, on behalf of New Zealand Standards Executive, unless your actions are covered by Part 3 of the Copyright Act 1994.

Table 14.16 – Structural plywood flooring (see 7.2.3.5)

Maximum spacing of joists (mm)	Minimum thickness (mm) of plywood for floor loads	
	3 kPa office General	3 kPa assembly, educational, restaurants
400	15	17
450	15	19
600	19	21

Copyright Standards New Zealand

© The Crown in right of New Zealand, administered by the New Zealand Standards Executive. Access to this standard has been sponsored by the Ministry of Business, Innovation, and Employment under copyright license LN001498. You are not permitted to reproduce or distribute any part of this standard without prior written permission from Standards New Zealand, on behalf of New Zealand Standards Executive, unless your actions are covered by Part 3 of the Copyright Act 1994.

SECTION 15
0.5 kPa or 1 kPa SNOW LOADING
ADDITIONAL INFORMATION (NORMATIVE)

Amd 1 Dec '00

15.1 General **15**-3

15.2 Snow loading **15**-3

Table

15.1 Reference table for lintel load cases **15**-5

15.2 Lintels supporting roof only ..... **15**-5A — Amd 2 May '06

15.3 Lintels supporting roof and wall **15**-6

15.4 Lintels supporting roof and wall with 1.5 or 2 kPa floor loads ..... **15**-6B — Amd 2 May '06

15.5 Lintels supporting roof and wall with 3 kPa floor loads **15**-7

15.6 Rafters ..... **15**-8 — Amd 1 Dec '00

15.7 Underpurlins and ridge beams **15**-14

15.8 Verandah beams – Low to very high wind zones ..... **15**-16 — Amd 2 May '06

Figure

15.1 Snow zones **15**-4

Copyright Standards New Zealand

© The Crown in right of New Zealand, administered by the New Zealand Standards Executive. Access to this standard has been sponsored by the Ministry of Business, Innovation, and Employment under copyright license LN001498. You are not permitted to reproduce or distribute any part of this standard without prior written permission from Standards New Zealand, on behalf of New Zealand Standards Executive, unless your actions are covered by Part 3 of the Copyright Act 1994.

Copyright Standards New Zealand

Amd 1 Dec '00

15 0.5 kPa or 1 kPa SNOW LOADING

15.1 General

NZS 3604 as modified by this section shall be used for the design of buildings that are required to carry snow loadings of 0.5 kPa or 1 kPa. See tables 15.1 – 15.8.

15.2 Snow loading

15.2.1

Amd 1 Dec '00

Allowance for snow loading is not required in Zone 0 or at altitudes less than 200 m in Zones 1, 2 and 3. Buildings in Snow Zones 1 to 5 (see figure 15.1) shall be designed to carry snow loadings of 0.5 kPa or 1 kPa depending on the altitude of a building site as given in the table in figure 15.1.

15.2.2

At higher altitudes than those given by 15.2.1 the building shall be the subject of *specific engineering design*.

15.2.3

Member sizes, spans and fixings shall comply with tables 15.2 – 15.8 for 0.5 kPa snow loading.

For 1 kPa snow loading, member sizes and fixings shall be read directly from tables 15.2 – 15.8 as if the snow loading was 0.5 kPa. Member spans however shall be multiplied by the following factors:

Table	Description of member	Factor
15.2	Lintels supporting roof only	0.8
15.3	Lintels supporting roof and wall	0.9
15.4	Lintels supporting roof and wall with 1.5 or 2 kPa floor loads	1.0
15.5	Lintels supporting roof and wall with 3 kPa floor loads	1.0
15.6 (a)(b)(c)	Rafters, light roof	0.85
15.6 (d) (e)	Rafters, heavy roof	1.0
15.6 (f)	Valley rafters	1.0
15.7 (a)(b)	Underpurlins and ridge beams	0.85
15.8	Verandah beams	1.0

Amd 1 Dec '00

Copyright Standards New Zealand

© The Crown in right of New Zealand, administered by the New Zealand Standards Executive. Access to this standard has been sponsored by the Ministry of Business, Innovation, and Employment under copyright license LN001498. You are not permitted to reproduce or distribute any part of this standard without prior written permission from Standards New Zealand, on behalf of New Zealand Standards Executive, unless your actions are covered by Part 3 of the Copyright Act 1994.

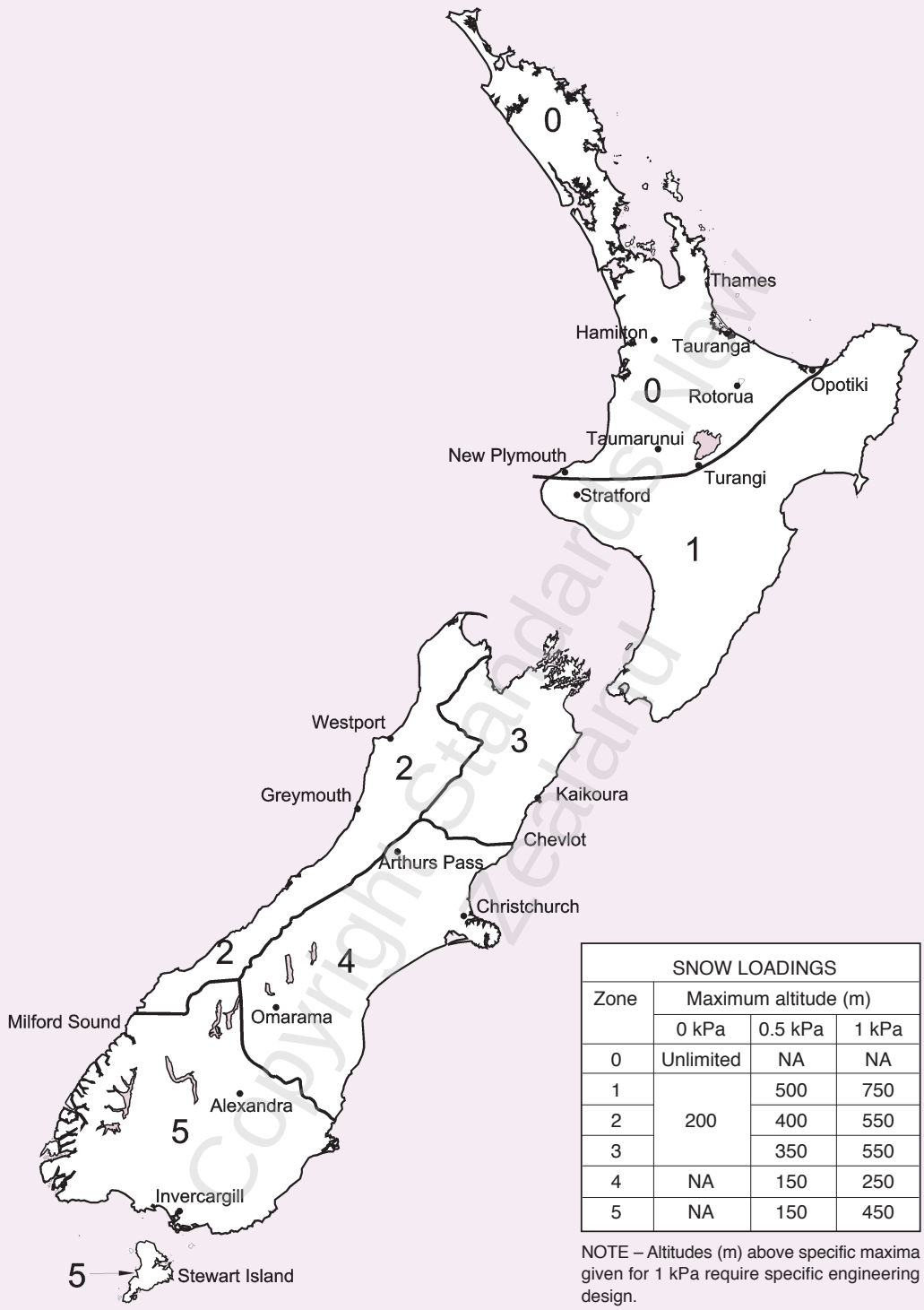

SNOW LOADINGS			
Zone	Maximum altitude (m)		
	0 kPa	0.5 kPa	1 kPa
0	Unlimited	NA	NA
1	200	500	750
2		400	550
3		350	550
4	NA	150	250
5	NA	150	450

NOTE – Altitudes (m) above specific maxima given for 1 kPa require specific engineering design.

Amd 1
Dec '00

Figure 15.1 – Snow zones

© The Crown in right of New Zealand, administered by the New Zealand Standards Executive. Access to this standard has been sponsored by the Ministry of Business, Innovation, and Employment under copyright license LN001498. You are not permitted to reproduce or distribute any part of this standard without prior written permission from Standards New Zealand, on behalf of New Zealand Standards Executive, unless your actions are covered by Part 3 of the Copyright Act 1994.

© The Crown in right of New Zealand, administered by the New Zealand Standards Executive. Access to this standard has been sponsored by the Ministry of Business, Innovation, and Employment under copyright license LN001498. You are not permitted to reproduce or distribute any part of this standard without prior written permission from Standards New Zealand, on behalf of New Zealand Standards Executive, unless your actions are covered by Part 3 of the Copyright Act 1994.

Table 15.1 – Reference table for lintel load cases

Table No.	Supporting			Load type			
	Roof	Walls	Floor	Roof	Snow*	Walls	Floor
					(kPa)		(kPa)
15.2	✓			Light	0.5		
	✓			Heavy	0.5		
15.3	✓	✓		Light	0.5	Light	
	✓	✓		Light	0.5	Medium	
	✓	✓		Heavy	0.5	Light	
	✓	✓		Heavy	0.5	Medium	
15.4	✓	✓	✓	Light	0.5	Light	1.5 or 2
	✓	✓	✓	Light	0.5	Medium	1.5 or 2
	✓	✓	✓	Heavy	0.5	Light	1.5 or 2
	✓	✓	✓	Heavy	0.5	Medium	1.5 or 2
15.5	✓	✓	✓	Light	0.5	Light	3
	✓	✓	✓	Light	0.5	Medium	3
	✓	✓	✓	Heavy	0.5	Light	3
	✓	✓	✓	Heavy	0.5	Medium	3

Amd 1 Dec '00

* For 1 kPa snow loads refer to 15.2.3.

Copyright Standards New Zealand

© The Crown in right of New Zealand, administered by the New Zealand Standards Executive. Access to this standard has been sponsored by the Ministry of Business, Innovation, and Employment under copyright license LN001498. You are not permitted to reproduce or distribute any part of this standard without prior written permission from Standards New Zealand, on behalf of New Zealand Standards Executive, unless your actions are covered by Part 3 of the Copyright Act 1994.

Table 15.2 – Lintels supporting roof only (see figure 8.7) **– No. 1 Framing and MSG 6**

Loaded dimension* of lintel (m)		Maximum span for lintel sizes listed below (m) (Width x thickness)									
		90 x 70	90 x 90	140 x 70	140 x 90	190 x 70	190 x 90	240 x 70	240 x 90	290 x 70	290 x 90
Light roof	3	0.9	1.0	1.5	1.6	2.0	2.2	2.6	2.8	3.1	3.4
	4	0.8	0.9	1.3	1.5	1.8	2.0	2.3	2.6	2.8	3.1
	5	0.8	0.9	1.2	1.4	1.7	1.9	2.1	2.4	2.6	2.9
	6	0.7	0.8	1.1	1.3	1.5	1.8	1.9	2.3	2.3	2.8
Heavy roof	3	0.7	0.8	1.2	1.3	1.6	1.8	2.0	2.3	2.4	2.7
	4	–	0.8	1.0	1.2	1.4	1.6	1.8	2.1	2.2	2.5
	5	–	0.7	0.9	1.1	1.3	1.5	1.6	1.9	2.0	2.4
	6	–	–	0.8	1.0	1.2	1.4	1.5	1.8	1.8	2.2

* For definition of loaded dimension see 1.3.

NOTE – Members 70 mm and 90 mm thick may be substituted with built-up members sized and nailed in accordance with 2.4.4.7.

Table 15.2 – Lintels supporting roof only (see figure 8.7) **– VSG 8 and MSG 8**

Loaded dimension* of lintel (m)		Maximum span for lintel sizes listed below (m) (Width x thickness)									
		90 x 70	90 x 90	140 x 70	140 x 90	190 x 70	190 x 90	240 x 70	240 x 90	290 x 70	290 x 90
Light roof	3	1.0	1.1	1.6	1.8	2.3	2.5	2.9	3.1	3.5	3.8
	4	1.0	1.0	1.5	1.6	2.1	2.3	2.6	2.9	3.2	3.5
	5	0.9	1.0	1.4	1.5	1.9	2.1	2.5	2.7	3.0	3.2
	6	0.8	0.9	1.3	1.5	1.8	2.0	2.3	2.5	2.8	3.1
Heavy roof	3	0.8	0.9	1.3	1.4	1.8	2.0	2.3	2.5	2.8	3.0
	4	0.8	0.8	1.2	1.3	1.7	1.8	2.1	2.3	2.6	2.8
	5	0.7	0.8	1.1	1.2	1.5	1.7	1.9	2.2	2.3	2.6
	6	–	0.7	1.0	1.2	1.4	1.6	1.8	2.0	2.1	2.5

* For definition of loaded dimension see 1.3.

NOTE – Members 70 mm and 90 mm thick may be substituted with built-up members sized and nailed in accordance with 2.4.4.7.

Amd 2 May '06

Copyright Standards New Zealand

© The Crown in right of New Zealand, administered by the New Zealand Standards Executive. Access to this standard has been sponsored by the Ministry of Business, Innovation, and Employment under copyright license LN001498. You are not permitted to reproduce or distribute any part of this standard without prior written permission from Standards New Zealand, on behalf of New Zealand Standards Executive, unless your actions are covered by Part 3 of the Copyright Act 1994.

Table 15.2 – Lintels supporting roof only (see figure 8.7) **– VSG 10 and MSG 10**

Loaded dimension* of lintel (m)		Maximum span for lintel sizes listed below (m) (Width x thickness)									
		90 x 70	90 x 90	140 x 70	140 x 90	190 x 70	190 x 90	240 x 70	240 x 90	290 x 70	290 x 90
Light roof	3	1.1	1.2	1.8	1.9	2.4	2.6	3.1	3.3	3.7	4.0
	4	1.0	1.1	1.6	1.8	2.2	2.4	2.8	3.1	3.4	3.7
	5	1.0	1.1	1.5	1.7	2.1	2.3	2.6	2.9	3.2	3.5
	6	0.9	1.0	1.4	1.6	2.0	2.1	2.5	2.7	3.0	3.3
Heavy roof	3	0.9	1.0	1.4	1.6	2.0	2.1	2.5	2.7	3.0	3.3
	4	0.8	0.9	1.3	1.4	1.8	2.0	2.3	2.5	2.8	3.0
	5	0.8	0.8	1.2	1.3	1.7	1.8	2.1	2.3	2.6	2.8
	6	0.7	0.8	1.2	1.3	1.6	1.7	2.0	2.2	2.4	2.7

* For definition of loaded dimension see 1.3.

Amd 2 May '06

NOTE – Members 70 mm and 90 mm thick may be substituted with built-up members sized and nailed in accordance with 2.4.4.7.

Copyright Standards New Zealand

Table 15.3 – Lintels supporting roof and wall (see figure 8.8) **– No. 1 Framing and MSG 6**

Loaded dimension* of lintel (m)		Maximum span for lintel sizes listed below (m) (Width x thickness)									
		90 x 70	90 x 90	140 x 70	140 x 90	190 x 70	190 x 90	240 x 70	240 x 90	290 x 70	290 x 90
Light roof Light wall	3	0.8	0.9	1.3	1.4	1.8	2.0	2.3	2.5	2.8	3.0
	4	0.8	0.9	1.2	1.4	1.7	1.8	2.1	2.3	2.6	2.8
	5	0.7	0.8	1.1	1.3	1.5	1.8	2.0	2.2	2.4	2.7
	6	0.7	0.8	1.0	1.2	1.4	1.7	1.8	2.1	2.2	2.6
Light roof Medium wall	3	0.7	0.8	1.2	1.3	1.6	1.8	2.0	2.3	2.5	2.8
	4	0.7	0.8	1.1	1.3	1.5	1.7	1.9	2.2	2.3	2.6
	5	–	–	0.8	1.0	1.1	1.4	1.4	1.7	1.7	2.1
	6	–	–	0.8	0.9	1.0	1.3	1.3	1.6	1.6	2.0
Heavy roof Light wall	3	0.7	0.8	1.0	1.2	1.4	1.7	1.8	2.1	2.2	2.6
	4	–	0.7	0.9	1.1	1.3	1.6	1.6	2.0	2.0	2.4
	5	–	0.7	0.9	1.0	1.2	1.4	1.5	1.8	1.8	2.2
	6	–	–	0.8	1.0	1.1	1.3	1.4	1.7	1.7	2.1
Heavy roof Medium wall	3	–	0.7	1.0	1.1	1.3	1.6	1.7	2.0	2.0	2.4
	4	–	0.7	0.9	1.1	1.2	1.5	1.5	1.9	1.9	2.3
	5	–	–	0.8	1.0	1.1	1.4	1.4	1.7	1.7	2.1
	6	–	–	0.8	0.9	1.0	1.3	1.3	1.6	1.6	2.0

* For definition of loaded dimension see 1.3.

NOTE – Members 70 mm and 90 mm thick may be substituted with built-up members sized and nailed in accordance with 2.4.4.7.

Table 15.3 – Lintels supporting roof and wall (see figure 8.8) **– VSG 8 and MSG 8**

Loaded dimension* of lintel (m)		Maximum span for lintel sizes listed below (m) (Width x thickness)									
		90 x 70	90 x 90	140 x 70	140 x 90	190 x 70	190 x 90	240 x 70	240 x 90	290 x 70	290 x 90
Light roof Light wall	3	0.9	1.0	1.5	1.6	2.0	2.2	2.5	2.8	3.1	3.3
	4	0.9	0.9	1.4	1.5	1.9	2.0	2.4	2.6	2.9	3.1
	5	0.8	0.9	1.3	1.4	1.8	1.9	2.3	2.5	2.7	3.0
	6	0.8	0.9	1.2	1.4	1.7	1.9	2.2	2.4	2.6	2.9
Light roof Medium wall	3	0.8	0.9	1.3	1.5	1.8	2.0	2.3	2.5	2.8	3.1
	4	0.8	0.9	1.3	1.4	1.7	1.9	2.2	2.4	2.7	2.9
	5	–	0.7	1.0	1.1	1.3	1.6	1.7	2.0	2.0	2.4
	6	–	0.7	0.9	1.1	1.2	1.5	1.6	1.9	1.9	2.3
Heavy roof Light wall	3	0.8	0.8	1.2	1.3	1.7	1.8	2.1	2.3	2.6	2.8
	4	0.7	0.8	1.1	1.3	1.5	1.7	1.9	2.2	2.4	2.6
	5	–	0.7	1.0	1.2	1.4	1.6	1.8	2.1	2.2	2.5
	6	–	0.7	0.9	1.1	1.3	1.5	1.7	2.0	2.0	2.3
Heavy roof Medium wall	3	0.7	0.8	1.1	1.3	1.6	1.7	2.0	2.2	2.4	2.7
	4	0.7	0.8	1.0	1.2	1.4	1.6	1.8	2.1	2.2	2.5
	5	–	0.7	1.0	1.1	1.3	1.6	1.7	2.0	2.0	2.4
	6	–	0.7	0.9	1.1	1.2	1.5	1.6	1.9	1.9	2.3

* For definition of loaded dimension see 1.3.

NOTE – Members 70 mm and 90 mm thick may be substituted with built-up members sized and nailed in accordance with 2.4.4.7.

Amd 2
May '06

© The Crown in right of New Zealand, administered by the New Zealand Standards Executive. Access to this standard has been sponsored by the Ministry of Business, Innovation, and Employment under copyright license LN001498. You are not permitted to reproduce or distribute any part of this standard without prior written permission from Standards New Zealand, on behalf of New Zealand Standards Executive, unless your actions are covered by Part 3 of the Copyright Act 1994.

Copyright Standards New Zealand

© The Crown in right of New Zealand, administered by the New Zealand Standards Executive. Access to this standard has been sponsored by the Ministry of Business, Innovation, and Employment under copyright license LN001498. You are not permitted to reproduce or distribute any part of this standard without prior written permission from Standards New Zealand, on behalf of New Zealand Standards Executive, unless your actions are covered by Part 3 of the Copyright Act 1994.

Table 15.3 – Lintels supporting roof and wall (see figure 8.8) **– VSG 10 and MSG 10**

Loaded dimension* of lintel (m)		Maximum span for lintel sizes listed below (m) (Width x thickness)									
		90 x 70	90 x 90	140 x 70	140 x 90	190 x 70	190 x 90	240 x 70	240 x 90	290 x 70	290 x 90
Light roof Light wall	3	1.0	1.1	1.6	1.7	2.1	2.3	2.7	3.0	3.3	3.6
	4	0.9	1.0	1.5	1.6	2.0	2.2	2.6	2.8	3.1	3.4
	5	0.9	1.0	1.4	1.5	1.9	2.1	2.4	2.7	3.0	3.2
	6	0.8	0.9	1.3	1.5	1.8	2.0	2.3	2.5	2.8	3.1
Light roof Medium wall	3	0.9	1.0	1.4	1.6	2.0	2.1	2.5	2.7	3.0	3.3
	4	0.9	0.9	1.4	1.5	1.9	2.0	2.4	2.6	2.9	3.1
	5	0.7	0.8	1.1	1.2	1.5	1.7	2.0	2.1	2.4	2.6
	6	0.7	0.7	1.1	1.2	1.5	1.6	1.9	2.0	2.3	2.5
Heavy roof Light wall	3	0.8	0.9	1.3	1.5	1.8	2.0	2.3	2.5	2.8	3.1
	4	0.8	0.9	1.2	1.4	1.7	1.9	2.2	2.3	2.6	2.8
	5	0.7	0.8	1.2	1.3	1.6	1.7	2.0	2.2	2.5	2.7
	6	0.7	0.8	1.1	1.2	1.5	1.7	1.9	2.1	2.4	2.6
Heavy roof Medium wall	3	0.8	0.9	1.3	1.4	1.7	1.9	2.2	2.4	2.6	2.9
	4	0.7	0.8	1.2	1.3	1.6	1.8	2.1	2.2	2.5	2.7
	5	0.7	0.8	1.1	1.2	1.5	1.7	2.0	2.1	2.4	2.6
	6	0.7	0.7	1.1	1.2	1.5	1.6	1.9	2.0	2.3	2.5

* For definition of loaded dimension see 1.3.

Amd 2 May '06

NOTE – Members 70 mm and 90 mm thick may be substituted with built-up members sized and nailed in accordance with 2.4.4.7.

Copyright Standards New Zealand

© The Crown in right of New Zealand, administered by the New Zealand Standards Executive. Access to this standard has been sponsored by the Ministry of Business, Innovation, and Employment under copyright license LN001498. You are not permitted to reproduce or distribute any part of this standard without prior written permission from Standards New Zealand, on behalf of New Zealand Standards Executive, unless your actions are covered by Part 3 of the Copyright Act 1994.

Table 15.4 – Lintels supporting roof and wall with 1.5 or 2 kPa floor loads (see figure 8.9) **– No. 1 Framing and MSG 6**

Loaded dimension* of lintel (m)		Maximum span for lintel sizes listed below (m) (Width x thickness)							
		140 x 70	140 x 90	190 x 70	190 x 90	240 x 70	240 x 90	290 x 70	290 x 90
Light roof Light wall	3	0.8	1.0	1.1	1.3	1.4	1.7	1.7	2.0
	4	0.8	0.9	1.0	1.3	1.3	1.6	1.6	2.0
	5	0.7	0.9	1.0	1.2	1.3	1.6	1.6	1.9
	6	0.7	0.9	1.0	1.2	1.2	1.5	1.5	1.8
Light roof Medium wall	3	0.8	0.9	1.0	1.3	1.3	1.6	1.6	2.0
	4	0.7	0.9	1.0	1.2	1.3	1.6	1.6	1.9
	5	–	0.8	0.9	1.1	1.1	1.4	1.4	1.7
	6	–	0.8	0.9	1.0	1.1	1.3	1.3	1.6
Heavy roof Light wall	3	0.7	0.9	1.0	1.2	1.3	1.6	1.6	1.9
	4	0.7	0.8	1.0	1.2	1.2	1.5	1.5	1.8
	5	0.7	0.8	0.9	1.1	1.2	1.4	1.4	1.7
	6	–	0.8	0.9	1.1	1.1	1.4	1.4	1.7
Heavy roof Medium wall	3	0.7	0.9	1.0	1.2	1.2	1.5	1.5	1.8
	4	0.7	0.8	0.9	1.1	1.2	1.4	1.4	1.8
	5	–	0.8	0.9	1.1	1.1	1.4	1.4	1.7
	6	–	0.8	0.9	1.0	1.1	1.3	1.3	1.6

* For definition of loaded dimension see 1.3.

NOTE –

(1) Determine the loaded dimension of the lintel at floor level and the loaded dimension of the wall above the lintel at roof level and use the greater value in this table.

(2) Members 70 mm and 90 mm thick may be substituted with built-up members sized and nailed in accordance with 2.4.4.7.

Table 15.4 – Lintels supporting roof and wall with 1.5 or 2 kPa floor loads (see figure 8.9) **– VSG 8 and MSG 8**

Loaded dimension* of lintel (m)		Maximum span for lintel sizes listed below (m) (Width x thickness)								
		90 x 90	140 x 70	140 x 90	190 x 70	190 x 90	240 x 70	240 x 90	290 x 70	290 x 90
Light roof Light wall	3	0.7	0.9	1.1	1.3	1.6	1.6	2.0	2.0	2.4
	4	0.7	0.9	1.1	1.2	1.5	1.6	1.9	1.9	2.3
	5	0.7	0.9	1.1	1.2	1.5	1.5	1.9	1.8	2.2
	6	–	0.8	1.0	1.2	1.4	1.5	1.8	1.8	2.2
Light roof Medium wall	3	0.7	0.9	1.1	1.2	1.5	1.6	1.9	1.9	2.3
	4	0.7	0.9	1.1	1.2	1.5	1.5	1.9	1.9	2.3
	5	–	0.8	0.9	1.1	1.3	1.4	1.6	1.6	2.0
	6	–	0.7	0.9	1.0	1.2	1.3	1.6	1.6	1.9
Heavy roof Light wall	3	0.7	0.9	1.1	1.2	1.5	1.5	1.9	1.9	2.3
	4	–	0.8	1.0	1.1	1.4	1.5	1.8	1.8	2.1
	5	–	0.8	1.0	1.1	1.3	1.4	1.7	1.7	2.1
	6	–	0.8	0.9	1.0	1.3	1.3	1.6	1.6	2.0
Heavy roof Medium wall	3	–	0.8	1.0	1.2	1.4	1.5	1.8	1.8	2.2
	4	–	0.8	1.0	1.1	1.4	1.4	1.7	1.7	2.1
	5	–	0.8	0.9	1.1	1.3	1.4	1.6	1.6	2.0
	6	–	0.7	0.9	1.0	1.2	1.3	1.6	1.6	1.9

* For definition of loaded dimension see 1.3.

NOTE –

(1) Determine the loaded dimension of the lintel at floor level and the loaded dimension of the wall above the lintel at roof level and use the greater value in this table.

(2) Members 70 mm and 90 mm thick may be substituted with built-up members sized and nailed in accordance with 2.4.4.7.

Amd 2 May '06

Copyright Standards New Zealand

© The Crown in right of New Zealand, administered by the New Zealand Standards Executive. Access to this standard has been sponsored by the Ministry of Business, Innovation, and Employment under copyright license LN001498. You are not permitted to reproduce or distribute any part of this standard without prior written permission from Standards New Zealand, on behalf of New Zealand Standards Executive, unless your actions are covered by Part 3 of the Copyright Act 1994.

Table 15.4 – Lintels supporting roof and wall with 1.5 or 2 kPa floor loads (see figure 8.9) **– VSG 10 and MSG 10**

Loaded dimension* of lintel (m)		Maximum span for lintel sizes listed below (m) (Width x thickness)									
		90 x 70	90 x 90	140 x 70	140 x 90	190 x 70	190 x 90	240 x 70	240 x 90	290 x 70	290 x 90
Light roof Light wall	3	0.7	0.8	1.1	1.3	1.5	1.8	2.0	2.3	2.4	2.8
	4	0.7	0.8	1.1	1.3	1.5	1.8	1.9	2.2	2.3	2.7
	5	0.7	0.8	1.0	1.3	1.4	1.7	1.8	2.2	2.2	2.6
	6	–	0.8	1.0	1.2	1.4	1.7	1.8	2.1	2.1	2.6
Light roof Medium wall	3	0.7	0.8	1.1	1.3	1.5	1.7	1.9	2.2	2.3	2.7
	4	0.7	0.8	1.1	1.2	1.4	1.7	1.8	2.1	2.2	2.6
	5	–	0.7	0.9	1.1	1.3	1.5	1.6	1.9	1.9	2.3
	6	–	0.7	0.9	1.1	1.2	1.4	1.6	1.8	1.8	2.2
Heavy roof Light wall	3	0.7	0.8	1.1	1.2	1.4	1.7	1.8	2.1	2.2	2.6
	4	–	0.7	1.0	1.2	1.4	1.6	1.7	2.0	2.1	2.5
	5	–	0.7	1.0	1.1	1.3	1.5	1.7	1.9	2.0	2.4
	6	–	0.7	0.9	1.1	1.3	1.5	1.6	1.9	1.9	2.3
Heavy roof Medium wall	3	–	0.7	1.0	1.2	1.4	1.6	1.8	2.0	2.2	2.5
	4	–	0.7	1.0	1.1	1.3	1.5	1.7	2.0	2.1	2.4
	5	–	0.7	0.9	1.1	1.3	1.5	1.6	1.9	1.9	2.3
	6	–	0.7	0.9	1.1	1.2	1.4	1.6	1.8	1.8	2.2

* For definition of loaded dimension see 1.3.

NOTE –

(1) Determine the loaded dimension of the lintel at floor level and the loaded dimension of the wall above the lintel at roof level and use the greater value in this table.

Amd 2 May '06 (2) Members 70 mm and 90 mm thick may be substituted with built-up members sized and nailed in accordance with 2.4.4.7.

Copyright Standards New Zealand

© The Crown in right of New Zealand, administered by the New Zealand Standards Executive. Access to this standard has been sponsored by the Ministry of Business, Innovation, and Employment under copyright license LN001498. You are not permitted to reproduce or distribute any part of this standard without prior written permission from Standards New Zealand, on behalf of New Zealand Standards Executive, unless your actions are covered by Part 3 of the Copyright Act 1994.

Table 15.5 – Lintels supporting roof and wall with 3 kPa floor loads (see figure 8.9) **– No. 1 Framing and MSG 6**

Loaded dimension* of lintel (m)		Maximum span for lintel sizes listed below (m) (Width x thickness)							
		140 x 70	140 x 90	190 x 70	190 x 90	240 x 70	240 x 90	290 x 70	290 x 90
Light roof Light wall	3	0.7	0.8	1.0	1.2	1.2	1.5	1.5	1.8
	4	0.7	0.8	0.9	1.1	1.2	1.4	1.4	1.7
	5	–	0.8	0.9	1.1	1.1	1.4	1.4	1.7
	6	–	0.8	0.9	1.1	1.1	1.4	1.4	1.6
Light roof Medium wall	3	0.7	0.8	0.9	1.1	1.2	1.4	1.4	1.7
	4	–	0.8	0.9	1.1	1.1	1.4	1.4	1.7
	5	–	0.7	0.8	1.0	1.0	1.3	1.3	1.5
	6	–	0.7	0.8	1.0	1.0	1.2	1.2	1.5
Heavy roof Light wall	3	0.7	0.8	0.9	1.1	1.1	1.4	1.4	1.7
	4	–	0.8	0.9	1.1	1.1	1.3	1.3	1.6
	5	–	0.7	0.8	1.0	1.1	1.3	1.3	1.6
	6	–	0.7	0.8	1.0	1.0	1.2	1.2	1.5
Heavy roof Medium wall	3	–	0.8	0.9	1.1	1.1	1.4	1.4	1.7
	4	–	0.7	0.8	1.0	1.1	1.3	1.3	1.6
	5	–	0.7	0.8	1.0	1.0	1.3	1.3	1.5
	6	–	0.7	0.8	1.0	1.0	1.2	1.2	1.5

* For definition of loaded dimension see 1.3.

NOTE –

(1) Determine the loaded dimension of the lintel at floor level and the loaded dimension of the wall above the lintel at roof level and use the greater value in this table.

(2) Members 70 mm and 90 mm thick may be substituted with built-up members sized and nailed in accordance with 2.4.4.7.

Table 15.5 – Lintels supporting roof and wall with 3 kPa floor loads (see figure 8.9) **– VSG 8 and MSG 8**

Loaded dimension* of lintel (m)		Maximum span for lintel sizes listed below (m) (Width x thickness)							
		140 x 70	140 x 90	190 x 70	190 x 90	240 x 70	240 x 90	290 x 70	290 x 90
Light roof Light wall	3	0.8	1.0	1.1	1.4	1.4	1.8	1.8	2.1
	4	0.8	1.0	1.1	1.3	1.4	1.7	1.7	2.1
	5	0.8	0.9	1.1	1.3	1.4	1.7	1.7	2.0
	6	0.8	0.9	1.0	1.3	1.3	1.6	1.6	2.0
Light roof Medium wall	3	0.8	1.0	1.1	1.3	1.4	1.7	1.7	2.1
	4	0.8	1.0	1.1	1.3	1.4	1.7	1.7	2.0
	5	0.7	0.9	1.0	1.2	1.2	1.5	1.5	1.8
	6	0.7	0.8	0.9	1.1	1.2	1.5	1.5	1.8
Heavy roof Light wall	3	0.8	1.0	1.1	1.3	1.4	1.7	1.7	2.0
	4	0.7	0.9	1.0	1.3	1.3	1.6	1.6	1.9
	5	0.7	0.9	1.0	1.2	1.3	1.5	1.5	1.9
	6	0.7	0.8	1.0	1.2	1.2	1.5	1.5	1.8
Heavy roof Medium wall	3	0.8	0.9	1.0	1.3	1.3	1.6	1.6	2.0
	4	0.7	0.9	1.0	1.2	1.3	1.6	1.6	1.9
	5	0.7	0.9	1.0	1.2	1.2	1.5	1.5	1.8
	6	0.7	0.8	0.9	1.1	1.2	1.5	1.5	1.8

* For definition of loaded dimension see 1.3.

NOTE –

(1) Determine the loaded dimension of the lintel at floor level and the loaded dimension of the wall above the lintel at roof level and use the greater value in this table.

(2) Members 70 mm and 90 mm thick may be substituted with built-up members sized and nailed in accordance with 2.4.4.7.

Amd 2 May '06

Copyright Standards New Zealand

© The Crown in right of New Zealand, administered by the New Zealand Standards Executive. Access to this standard has been sponsored by the Ministry of Business, Innovation, and Employment under copyright license LN001498. You are not permitted to reproduce or distribute any part of this standard without prior written permission from Standards New Zealand, on behalf of New Zealand Standards Executive, unless your actions are covered by Part 3 of the Copyright Act 1994.

Table 15.5 – Lintels supporting roof and wall with 3 kPa floor loads (see figure 8.9) **– VSG 10 and MSG 10**

Loaded dimension* of lintel (m)		Maximum span for lintel sizes listed below (m) (Width x thickness)								
		90 x 90	140 x 70	140 x 90	190 x 70	190 x 90	240 x 70	240 x 90	290 x 70	290 x 90
Light roof Light wall	3	0.8	1.0	1.2	1.4	1.7	1.7	2.1	2.1	2.6
	4	0.7	1.0	1.2	1.3	1.6	1.7	2.0	2.0	2.5
	5	0.7	0.9	1.1	1.3	1.6	1.6	2.0	2.0	2.4
	6	0.7	0.9	1.1	1.2	1.5	1.6	1.9	1.8	2.3
Light roof Medium wall	3	0.7	1.0	1.2	1.3	1.6	1.7	2.1	2.0	2.5
	4	0.7	0.9	1.1	1.3	1.6	1.6	2.0	2.0	2.4
	5	0.6	0.8	1.0	1.2	1.4	1.5	1.8	1.6	2.1
	6	0.6	0.8	1.0	1.1	1.4	1.4	1.7	1.5	2.0
Heavy roof Light wall	3	0.7	0.9	1.1	1.3	1.6	1.6	2.0	2.0	2.4
	4	0.7	0.9	1.1	1.2	1.5	1.6	1.9	1.8	2.3
	5	0.7	0.9	1.1	1.2	1.5	1.5	1.8	1.7	2.2
	6	0.6	0.8	1.0	1.1	1.4	1.5	1.8	1.6	2.0
Heavy roof Medium wall	3	0.7	0.9	1.1	1.3	1.5	1.6	1.9	1.9	2.4
	4	0.7	0.9	1.1	1.2	1.5	1.5	1.9	1.7	2.2
	5	–	0.8	1.0	1.2	1.4	1.5	1.8	1.6	2.1
	6	–	0.8	1.0	1.1	1.4	1.4	1.7	1.5	2.0

* For definition of loaded dimension see 1.3.

NOTE –

(1) Determine the loaded dimension of the lintel at floor level and the loaded dimension of the wall above the lintel at roof level and use the greater value in this table.

Amd 2 May '06 (2) Members 70 mm and 90 mm thick may be substituted with built-up members sized and nailed in accordance with 2.4.4.7.

Copyright Standards New Zealand

© The Crown in right of New Zealand, administered by the New Zealand Standards Executive. Access to this standard has been sponsored by the Ministry of Business, Innovation, and Employment under copyright license LN001498. You are not permitted to reproduce or distribute any part of this standard without prior written permission from Standards New Zealand, on behalf of New Zealand Standards Executive, unless your actions are covered by Part 3 of the Copyright Act 1994.

Table 15.6 – Rafters (see 10.2.1.3.2) **– No. 1 Framing and MSG 6**

(a) Light roof for low and medium wind zone

Rafter size (Width x thickness)	Maximum span of rafters at a maximum spacing (mm) and their fixing types (mm)							
	400		600		900		1200	
	Span	Fixing type	Span	Fixing type	Span	Fixing type	Span	Fixing type
(mm x mm)	(m)		(m)		(m)		(m)	
70 x 35	1.7	A	1.5	A	1.3	A	1.2	A
90 x 35	2.2	A	1.9	A	1.6	B	1.5	B
140 x 35	3.1	A	2.7	B	2.4	B	2.1	B
70 x 45	1.8	A	1.6	A	1.4	A	1.3	A
90 x 45	2.4	A	2.1	A	1.8	A	1.6	B
140 x 45	3.7	A	3.2	B	2.8	B	2.6	B
190 x 45	4.5	B	3.9	B	3.4	B	3.1	B
240 x 45	4.9	B	4.2	B	3.7	B	3.3	B
290 x 45	5.2	B	4.5	B	3.9	B	3.6	B
90 x 70	2.7	A	2.4	A	2.1	B	1.9	B
140 x 70	4.3	B	3.8	B	3.3	B	3.0	B
190 x 70	5.9	B	5.1	B	4.5	B	4.0	B
240 x 70	7.4	B	6.5	B	5.6	B	5.1	B
290 x 70	8.1	B	7.0	B	6.1	B	5.5	C

Fixing type	Fixing to resist uplift	Alternative fixing capacity (kN)
A	2/100 x 3.75 skewed nails	0.7
B	2/100 x 3.75 skewed nails + 1 wire dog	2.7
C	2/100 x 3.75 skewed nails + 2 wire dogs	4.7

NOTE –

(1) Rafter spans may be increased by 10 % for rafters continuous over 2 or more spans that have not been birds mouthed at intermediate supports.

(2) Fixing types for continuous spans shall have double the capacity to that listed in the table.

(3) See table 10.13 for fixing types and capacity. Fixings suitable for low and medium wind zones.

(4) Members 70 mm thick may be substituted with built-up members sized and nailed in accordance with 2.4.4.7.

Amd 2 May '06

Copyright Standards New Zealand

© The Crown in right of New Zealand, administered by the New Zealand Standards Executive. Access to this standard has been sponsored by the Ministry of Business, Innovation, and Employment under copyright license LN001498. You are not permitted to reproduce or distribute any part of this standard without prior written permission from Standards New Zealand, on behalf of New Zealand Standards Executive, unless your actions are covered by Part 3 of the Copyright Act 1994.

Table 15.6 – Rafters (see 10.2.1.3.2) **– No. 1 Framing and MSG 6**

(b) Light roof for high wind zone

Rafter size (Width x thickness)	Maximum span of rafters at a maximum spacing (mm) and their fixing types (mm)							
	400		600		900		1200	
	Span	Fixing type	Span	Fixing type	Span	Fixing type	Span	Fixing type
(mm x mm)	(m)		(m)		(m)		(m)	
70 x 35	1.5	A	1.3	A	–	–	–	–
90 x 35	1.9	A	1.7	A	1.4	B	1.3	B
140 x 35	2.7	A	2.4	B	2.1	B	1.8	B
70 x 45	1.6	A	1.4	A	1.2	A	–	–
90 x 45	2.1	A	1.8	A	1.6	B	1.4	B
140 x 45	3.3	B	2.8	B	2.5	B	2.2	B
190 x 45	3.9	B	3.4	B	3.0	B	2.7	B
240 x 45	4.3	B	3.7	B	3.2	B	2.9	B
290 x 45	4.6	B	4.0	B	3.5	B	3.1	B
90 x 70	2.4	A	2.1	B	1.8	B	1.7	B
140 x 70	3.8	B	3.3	B	2.9	B	2.6	B
190 x 70	5.1	B	4.5	B	3.9	B	3.6	B
240 x 70	6.5	B	5.7	B	5.0	B	4.5	C
290 x 70	7.1	B	6.2	B	5.4	C	4.9	C

Fixing type	Fixing to resist uplift	Alternative fixing capacity (kN)
A	2/100 x 3.75 skewed nails	0.7
B	2/100 x 3.75 skewed nails + 1 wire dog	2.7
C	2/100 x 3.75 skewed nails + 2 wire dogs	4.7

NOTE –

(1) Rafter spans may be increased by 10 % for rafters continuous over 2 or more spans that have not been birds mouthed at intermediate supports.

(2) Fixing types for continuous spans shall have double the capacity to that listed in the table.

(3) See table 10.13 for fixing types and capacity.

(4) Members 70 mm thick may be substituted with built-up members sized and nailed in accordance with 2.4.4.7.

Amd 2 May '06

Copyright Standards New Zealand

© The Crown in right of New Zealand, administered by the New Zealand Standards Executive. Access to this standard has been sponsored by the Ministry of Business, Innovation, and Employment under copyright license LN001498. You are not permitted to reproduce or distribute any part of this standard without prior written permission from Standards New Zealand, on behalf of New Zealand Standards Executive, unless your actions are covered by Part 3 of the Copyright Act 1994.

Table 15.6 – Rafters (see 10.2.1.3.2) **– No. 1 Framing and MSG 6**

(c) Light roof for very high wind zone

Rafter size (Width x thickness)	Maximum span of rafters at a maximum spacing (mm) and their fixing types (mm)							
	400		600		900		1200	
	Span	Fixing type	Span	Fixing type	Span	Fixing type	Span	Fixing type
(mm x mm)	(m)		(m)		(m)		(m)	
70 x 35	1.3	A	1.2	A	–	–	–	–
90 x 35	1.7	A	1.5	B	1.3	B	1.2	B
140 x 35	2.5	B	2.2	B	1.9	B	1.7	B
70 x 45	1.5	A	1.3	A	–	–	–	–
90 x 45	1.9	A	1.6	B	1.4	B	1.3	B
140 x 45	3.0	B	2.6	B	2.2	B	2.0	B
190 x 45	3.6	B	3.1	B	2.7	B	2.4	B
240 x 45	3.9	B	3.4	B	2.9	B	2.7	B
290 x 45	4.1	B	3.6	B	3.1	B	2.9	C
90 x 70	2.2	A	1.9	B	1.7	B	1.5	B
140 x 70	3.4	B	3.0	B	2.6	B	2.4	B
190 x 70	4.7	B	4.1	B	3.6	B	3.2	C
240 x 70	5.9	B	5.2	B	4.5	C	4.1	C
290 x 70	6.5	B	5.6	B	4.9	C	4.4	C

Fixing type	Fixing to resist uplift	Alternative fixing capacity (kN)
A	2/100 x 3.75 skewed nails	0.7
B	2/100 x 3.75 skewed nails + 1 wire dog	2.7
C	2/100 x 3.75 skewed nails + 2 wire dogs	4.7

NOTE –

(1) Rafter spans may be increased by 10 % for rafters continuous over 2 or more spans that have not been birds mouthed at intermediate supports.

(2) Fixing types for continuous spans shall have double the capacity to that listed in the table.

(3) See table 10.13 for fixing types and capacity. Fixings suitable for high and very high wind zones.

(4) Members 70 mm thick may be substituted with built-up members sized and nailed in accordance with 2.4.4.7.

Amd 2 May '06

Copyright Standards New Zealand

© The Crown in right of New Zealand, administered by the New Zealand Standards Executive. Access to this standard has been sponsored by the Ministry of Business, Innovation, and Employment under copyright license LN001498. You are not permitted to reproduce or distribute any part of this standard without prior written permission from Standards New Zealand, on behalf of New Zealand Standards Executive, unless your actions are covered by Part 3 of the Copyright Act 1994.

Table 15.6 – Rafters (see 10.2.1.3.2) **– No. 1 Framing and MSG 6**

(d) Heavy roof for low and medium wind zone

Rafter size (Width x thickness)	Maximum span of rafters at a maximum spacing (mm) and their fixing types (mm)							
	400		480		600		900	
	Span	Fixing type	Span	Fixing type	Span	Fixing type	Span	Fixing type
(mm x mm)	(m)		(m)		(m)		(m)	
70 x 35	1.2	A	1.1	A	1.0	A	0.9	A
90 x 35	1.5	A	1.4	A	1.3	A	1.1	A
140 x 35	2.3	A	2.2	A	2.0	A	1.8	A
70 x 45	1.3	A	1.2	A	1.1	A	0.9	A
90 x 45	1.6	A	1.5	A	1.4	A	1.2	A
140 x 45	2.6	A	2.4	A	2.2	A	1.9	A
190 x 45	3.5	A	3.3	A	3.0	A	2.6	A
240 x 45	4.4	A	4.2	A	3.8	A	3.4	B
290 x 45	5.3	A	5.0	A	4.7	B	4.1	B
90 x 70	1.9	A	1.8	A	1.6	A	1.4	A
140 x 70	3.0	A	2.8	B	2.6	A	2.3	A
190 x 70	4.0	A	3.8	A	3.5	A	3.1	B
240 x 70	5.1	A	4.8	A	4.5	B	3.9	B
290 x 70	6.2	A	5.8	B	5.4	B	4.7	B

Fixing type	Fixing to resist uplift	Alternative fixing capacity (kN)
A	2/100 x 3.75 skewed nails	0.7
B	2/100 x 3.75 skewed nails + 1 wire dog	2.7

NOTE –

(1) Rafter spans may be increased by 10 % for rafters continuous over 2 or more spans that have not been birds mouthed at intermediate supports.

(2) Fixing types for continuous spans shall have double the capacity to that listed in the table.

(3) See table 10.13 for fixing types and capacity. Fixings suitable for low and medium wind zones.

(4) Members 70 mm thick may be substituted with built-up members sized and nailed in accordance with 2.4.4.7.

Amd 2 May '06

Copyright Standards New Zealand

© The Crown in right of New Zealand, administered by the New Zealand Standards Executive. Access to this standard has been sponsored by the Ministry of Business, Innovation, and Employment under copyright license LN001498. You are not permitted to reproduce or distribute any part of this standard without prior written permission from Standards New Zealand, on behalf of New Zealand Standards Executive, unless your actions are covered by Part 3 of the Copyright Act 1994.

Table 15.6 – Rafters (see 10.2.1.3.2) **– No. 1 Framing and MSG 6**

(e) Heavy roof for high and very high wind zone

Rafter size (Width x thickness)	Maximum span of rafters at a maximum spacing (mm) and their fixing types (mm)							
	400		480		600		900	
	Span	Fixing type	Span	Fixing type	Span	Fixing type	Span	Fixing type
(mm x mm)	(m)		(m)		(m)		(m)	
70 x 35	1.2	A	–	–	–	–	–	–
90 x 35	1.5	A	1.4	A	1.3	A	–	–
140 x 35	2.3	A	2.2	A	2.0	B	1.8	B
70 x 45	1.3	A	1.2	A	–	–	–	–
90 x 45	1.6	A	1.5	A	1.4	A	1.2	B
140 x 45	2.6	A	2.4	B	2.2	B	1.9	B
190 x 45	3.5	B	3.3	B	3.0	B	2.6	B
240 x 45	4.1	B	3.9	B	3.6	B	3.1	B
290 x 45	5.0	B	4.7	B	4.3	B	3.8	–
90 x 70	1.9	A	1.8	A	1.6	A	1.4	B
140 x 70	3.0	B	2.8	B	2.6	B	2.3	B
190 x 70	4.0	B	3.8	B	3.5	B	3.1	B
240 x 70	5.1	B	4.8	B	4.5	B	3.9	B
290 x 70	6.2	B	5.8	B	5.4	B	4.7	C

Fixing type	Fixing to resist uplift	Alternative fixing capacity (kN)
A	2/100 x 3.75 skewed nails	0.7
B	2/100 x 3.75 skewed nails + 1 wire dog	2.7
C	2/100 x 3.75 skewed nails + 2 wire dogs	4.7

NOTE –

(1) Rafter spans may be increased by 10 % for rafters continuous over 2 or more spans that have not been birds mouthed at intermediate supports.

(2) Fixing types for continuous spans shall have double the capacity to that listed in the table.

(3) See table 10.13 for fixing types and capacity. Fixings suitable for high and very high wind zones.

(4) Members 70 mm thick may be substituted with built-up members sized and nailed in accordance with 2.4.4.7.

Amd 2 May '06

Copyright Standards New Zealand

© The Crown in right of New Zealand, administered by the New Zealand Standards Executive. Access to this standard has been sponsored by the Ministry of Business, Innovation, and Employment under copyright license LN001498. You are not permitted to reproduce or distribute any part of this standard without prior written permission from Standards New Zealand, on behalf of New Zealand Standards Executive, unless your actions are covered by Part 3 of the Copyright Act 1994.

Table 15.6 – Rafters (see 10.2.1.3.2) **– No. 1 Framing and MSG 6**

(f) Dimensions of valley rafters for all wind zones

Rafter size (Width x thickness)	Maximum span of valley rafters (m) and their fixing types for all wind zones			
	Light roof		Heavy roof	
	Span	Fixing type	Span	Fixing type
(mm x mm)	(m)		(m)	
70 x 35	1.2	B	–	–
90 x 35	1.4	B	1.3	B
140 x 35	2.0	B	1.8	B
70 x 45	1.2	B	–	–
90 x 45	1.5	B	1.3	B
140 x 45	2.1	B	1.9	B
190 x 45	2.7	B	2.4	B
240 x 45	3.2	B	2.9	B
290 x 45	3.7	C	3.3	B
90 x 70	1.7	B	1.5	B
140 x 70	2.4	B	2.1	B
190 x 70	3.0	B	2.7	B
240 x 70	3.6	C	3.2	B
290 x 70	4.1	C	3.7	B

Fixing type	Fixing to resist uplift	Alternative fixing capacity (kN)
B	2/100 x 3.75 skewed nails + 1 wire dog	2.7
C	2/100 x 3.75 skewed nails + 2 wire dogs	4.7

NOTE –
(1) For the full range of fixing types and capacity see table 10.13.
(2) Proprietary fixings that have the required fixing capacity indicated in tables may be used.
(3) Members 70 mm thick may be substituted with built-up members sized and nailed in accordance with 2.4.4.7.

Amd 2 May '06

Copyright Standards New Zealand

© The Crown in right of New Zealand, administered by the New Zealand Standards Executive. Access to this standard has been sponsored by the Ministry of Business, Innovation, and Employment under copyright license LN001498. You are not permitted to reproduce or distribute any part of this standard without prior written permission from Standards New Zealand, on behalf of New Zealand Standards Executive, unless your actions are covered by Part 3 of the Copyright Act 1994.

Table 15.6 – Rafters (see 10.2.1.3.2) – VSG 8 and MSG 8

(a) Light roof for low and medium wind zone

Rafter size (Width x thickness)	Maximum span of rafters at a maximum spacing (mm) and their fixing types (mm)							
	400		600		900		1200	
	Span	Fixing type	Span	Fixing type	Span	Fixing type	Span	Fixing type
(mm x mm)	(m)		(m)		(m)		(m)	
70 x 35	1.9	A	1.6	A	1.4	A	1.3	A
90 x 35	2.4	A	2.1	A	1.8	A	1.7	B
140 x 35	3.5	A	3.1	B	2.7	B	2.4	B
70 x 45	2.0	A	1.8	A	1.5	A	1.4	B
90 x 45	2.6	A	2.3	A	2.0	B	1.8	B
140 x 45	4.1	A	3.6	B	3.1	B	2.8	B
190 x 45	5.0	B	4.4	B	3.8	B	3.4	B
240 x 45	5.4	B	4.7	B	4.1	B	3.7	B
290 x 45	5.8	B	5.1	B	4.4	B	4.0	B
90 x 70	3.0	A	2.7	B	2.3	B	2.1	B
140 x 70	4.8	B	4.2	B	3.6	B	3.3	B
190 x 70	6.5	B	5.6	B	4.9	B	4.5	B
240 x 70	8.0	B	7.1	B	6.2	B	5.7	C
290 x 70	9.1	B	7.9	B	6.9	B	6.2	C

Fixing type	Fixing to resist uplift	Alternative fixing capacity (kN)
A	2/100 x 3.75 skewed nails	0.7
B	2/100 x 3.75 skewed nails + 1 wire dog	2.7
C	2/100 x 3.75 skewed nails + 2 wire dogs	4.7

NOTE –

(1) Rafter spans may be increased by 10 % for rafters continuous over 2 or more spans that have not been birds mouthed at intermediate supports.

(2) Fixing types for continuous spans shall have double the capacity to that listed in the table.

(3) See table 10.13 for fixing types and capacity. Fixings suitable for low and medium wind zones.

(4) Members 70 mm thick may be substituted with built-up members sized and nailed in accordance with 2.4.4.7.

Amd 2 May '06

Copyright Standards New Zealand

© The Crown in right of New Zealand, administered by the New Zealand Standards Executive. Access to this standard has been sponsored by the Ministry of Business, Innovation, and Employment under copyright license LN001498. You are not permitted to reproduce or distribute any part of this standard without prior written permission from Standards New Zealand, on behalf of New Zealand Standards Executive, unless your actions are covered by Part 3 of the Copyright Act 1994.

Table 15.6 – Rafters (see 10.2.1.3.2) **– VSG 8 and MSG 8**

(b) Light roof for high wind zone

Rafter size (Width x thickness)	Maximum span of rafters at a maximum spacing (mm) and their fixing types (mm)							
	400		600		900		1200	
	Span	Fixing type	Span	Fixing type	Span	Fixing type	Span	Fixing type
(mm x mm)	(m)		(m)		(m)		(m)	
70 x 35	1.6	A	1.4	A	1.2	A	–	–
90 x 35	2.1	A	1.8	A	1.6	B	1.4	B
140 x 35	3.1	B	2.7	B	2.3	B	2.1	B
70 x 45	1.8	A	1.5	A	1.3	B	1.2	B
90 x 45	2.3	A	2.0	B	1.7	B	1.6	B
140 x 45	3.6	B	3.1	B	2.7	B	2.5	B
190 x 45	4.4	B	3.9	B	3.3	B	3.0	B
240 x 45	4.8	B	4.2	B	3.6	B	3.3	B
290 x 45	5.1	B	4.4	B	3.9	B	3.5	B
90 x 70	2.7	A	2.3	B	2.0	B	1.8	B
140 x 70	4.2	B	3.6	B	3.2	B	2.9	B
190 x 70	5.7	B	5.0	B	4.3	B	3.9	C
240 x 70	7.2	B	6.3	B	5.5	C	5.0	C
290 x 70	8.0	B	6.9	B	6.1	C	5.5	C

Fixing type	Fixing to resist uplift	Alternative fixing capacity (kN)
A	2/100 x 3.75 skewed nails	0.7
B	2/100 x 3.75 skewed nails + 1 wire dog	2.7
C	2/100 x 3.75 skewed nails + 2 wire dogs	4.7

NOTE –

(1) Rafter spans may be increased by 10 % for rafters continuous over 2 or more spans that have not been birds mouthed at intermediate supports.

(2) Fixing types for continuous spans shall have double the capacity to that listed in the table.

(3) See table 10.13 for fixing types and capacity.

(4) Members 70 mm thick may be substituted with built-up members sized and nailed in accordance with 2.4.4.7.

Amd 2 May '06

Copyright Standards New Zealand

© The Crown in right of New Zealand, administered by the New Zealand Standards Executive. Access to this standard has been sponsored by the Ministry of Business, Innovation, and Employment under copyright license LN001498. You are not permitted to reproduce or distribute any part of this standard without prior written permission from Standards New Zealand, on behalf of New Zealand Standards Executive, unless your actions are covered by Part 3 of the Copyright Act 1994.

Table 15.6 – Rafters (see 10.2.1.3.2) **– VSG 8 and MSG 8**

(c) Light roof for very high wind zone

Rafter size (Width x thickness)	Maximum span of rafters at a maximum spacing (mm) and their fixing types (mm)							
	400		600		900		1200	
	Span	Fixing type	Span	Fixing type	Span	Fixing type	Span	Fixing type
(mm x mm)	(m)		(m)		(m)		(m)	
70 x 35	1.5	A	1.3	A	–	–	–	–
90 x 35	1.9	A	1.7	B	1.5	B	1.3	B
140 x 35	2.8	B	2.4	B	2.1	B	1.9	B
70 x 45	1.6	A	1.4	A	1.2	B	–	–
90 x 45	2.1	A	1.8	B	1.6	B	1.4	B
140 x 45	3.3	B	2.9	B	2.5	B	2.3	B
190 x 45	4.0	B	3.5	B	3.0	B	2.7	B
240 x 45	4.4	B	3.8	B	3.3	B	3.0	C
290 x 45	4.7	B	4.1	B	3.5	B	3.2	C
90 x 70	2.4	B	2.1	B	1.8	B	1.7	B
140 x 70	3.8	B	3.3	B	2.9	B	2.6	B
190 x 70	5.2	B	4.5	B	3.9	C	3.6	C
240 x 70	6.5	B	5.7	B	5.0	C	4.5	C
290 x 70	7.3	B	6.3	C	5.5	C	5.0	C

Fixing type	Fixing to resist uplift	Alternative fixing capacity (kN)
A	2/100 x 3.75 skewed nails	0.7
B	2/100 x 3.75 skewed nails + 1 wire dog	2.7
C	2/100 x 3.75 skewed nails + 2 wire dogs	4.7

NOTE –

(1) Rafter spans may be increased by 10 % for rafters continuous over 2 or more spans that have not been birds mouthed at intermediate supports.

(2) Fixing types for continuous spans shall have double the capacity to that listed in the table.

(3) See table 10.13 for fixing types and capacity. Fixings suitable for high and very high wind zones.

(4) Members 70 mm thick may be substituted with built-up members sized and nailed in accordance with 2.4.4.7.

Amd 2 May '06

Copyright Standards New Zealand

© The Crown in right of New Zealand, administered by the New Zealand Standards Executive. Access to this standard has been sponsored by the Ministry of Business, Innovation, and Employment under copyright license LN001498. You are not permitted to reproduce or distribute any part of this standard without prior written permission from Standards New Zealand, on behalf of New Zealand Standards Executive, unless your actions are covered by Part 3 of the Copyright Act 1994.

Table 15.6 – Rafters (see 10.2.1.3.2) **– VSG 8 and MSG 8**

(d) Heavy roof for low and medium wind zone

Rafter size (Width x thickness)	Maximum span of rafters at a maximum spacing (mm) and their fixing types (mm)							
	400		480		600		900	
	Span	Fixing type	Span	Fixing type	Span	Fixing type	Span	Fixing type
(mm x mm)	(m)		(m)		(m)		(m)	
70 x 35	1.3	A	1.2	A	1.1	A	1.0	A
90 x 35	1.7	A	1.6	A	1.4	A	1.3	A
140 x 35	2.6	A	2.4	A	2.3	A	2.0	A
70 x 45	1.4	A	1.3	A	1.2	A	1.1	A
90 x 45	1.8	A	1.7	A	1.6	A	1.4	A
140 x 45	2.8	A	2.7	A	2.5	A	2.1	A
190 x 45	3.9	A	3.6	A	3.4	A	2.9	B
240 x 45	4.9	A	4.6	A	4.3	B	3.7	B
290 x 45	5.9	A	5.6	B	5.2	B	4.5	B
90 x 70	2.1	A	2.0	A	1.8	A	1.6	A
140 x 70	3.3	A	3.1	A	2.9	A	2.5	A
190 x 70	4.5	A	4.2	A	3.9	A	3.4	B
240 x 70	5.7	A	5.3	B	4.9	B	4.3	B
290 x 70	6.9	B	6.4	B	6.0	B	5.2	B

Fixing type	Fixing to resist uplift	Alternative fixing capacity (kN)
A	2/100 x 3.75 skewed nails	0.7
B	2/100 x 3.75 skewed nails + 1 wire dog	2.7

NOTE –

(1) Rafter spans may be increased by 10 % for rafters continuous over 2 or more spans that have not been birds mouthed at intermediate supports.

(2) Fixing types for continuous spans shall have double the capacity to that listed in the table.

(3) See table 10.13 for fixing types and capacity. Fixings suitable for low and medium wind zones.

(4) Members 70 mm thick may be substituted with built-up members sized and nailed in accordance with 2.4.4.7. Amd 2 May '06

Copyright Standards New Zealand

© The Crown in right of New Zealand, administered by the New Zealand Standards Executive. Access to this standard has been sponsored by the Ministry of Business, Innovation, and Employment under copyright license LN001498. You are not permitted to reproduce or distribute any part of this standard without prior written permission from Standards New Zealand, on behalf of New Zealand Standards Executive, unless your actions are covered by Part 3 of the Copyright Act 1994.

Table 15.6 – Rafters (see 10.2.1.3.2) **– VSG 8 and MSG 8**

(e) Heavy roof for high and very high wind zone

Rafter size (Width x thickness)	Maximum span of rafters at a maximum spacing (mm) and their fixing types (mm)							
	400		480		600		900	
	Span	Fixing type	Span	Fixing type	Span	Fixing type	Span	Fixing type
(mm x mm)	(m)		(m)		(m)		(m)	
70 x 35	1.3	A	1.2	A	–	–	–	–
90 x 35	1.7	A	1.6	A	1.4	A	1.3	B
140 x 35	2.6	A	2.4	B	2.3	B	2.0	B
70 x 45	1.4	A	1.3	A	1.2	A	–	–
90 x 45	1.8	A	1.7	A	1.6	A	1.4	B
140 x 45	2.8	B	2.7	B	2.5	B	2.1	B
190 x 45	3.9	B	3.6	B	3.4	B	2.9	B
240 x 45	4.7	B	4.4	B	4.1	B	3.5	B
290 x 45	5.6	B	5.2	B	4.9	B	4.2	B
90 x 70	2.1	A	2.0	A	1.8	B	1.6	B
140 x 70	3.3	B	3.1	B	2.9	B	2.5	B
190 x 70	4.5	B	4.2	B	3.9	B	3.4	B
240 x 70	5.7	B	5.3	B	4.9	B	4.3	B
290 x 70	6.9	B	6.4	B	6.0	B	5.2	C

Fixing type	Fixing to resist uplift	Alternative fixing capacity (kN)
A	2/100 x 3.75 skewed nails	0.7
B	2/100 x 3.75 skewed nails + 1 wire dog	2.7
C	2/100 x 3.75 skewed nails + 2 wire dogs	4.7

NOTE –

(1) Rafter spans may be increased by 10 % for rafters continuous over 2 or more spans that have not been birds mouthed at intermediate supports.

(2) Fixing types for continuous spans shall have double the capacity to that listed in the table.

(3) See table 10.13 for fixing types and capacity.

(4) Members 70 mm thick may be substituted with built-up members sized and nailed in accordance with 2.4.4.7.

Amd 2 May '06

Copyright Standards New Zealand

© The Crown in right of New Zealand, administered by the New Zealand Standards Executive. Access to this standard has been sponsored by the Ministry of Business, Innovation, and Employment under copyright license LN001498. You are not permitted to reproduce or distribute any part of this standard without prior written permission from Standards New Zealand, on behalf of New Zealand Standards Executive, unless your actions are covered by Part 3 of the Copyright Act 1994.

Table 15.6 – Rafters (see 10.2.1.3.2) **– VSG 8 and MSG 8**

(f) Dimensions of valley rafters for all wind zones

Rafter size (Width x thickness)	Maximum span of valley rafters (m) and their fixing types for all wind zones			
	Light roof		Heavy roof	
	Span	Fixing type	Span	Fixing type
(mm x mm)	(m)		(m)	
70 x 35	1.3	B	–	–
90 x 35	1.5	B	1.4	B
140 x 35	2.1	B	1.9	B
70 x 45	1.3	B	1.2	B
90 x 45	1.6	B	1.5	B
140 x 45	2.3	B	2.0	B
190 x 45	2.9	B	2.6	B
240 x 45	3.4	C	3.1	B
290 x 45	4.0	C	3.6	B
90 x 70	1.8	B	1.6	B
140 x 70	2.5	B	2.3	B
190 x 70	3.2	B	2.9	B
240 x 70	3.8	C	3.4	B
290 x 70	4.4	C	4.0	B

Fixing type	Fixing to resist uplift	Alternative fixing capacity (kN)
B	2/100 x 3.75 skewed nails + 1 wire dog	2.7
C	2/100 x 3.75 skewed nails + 2 wire dogs	4.7

NOTE –

(1) For the full range of fixing types and capacity see table 10.13.

(2) Proprietary fixings that have the required fixing capacity indicated in tables may be used.

(3) Members 70 mm thick may be substituted with built-up members sized and nailed in accordance with 2.4.4.7.

Amd 2 May '06

Copyright Standards New Zealand

© The Crown in right of New Zealand, administered by the New Zealand Standards Executive. Access to this standard has been sponsored by the Ministry of Business, Innovation, and Employment under copyright license LN001498. You are not permitted to reproduce or distribute any part of this standard without prior written permission from Standards New Zealand, on behalf of New Zealand Standards Executive, unless your actions are covered by Part 3 of the Copyright Act 1994.

Table 15.6 – Rafters (see 10.2.1.3.2) **– VSG 10 and MSG 10**

(a) Light roof for low and medium wind zone

Rafter size (Width x thickness)	Maximum span of rafters at a maximum spacing (mm) and their fixing types (mm)							
	400		600		900		1200	
	Span	Fixing type	Span	Fixing type	Span	Fixing type	Span	Fixing type
(mm x mm)	(m)		(m)		(m)		(m)	
70 x 35	2.0	A	1.7	A	1.5	A	1.4	A
90 x 35	2.6	A	2.3	A	2.0	B	1.8	B
140 x 35	4.0	A	3.5	B	3.0	B	2.7	B
70 x 45	2.2	A	1.9	A	1.7	A	1.5	B
90 x 45	2.8	A	2.5	A	2.1	B	1.9	B
140 x 45	4.4	B	3.8	B	3.4	B	3.0	B
190 x 45	5.7	B	4.9	B	4.3	B	3.9	B
240 x 45	6.1	B	5.4	B	4.7	B	4.2	B
290 x 45	6.6	B	5.7	B	5.0	B	4.5	B
90 x 70	3.3	A	2.9	B	2.5	B	2.3	B
140 x 70	5.1	B	4.5	B	3.9	B	3.5	B
190 x 70	7.0	B	6.1	B	5.3	B	4.8	B
240 x 70	8.4	B	7.6	B	6.7	B	6.1	C
290 x 70	9.7	B	8.8	B	7.8	C	7.0	C

Fixing type	Fixing to resist uplift	Alternative fixing capacity (kN)
A	2/100 x 3.75 skewed nails	0.7
B	2/100 x 3.75 skewed nails + 1 wire dog	2.7
C	2/100 x 3.75 skewed nails + 2 wire dogs	4.7

NOTE –

(1) Rafter spans may be increased by 10 % for rafters continuous over 2 or more spans that have not been birds mouthed at intermediate supports.

(2) Fixing types for continuous spans shall have double the capacity to that listed in the table.

(3) See table 10.13 for fixing types and capacity. Fixings suitable for low and medium wind zones.

(4) Members 70 mm thick may be substituted with built-up members sized and nailed in accordance with 2.4.4.7.

Amd 2 May '06

Copyright Standards New Zealand

© The Crown in right of New Zealand, administered by the New Zealand Standards Executive. Access to this standard has been sponsored by the Ministry of Business, Innovation, and Employment under copyright license LN001498. You are not permitted to reproduce or distribute any part of this standard without prior written permission from Standards New Zealand, on behalf of New Zealand Standards Executive, unless your actions are covered by Part 3 of the Copyright Act 1994.

Table 15.6 – Rafters (see 10.2.1.3.2) **– VSG 10 and MSG 10**

(b) Light roof for high wind zone

Rafter size (Width x thickness)	Maximum span of rafters at a maximum spacing (mm) and their fixing types (mm)							
	400		600		900		1200	
	Span	Fixing type	Span	Fixing type	Span	Fixing type	Span	Fixing type
(mm x mm)	(m)		(m)		(m)		(m)	
70 x 35	1.8	A	1.5	A	1.3	B	1.2	B
90 x 35	2.3	A	2.0	B	1.7	B	1.6	B
140 x 35	3.5	B	3.0	B	2.6	B	2.4	B
70 x 45	1.9	A	1.7	A	1.4	B	1.3	B
90 x 45	2.5	A	2.2	B	1.9	B	1.7	B
140 x 45	3.9	B	3.4	B	2.9	B	2.7	B
190 x 45	5.0	B	4.4	B	3.8	B	3.4	B
240 x 45	5.4	B	4.7	B	4.1	B	3.7	B
290 x 45	5.8	B	5.0	B	4.4	B	4.0	C
90 x 70	2.9	A	2.5	B	2.3	B	2.0	B
140 x 70	4.5	B	3.9	B	3.4	B	3.1	B
190 x 70	6.1	B	5.3	B	4.7	B	4.2	C
240 x 70	7.7	B	6.7	B	5.9	C	5.3	C
290 x 70	8.8	B	7.8	C	6.8	C	6.2	C

Fixing type	Fixing to resist uplift	Alternative fixing capacity (kN)
A	2/100 x 3.75 skewed nails	0.7
B	2/100 x 3.75 skewed nails + 1 wire dog	2.7
C	2/100 x 3.75 skewed nails + 2 wire dogs	4.7

NOTE –

(1) Rafter spans may be increased by 10 % for rafters continuous over 2 or more spans that have not been birds mouthed at intermediate supports.

(2) Fixing types for continuous spans shall have double the capacity to that listed in the table.

(3) See table 10.13 for fixing types and capacity.

(4) Members 70 mm thick may be substituted with built-up members sized and nailed in accordance with 2.4.4.7.

Amd 2 May '06

Copyright Standards New Zealand

© The Crown in right of New Zealand, administered by the New Zealand Standards Executive. Access to this standard has been sponsored by the Ministry of Business, Innovation, and Employment under copyright license LN001498. You are not permitted to reproduce or distribute any part of this standard without prior written permission from Standards New Zealand, on behalf of New Zealand Standards Executive, unless your actions are covered by Part 3 of the Copyright Act 1994.

Table 15.6 – Rafters (see 10.2.1.3.2) **– VSG 10 and MSG 10**

(c) Light roof for very high wind zone

Rafter size (Width x thickness)	Maximum span of rafters at a maximum spacing (mm) and their fixing types (mm)							
	400		600		900		1200	
	Span	Fixing type	Span	Fixing type	Span	Fixing type	Span	Fixing type
(mm x mm)	(m)		(m)		(m)		(m)	
70 x 35	1.6	A	1.4	A	1.2	B	–	–
90 x 35	2.1	A	1.8	B	1.6	B	1.4	B
140 x 35	3.2	B	2.8	B	2.4	B	2.2	B
70 x 45	1.7	A	1.5	B	1.3	B	1.2	B
90 x 45	2.2	B	2.0	B	1.7	B	1.5	B
140 x 45	3.5	B	3.1	B	2.7	B	2.4	B
190 x 45	4.6	B	4.0	B	3.4	B	3.1	C
240 x 45	4.9	B	4.3	B	3.7	B	3.4	C
290 x 45	5.3	B	4.6	B	4.0	C	3.6	C
90 x 70	2.6	B	2.3	B	2.0	B	1.8	B
140 x 70	4.1	B	3.6	B	3.1	B	2.8	C
190 x 70	5.6	B	4.8	B	4.2	C	3.8	C
240 x 70	7.6	B	6.1	C	5.4	C	4.9	C
290 x 70	8.2	B	7.1	C	6.2	C	5.6	D

Fixing type	Fixing to resist uplift	Alternative fixing capacity (kN)
A	2/100 x 3.75 skewed nails	0.7
B	2/100 x 3.75 skewed nails + 1 wire dog	2.7
C	2/100 x 3.75 skewed nails + 2 wire dogs	4.7
D	2/100 x 3.75 skewed nails + 3 wire dogs	6.7

NOTE –

(1) Rafter spans may be increased by 10 % for rafters continuous over 2 or more spans that have not been birds mouthed at intermediate supports.

(2) Fixing types for continuous spans shall have double the capacity to that listed in the table.

(3) See table 10.13 for fixing types and capacity. Fixings suitable for high and very high wind zones.

(4) Members 70 mm thick may be substituted with built-up members sized and nailed in accordance with 2.4.4.7.

Amd 2 May '06

Copyright Standards New Zealand

© The Crown in right of New Zealand, administered by the New Zealand Standards Executive. Access to this standard has been sponsored by the Ministry of Business, Innovation, and Employment under copyright license LN001498. You are not permitted to reproduce or distribute any part of this standard without prior written permission from Standards New Zealand, on behalf of New Zealand Standards Executive, unless your actions are covered by Part 3 of the Copyright Act 1994.

Table 15.6 – Rafters (see 10.2.1.3.2) **– VSG 10 and MSG 10**

(d) Heavy roof for low and medium wind zone

Rafter size (Width x thickness)	Maximum span of rafters at a maximum spacing (mm) and their fixing types (mm)							
	400		480		600		900	
	Span	Fixing type	Span	Fixing type	Span	Fixing type	Span	Fixing type
(mm x mm)	(m)		(m)		(m)		(m)	
70 x 35	1.4	A	1.3	A	1.2	A	1.0	A
90 x 35	1.8	A	1.7	A	1.6	A	1.3	A
140 x 35	2.4	A	2.6	A	2.4	A	2.1	A
70 x 45	1.5	A	1.4	A	1.3	A	1.1	A
90 x 45	1.9	A	1.8	A	1.7	A	1.5	A
140 x 45	3.0	A	2.9	A	2.7	A	2.3	A
190 x 45	4.1	A	3.9	A	3.6	A	3.2	B
240 x 45	5.2	A	4.9	A	4.6	B	4.0	B
290 x 45	6.4	A	6.0	B	5.5	B	4.8	B
90 x 70	2.3	A	2.1	A	2.0	A	1.7	A
140 x 70	3.5	A	3.3	A	3.1	A	2.7	A
190 x 70	4.8	A	4.5	A	4.2	A	3.7	B
240 x 70	6.1	A	5.7	B	5.3	B	4.6	B
290 x 70	7.4	B	6.9	B	6.4	B	5.6	B

Fixing type	Fixing to resist uplift	Alternative fixing capacity (kN)
A	2/100 x 3.75 skewed nails	0.7
B	2/100 x 3.75 skewed nails + 1 wire dog	2.7

NOTE –

(1) Rafter spans may be increased by 10 % for rafters continuous over 2 or more spans that have not been birds mouthed at intermediate supports.

(2) Fixing types for continuous spans shall have double the capacity to that listed in the table.

(3) See table 10.13 for fixing types and capacity. Fixings suitable for low and medium wind zones.

(4) Members 70 mm thick may be substituted with built-up members sized and nailed in accordance with 2.4.4.7.

Amd 2 May '06

Copyright Standards New Zealand

Table 15.6 – Rafters (see 10.2.1.3.2) **– VSG 10 and MSG 10**

(e) Heavy roof for high and very high wind zone

Rafter size (Width x thickness)	Maximum span of rafters at a maximum spacing (mm) and their fixing types (mm)							
	400		480		600		900	
	Span	Fixing type	Span	Fixing type	Span	Fixing type	Span	Fixing type
(mm x mm)	(m)		(m)		(m)		(m)	
70 x 35	1.4	A	1.3	A	1.2	A	–	–
90 x 35	1.8	A	1.7	A	1.6	A	1.3	B
140 x 35	2.8	B	2.6	B	2.4	B	2.1	B
70 x 45	1.5	A	1.4	A	1.3	A	1.1	A
90 x 45	1.9	A	1.8	A	1.7	A	1.5	B
140 x 45	3.0	B	2.9	B	2.7	B	2.3	B
190 x 45	4.1	B	3.9	B	3.6	B	3.2	B
240 x 45	5.2	B	4.9	B	4.6	B	4.0	B
290 x 45	6.3	B	5.9	B	5.5	B	4.8	B
90 x 70	2.3	A	2.1	A	2.0	B	1.7	B
140 x 70	3.5	B	3.3	B	3.1	B	2.7	B
190 x 70	4.8	B	4.5	B	4.2	B	3.7	B
240 x 70	6.1	B	5.7	B	5.3	B	4.6	C
290 x 70	7.4	A	6.9	A	6.4	A	5.6	C

Fixing type	Fixing to resist uplift	Alternative fixing capacity (kN)
A	2/100 x 3.75 skewed nails	0.7
B	2/100 x 3.75 skewed nails + 1 wire dog	2.7
C	2/100 x 3.75 skewed nails + 2 wire dogs	4.7

NOTE –

(1) Rafter spans may be increased by 10 % for rafters continuous over 2 or more spans that have not been birds mouthed at intermediate supports.

(2) Fixing types for continuous spans shall have double the capacity to that listed in the table.

(3) See table 10.13 for fixing types and capacity.

(4) Members 70 mm thick may be substituted with built-up members sized and nailed in accordance with 2.4.4.7.

Amd 2 May '06

© The Crown in right of New Zealand, administered by the New Zealand Standards Executive. Access to this standard has been sponsored by the Ministry of Business, Innovation, and Employment under copyright license LN001498. You are not permitted to reproduce or distribute any part of this standard without prior written permission from Standards New Zealand, on behalf of New Zealand Standards Executive, unless your actions are covered by Part 3 of the Copyright Act 1994.

Copyright Standards New Zealand

© The Crown in right of New Zealand, administered by the New Zealand Standards Executive. Access to this standard has been sponsored by the Ministry of Business, Innovation, and Employment under copyright license LN001498. You are not permitted to reproduce or distribute any part of this standard without prior written permission from Standards New Zealand, on behalf of New Zealand Standards Executive, unless your actions are covered by Part 3 of the Copyright Act 1994.

Table 15.6 – Rafters (see 10.2.1.3.2) **– VSG 10 and MSG 10**

(f) Dimensions of valley rafters for all wind zones

Rafter size (Width x thickness)	Maximum span of valley rafters (m) and their fixing types for all wind zones			
	Light roof		Heavy roof	
	Span	Fixing type	Span	Fixing type
(mm x mm)	(m)		(m)	
70 x 35	1.3	B	1.2	B
90 x 35	1.6	B	1.4	B
140 x 35	2.3	B	2.0	B
70 x 45	1.4	B	1.3	B
90 x 45	1.7	B	1.5	B
140 x 45	2.4	B	2.2	B
190 x 45	3.0	B	2.7	B
240 x 45	3.6	C	3.3	B
290 x 45	4.2	C	3.8	B
90 x 70	1.9	B	1.7	B
140 x 70	2.7	B	2.4	B
190 x 70	3.4	B	3.0	B
240 x 70	4.1	C	3.6	B
290 x 70	4.7	C	4.2	C

Fixing type	Fixing to resist uplift	Alternative fixing capacity (kN)
B	2/100 x 3.75 skewed nails + 1 wire dog	2.7
C	2/100 x 3.75 skewed nails + 2 wire dogs	4.7

NOTE –

(1) For the full range of fixing types and capacity see table 10.13.

(2) Proprietary fixings that have the required fixing capacity indicated in tables may be used.

(3) Members 70 mm thick may be substituted with built-up members sized and nailed in accordance with 2.4.4.7.

Amd 2 May '06

Copyright Standards New Zealand

© The Crown in right of New Zealand, administered by the New Zealand Standards Executive. Access to this standard has been sponsored by the Ministry of Business, Innovation, and Employment under copyright license LN001498. You are not permitted to reproduce or distribute any part of this standard without prior written permission from Standards New Zealand, on behalf of New Zealand Standards Executive, unless your actions are covered by Part 3 of the Copyright Act 1994.

Table 15.7 – Underpurlins and ridge beams (see 10.2.1.9.1) **– No. 1 Framing and MSG 6**

(a) Light roof for low, medium, high and very high wind speed

Underpurlin or ridge beam size (Width x thickness)	Loaded dimension* of underpurlin or ridge beam (m)							
	1.8		2.7		3.6		4.2	
	Span	Fixing type	Span	Fixing type	Span	Fixing type	Span	Fixing type
(mm x mm)	(m)		(m)		(m)		(m)	
140 x 45	1.6	C	1.3	C	–	–	–	–
190 x 45	1.9	C	1.6	C	1.4	D	1.3	D
240 x 45	2.2	C	1.9	D	1.7	D	1.6	D
290 x 45	2.3	C	2.0	D	1.8	D	1.7	E
90 x 70	1.2	B	–	–	–	–	–	–
140 x 70	1.9	C	1.6	C	1.4	D	1.3	D
190 x 70	2.7	C	2.2	D	1.9	D	1.8	E
240 x 70	4.2	E	3.6	F	3.2	F	3.0	F
290 x 70	4.6	E	4.0	F	3.6	F	3.3	F
190 x 90	3.7	D	3.2	E	2.9	F	2.7	F
240 x 90	4.6	E	4.0	F	3.7	F	3.5	F
290 x 90	5.6	F	4.9	F	4.4	F	–	–

* For definition of loaded dimension see 1.3.

Fixing type	Fixing to resist uplift for underpurlins (For ridge beams refer to table 10.3 and figure 10.7)	Alternative fixing capacity (kN)
B	2/100 x 3.75 skewed nails + 1 wire dog	2.7
C	2/100 x 3.75 skewed nails + 2 wire dogs	4.7
D	2/100 x 3.75 skewed nails + 3 wire dogs	6.7
E	2/100 x 3.75 skewed nails + 4 wire dogs	8.7
F	2/100 x 3.75 skewed nails + U strap of 27 mm x 1.2 mm 10/30 x 3.15 nails at each end	16.0

NOTE –

(1) Spans may be increased by 10 % for underpurlins over 2 or more spans.

(2) Fixing types for continuous spans shall have double the capacity to that listed in the table.

(3) Members 70 mm and 90 mm thick may be substituted with built-up members sized and nailed in accordance with 2.4.4.7.

Amd 2 May '06

Copyright Standards New Zealand

© The Crown in right of New Zealand, administered by the New Zealand Standards Executive. Access to this standard has been sponsored by the Ministry of Business, Innovation, and Employment under copyright license LN001498. You are not permitted to reproduce or distribute any part of this standard without prior written permission from Standards New Zealand, on behalf of New Zealand Standards Executive, unless your actions are covered by Part 3 of the Copyright Act 1994.

Table 15.7 – Underpurlins and ridge beams (see 10.2.1.9.1) **– No. 1 Framing and MSG 6**

(b) Heavy roof for low, medium, high and very high wind zone

Underpurlin or ridge beam size (Width x thickness)	Loaded dimension* of underpurlin or ridge beam (m)							
	1.8		2.7		3.6		4.2	
	Span	Fixing type	Span	Fixing type	Span	Fixing type	Span	Fixing type
(mm x mm)	(m)		(m)		(m)		(m)	
140 x 45	1.3	B	–	–	–	–	–	–
190 x 45	1.7	B	1.4	C	1.2	C	–	–
240 x 45	2.1	C	1.7	C	1.5	C	1.4	C
290 x 45	2.3	C	2.0	C	1.7	D	1.6	D
140 x 70	1.5	B	1.3	C	–	–	–	–
190 x 70	2.1	C	1.8	C	1.6	C	1.4	D
240 x 70	3.3	C	2.9	D	2.6	E	2.5	E
290 x 70	4.0	D	3.5	E	3.2	F	3.0	F
190 x 90	2.8	C	2.5	D	2.2	D	2.1	E
240 x 90	3.6	D	3.1	D	2.8	E	2.7	F
290 x 90	4.3	D	3.8	E	3.4	F	3.3	F

* For definition of loaded dimension see 1.3.

Fixing type	Fixing to resist uplift for underpurlins (For ridge beams refer to table 10.3 and figure 10.7)	Alternative fixing capacity (kN)
B	2/100 x 3.75 skewed nails + 1 wire dog	2.7
C	2/100 x 3.75 skewed nails + 2 wire dogs	4.7
D	2/100 x 3.75 skewed nails + 3 wire dogs	6.7
E	2/100 x 3.75 skewed nails + 4 wire dogs	8.7
F	2/100 x 3.75 skewed nails + U strap of 27 mm x 1.2 mm 10/30 x 3.15 nails at each end	16.0

NOTE –

(1) Spans may be increased by 10 % for underpurlins over 2 or more spans.

(2) Fixing types for continuous spans shall have double the capacity to that listed in the table.

(3) Members 70 mm and 90 mm thick may be substituted with built-up members sized and nailed in accordance with 2.4.4.7.

Amd 2 May '06

Copyright Standards New Zealand

© The Crown in right of New Zealand, administered by the New Zealand Standards Executive. Access to this standard has been sponsored by the Ministry of Business, Innovation, and Employment under copyright license LN001498. You are not permitted to reproduce or distribute any part of this standard without prior written permission from Standards New Zealand, on behalf of New Zealand Standards Executive, unless your actions are covered by Part 3 of the Copyright Act 1994.

Table 15.7 – Underpurlins and ridge beams (see 10.2.1.9.1) **– VSG 8 and MSG 8**

(a) Light roof for low, medium, high and very high wind speed

Underpurlin or ridge beam size (Width x thickness)	Loaded dimension* of underpurlin or ridge beam (m)							
	1.8		2.7		3.6		4.2	
	Span	Fixing type	Span	Fixing type	Span	Fixing type	Span	Fixing type
(mm x mm)	(m)		(m)		(m)		(m)	
90 x 45	1.2	B	–	–	–	–	–	–
140 x 45	1.8	C	1.5	C	1.3	C	1.2	D
190 x 45	2.2	C	1.9	D	1.7	D	1.6	D
240 x 45	2.4	C	2.1	D	1.9	D	1.8	E
290 x 45	2.6	C	2.3	D	2.0	E	1.9	E
90 x 70	1.4	B	1.2	C	–	–	–	–
140 x 70	2.2	C	1.9	D	1.7	D	1.5	D
190 x 70	2.9	D	2.6	D	2.3	E	2.1	E
240 x 70	4.7	E	4.1	F	3.7	F	3.4	F
290 x 70	5.1	F	4.5	F	4.0	F	3.8	F
190 x 90	4.0	E	3.5	F	3.2	F	3.0	F
240 x 90	5.1	F	4.5	F	4.1	F	3.9	F
290 x 90	6.2	F	5.4	F	–	–	–	–

* For definition of loaded dimension see 1.3.

Fixing type	Fixing to resist uplift for underpurlins (For ridge beams refer to table 10.3 and figure 10.7)	Alternative fixing capacity (kN)
B	2/100 x 3.75 skewed nails + 1 wire dog	2.7
C	2/100 x 3.75 skewed nails + 2 wire dogs	4.7
D	2/100 x 3.75 skewed nails + 3 wire dogs	6.7
E	2/100 x 3.75 skewed nails + 4 wire dogs	8.7
F	2/100 x 3.75 skewed nails + U strap of 27 mm x 1.2 mm 10/30 x 3.15 nails at each end	16.0

NOTE –

(1) Spans may be increased by 10 % for underpurlins over 2 or more spans.

(2) Fixing types for continuous spans shall have double the capacity to that listed in the table.

(3) Members 70 mm and 90 mm thick may be substituted with built-up members sized and nailed in accordance with 2.4.4.7.

Amd 2 May '06

Copyright Standards New Zealand

© The Crown in right of New Zealand, administered by the New Zealand Standards Executive. Access to this standard has been sponsored by the Ministry of Business, Innovation, and Employment under copyright license LN001498. You are not permitted to reproduce or distribute any part of this standard without prior written permission from Standards New Zealand, on behalf of New Zealand Standards Executive, unless your actions are covered by Part 3 of the Copyright Act 1994.

Table 15.7 – Underpurlins and ridge beams (see 10.2.1.9.1) **– VSG 8 and MSG 8**

(b) Heavy roof for low, medium, high and very high wind zone

Underpurlin or ridge beam size (Width x thickness)	Loaded dimension* of underpurlin or ridge beam (m)							
	1.8		2.7		3.6		4.2	
	Span	Fixing type	Span	Fixing type	Span	Fixing type	Span	Fixing type
(mm x mm)	(m)		(m)		(m)		(m)	
140 x 45	1.4	B	1.2	B	–	–	–	–
190 x 45	2.0	C	1.7	C	1.4	C	1.3	C
240 x 45	2.4	C	2.0	C	1.7	D	1.6	D
290 x 45	2.6	C	2.3	D	2.0	D	1.9	D
140 x 70	1.7	B	1.4	C	1.3	C	1.2	C
190 x 70	2.3	C	2.0	C	1.8	D	1.7	D
240 x 70	3.6	D	3.2	D	2.9	E	2.7	F
290 x 70	4.4	D	3.8	E	3.5	F	3.3	F
190 x 90	3.1	C	2.7	D	2.5	E	2.3	E
240 x 90	4.0	D	3.5	E	3.1	F	3.0	F
290 x 90	4.8	E	4.2	F	3.8	F	3.6	F

* For definition of loaded dimension see 1.3.

Fixing type	Fixing to resist uplift for underpurlins (For ridge beams refer to table 10.3 and figure 10.7)	Alternative fixing capacity (kN)
B	2/100 x 3.75 skewed nails + 1 wire dog	2.7
C	2/100 x 3.75 skewed nails + 2 wire dogs	4.7
D	2/100 x 3.75 skewed nails + 3 wire dogs	6.7
E	2/100 x 3.75 skewed nails + 4 wire dogs	8.7
F	2/100 x 3.75 skewed nails + U strap of 27 mm x 1.2 mm 10/30 x 3.15 nails at each end	16.0

NOTE –

(1) Spans may be increased by 10 % for underpurlins over 2 or more spans.

(2) Fixing types for continuous spans shall have double the capacity to that listed in the table.

(3) Members 70 mm and 90 mm thick may be substituted with built-up members sized and nailed in accordance with 2.4.4.7.

Amd 2 May '06

Copyright Standards New Zealand

© The Crown in right of New Zealand, administered by the New Zealand Standards Executive. Access to this standard has been sponsored by the Ministry of Business, Innovation, and Employment under copyright license LN001498. You are not permitted to reproduce or distribute any part of this standard without prior written permission from Standards New Zealand, on behalf of New Zealand Standards Executive, unless your actions are covered by Part 3 of the Copyright Act 1994.

Table 15.7 – Underpurlins and ridge beams (see 10.2.1.9.1) **– VSG 10 and MSG 10**

(a) Light roof for low, medium, high and very high wind speed

Underpurlin or ridge beam size (Width x thickness)	Loaded dimension* of underpurlin or ridge beam (m)							
	1.8		2.7		3.6		4.2	
	Span	Fixing type	Span	Fixing type	Span	Fixing type	Span	Fixing type
(mm x mm)	(m)		(m)		(m)		(m)	
90 x 45	1.3	B	–	–	–	–	–	–
140 x 45	2.0	C	1.7	C	1.6	D	1.4	D
190 x 45	2.5	C	2.2	D	1.97	E	1.8	E
240 x 45	2.8	D	2.4	D	2.2	E	2.0	E
290 x 45	2.9	D	2.6	D	2.3	E	2.2	F
90 x 70	1.5	B	1.3	C	1.2	C	–	–
140 x 70	2.3	C	2.0	D	1.8	D	1.7	E
190 x 70	3.2	D	2.8	E	2.5	E	2.4	F
240 x 70	5.1	E	4.6	F	4.0	F	3.8	F
290 x 70	5.8	F	5.1	F	4.6	F	–	–
190 x 90	4.4	E	3.8	F	3.4	F	3.3	F
240 x 90	5.5	F	4.8	F	4.4	F	–	–
290 x 90	6.7	F	5.8	F	–	–	–	–

* For definition of loaded dimension see 1.3.

Fixing type	Fixing to resist uplift for underpurlins (For ridge beams refer to table 10.3 and figure 10.7)	Alternative fixing capacity (kN)
B	2/100 x 3.75 skewed nails + 1 wire dog	2.7
C	2/100 x 3.75 skewed nails + 2 wire dogs	4.7
D	2/100 x 3.75 skewed nails + 3 wire dogs	6.7
E	2/100 x 3.75 skewed nails + 4 wire dogs	8.7
F	2/100 x 3.75 skewed nails + U strap of 27 mm x 1.2 mm 10/30 x 3.15 nails at each end	16.0

NOTE –

(1) Spans may be increased by 10 % for underpurlins over 2 or more spans.

(2) Fixing types for continuous spans shall have double the capacity to that listed in the table.

(3) Members 70 mm and 90 mm thick may be substituted with built-up members sized and nailed in accordance with 2.4.4.7.

Amd 2 May '06

Copyright Standards New Zealand

Table 15.7 – Underpurlins and ridge beams (see 10.2.1.9.1) **– VSG 10 and MSG 10**

(b) Heavy roof for low, medium, high and very high wind zone

Underpurlin or ridge beam size (Width x thickness)	Loaded dimension* of underpurlin or ridge beam (m)							
	1.8		2.7		3.6		4.2	
	Span	Fixing type	Span	Fixing type	Span	Fixing type	Span	Fixing type
(mm x mm)	(m)		(m)		(m)		(m)	
40 x 45	1.5	B	1.3	C	1.2	C	–	–
190 x 45	2.1	C	1.8	C	1.7	D	1.6	D
240 x 45	2.7	C	2.3	D	2.1	D	1.9	D
290 x 45	3.0	C	2.6	D	2.3	D	2.2	E
140 x 70	1.8	B	1.6	C	1.4	C	1.3	C
190 x 70	2.4	C	2.1	C	1.9	D	1.8	D
240 x 70	3.9	D	3.4	E	3.8	F	3.6	F
290 x 70	4.7	D	4.1	F	3.8	F	3.6	F
190 x 90	3.4	D	2.9	D	2.7	E	2.5	E
240 x 90	4.3	D	3.7	E	3.4	F	3.2	F
290 x 90	5.2	E	4.5	F	4.1	F	3.9	F

* For definition of loaded dimension see 1.3.

Fixing type	Fixing to resist uplift for underpurlins (For ridge beams refer to table 10.3 and figure 10.7)	Alternative fixing capacity (kN)
B	2/100 x 3.75 skewed nails + 1 wire dog	2.7
C	2/100 x 3.75 skewed nails + 2 wire dogs	4.7
D	2/100 x 3.75 skewed nails + 3 wire dogs	6.7
E	2/100 x 3.75 skewed nails + 4 wire dogs	8.7
F	2/100 x 3.75 skewed nails + U strap of 27 mm x 1.2 mm 10/30 x 3.15 nails at each end	16.0

NOTE –

(1) Spans may be increased by 10 % for underpurlins over 2 or more spans.

(2) Fixing types for continuous spans shall have double the capacity to that listed in the table.

(3) Members 70 mm and 90 mm thick may be substituted with built-up members sized and nailed in accordance with 2.4.4.7.

Amd 2 May '06

© The Crown in right of New Zealand, administered by the New Zealand Standards Executive. Access to this standard has been sponsored by the Ministry of Business, Innovation, and Employment under copyright license LN001498. You are not permitted to reproduce or distribute any part of this standard without prior written permission from Standards New Zealand, on behalf of New Zealand Standards Executive, unless your actions are covered by Part 3 of the Copyright Act 1994.

Copyright Standards New Zealand

© The Crown in right of New Zealand, administered by the New Zealand Standards Executive. Access to this standard has been sponsored by the Ministry of Business, Innovation, and Employment under copyright license LN001498. You are not permitted to reproduce or distribute any part of this standard without prior written permission from Standards New Zealand, on behalf of New Zealand Standards Executive, unless your actions are covered by Part 3 of the Copyright Act 1994.

Table 15.8 – Verandah beams – Low to very high wind zones (see 10.2.1.12) **– No. 1 Framing and MSG 6**

Beam size (Width x thickness)	Loaded dimension of verandah beam (m)							
	0.9		1.4		1.8		2.1	
	Span	Fixing type	Span	Fixing type	Span	Fixing type	Span	Fixing type
(mm x mm)	(m)		(m)		(m)		(m)	
A Light roof								
140 x 45	1.7	CC	1.2	CC	–	–	–	–
190 x 45	2.0	CC	1.5	CC	1.4	DD	1.3	DD
240 x 45	2.3	CC	1.8	DD	1.6	DD	1.5	DD
290 x 45	2.4	CC	1.9	DD	1.8	DD	1.7	EE
140 x 70	2.0	CC	1.5	CC	1.4	DD	1.3	DD
190 x 70	2.8	CC	2.1	DD	1.9	EE	1.8	EE
240 x 70	3.4	DD	2.5	EE	2.3	EE	2.2	FF
290 x 70	3.7	DD	2.9	EE	2.6	FF	2.5	FF
140 x 90	2.2	CC	1.8	DD	1.6	DD	1.5	DD
190 x 90	3.0	CC	2.4	EE	2.1	EE	2.0	EE
240 x 90	3.8	DD	3.0	FF	2.7	FF	2.5	FF
290 x 90	5.8	FF	4.7	FF	4.3	FF	4.1	FF
B Heavy roof								
140 x 45	1.4	CC	–	–	–	–	–	–
190 x 45	1.8	CC	1.3	CC	1.2	CC	–	–
240 x 45	2.0	CC	1.6	CC	1.4	CC	1.3	DD
290 x 45	2.2	CC	1.7	CC	1.6	DD	1.5	DD
140 x 70	1.6	CC	1.3	CC	1.2	CC	–	–
190 x 70	2.2	CC	1.8	CC	1.6	DD	1.5	DD
240 x 70	2.8	CC	2.2	DD	2.0	DD	1.9	DD
290 x 70	3.3	CC	2.5	DD	2.3	EE	2.2	EE
140 x 90	1.8	CC	1.4	CC	1.3	CC	1.2	CC
190 x 90	2.4	CC	1.9	DD	1.8	DD	1.7	DD
240 x 90	3.1	CC	2.4	DD	2.3	EE	2.1	EE
290 x 90	4.7	DD	3.7	FF	3.5	FF	3.3	FF

Fixing type	Fixing to resist uplift	Alternative fixing capacity (kN)
CC	6/100 x 3.75 nails	4.7
DD	1/M12 bolt	6.7
EE	1/M12 bolt	8.7
FF	3/M12 bolts or 2/M16 bolts	18.6

NOTE –
(1) This table includes provision for the rafters cantilevering a maximum of 750 mm beyond the verandah beam to support a soffit.
(2) Fixing type for continuous spans shall have double the capacity to that listed in the table.
(3) Members 70 mm and 90 mm thick may be substituted with built-up members sized and nailed in accordance with 2.4.4.7.

Amd 2 May '06

Copyright Standards New Zealand

© The Crown in right of New Zealand, administered by the New Zealand Standards Executive. Access to this standard has been sponsored by the Ministry of Business, Innovation, and Employment under copyright license LN001498. You are not permitted to reproduce or distribute any part of this standard without prior written permission from Standards New Zealand, on behalf of New Zealand Standards Executive, unless your actions are covered by Part 3 of the Copyright Act 1994.

Table 15.8 – Verandah beams – Low to very high wind zones (see 10.2.1.12) **– VSG 8 and MSG 8**

Beam size (Width x thickness)	Loaded dimension of verandah beam (m)							
	0.9		1.4		1.8		2.1	
	Span	Fixing type	Span	Fixing type	Span	Fixing type	Span	Fixing type
(mm x mm)	(m)		(m)		(m)		(m)	
A Light roof								
140 x 45	1.9	CC	1.4	CC	1.3	DD	1.2	DD
190 x 45	2.3	CC	1.8	DD	1.6	DD	1.5	DD
240 x 45	2.5	CC	2.0	DD	1.8	EE	1.8	EE
290 x 45	2.7	CC	2.2	DD	2.0	EE	1.9	EE
140 x 70	2.2	CC	1.8	DD	1.6	DD	1.5	DD
190 x 70	3.1	CC	2.4	EE	2.2	EE	2.1	FF
240 x 70	3.9	DD	2.9	EE	2.7	FF	2.5	FF
290 x 70	4.2	DD	3.3	FF	3.0	FF	2.9	FF
140 x 90	2.4	CC	2.0	DD	1.8	EE	1.7	EE
190 x 90	3.3	DD	2.7	EE	2.5	FF	2.4	FF
240 x 90	4.2	DD	3.4	FF	3.1	FF	3.0	FF
290 x 90	6.5	FF	5.2	FF	4.8	FF	–	–
B Heavy roof								
140 x 45	1.5	CC	1.2	CC	–	–	–	–
190 x 45	2.0	CC	1.5	CC	1.4	CC	1.3	DD
240 x 45	2.3	CC	1.8	CC	1.6	DD	1.5	DD
290 x 45	2.4	CC	1.9	DD	1.8	DD	1.7	DD
140 x 70	1.8	CC	1.4	CC	1.3	CC	1.3	CC
190 x 70	2.4	CC	2.0	DD	1.8	DD	1.7	DD
240 x 70	3.1	CC	2.5	DD	2.3	EE	2.2	EE
290 x 70	3.7	DD	2.9	EE	2.6	EE	2.5	FF
140 x 90	2.0	CC	1.6	CC	1.4	CC	1.4	DD
190 x 90	2.7	CC	2.1	DD	2.0	DD	1.9	DD
240 x 90	3.4	CC	2.7	DD	2.5	EE	2.4	EE
290 x 90	5.2	DD	4.1	FF	3.8	FF	3.7	FF

Fixing type	Fixing to resist uplift	Alternative fixing capacity (kN)
CC	6/100 x 3.75 nails	4.7
DD	1/M12 bolt	6.7
EE	1/M12 bolt	8.7
FF	3/M12 bolts or 2/M16 bolts	18.6

Amd 2 May '06

NOTE –
(1) This table includes provision for the rafters cantilevering a maximum of 750 mm beyond the verandah beam to support a soffit.
(2) Fixing type for continuous spans shall have double the capacity to that listed in the table.
(3) Members 70 mm and 90 mm thick may be substituted with built-up members sized and nailed in accordance with 2.4.4.7.

Copyright Standards New Zealand

© The Crown in right of New Zealand, administered by the New Zealand Standards Executive. Access to this standard has been sponsored by the Ministry of Business, Innovation, and Employment under copyright license LN001498. You are not permitted to reproduce or distribute any part of this standard without prior written permission from Standards New Zealand, on behalf of New Zealand Standards Executive, unless your actions are covered by Part 3 of the Copyright Act 1994.

Table 15.8 – Verandah beams – Low to very high wind zones (see 10.2.1.12) **– VSG 10 and MSG 10**

Beam size (Width x thickness)	Loaded dimension of verandah beam (m)							
	0.9		1.4		1.8		2.1	
	Span	Fixing type	Span	Fixing type	Span	Fixing type	Span	Fixing type
(mm x mm)	(m)		(m)		(m)		(m)	
A Light roof								
140 x 45	2.1	CC	1.7	DD	1.5	DD	1.4	DD
190 x 45	2.6	CC	2.0	DD	1.9	EE	1.8	EE
240 x 45	2.9	CC	2.3	EE	2.1	EE	2.0	EE
290 x 45	3.1	CC	2.5	EE	2.3	EE	2.2	FF
140 x 70	2.4	CC	1.9	DD	1.8	DD	1.7	EE
190 x 70	3.3	DD	2.6	EE	2.4	FF	2.3	FF
240 x 70	4.2	DD	3.3	FF	3.1	FF	2.9	FF
290 x 70	4.8	EE	3.8	FF	3.5	FF	3.3	FF
140 x 90	2.6	CC	2.1	DD	1.9	EE	1.9	EE
190 x 90	3.6	DD	2.9	EE	2.7	FF	2.5	FF
240 x 90	4.5	EE	3.6	FF	3.4	FF	3.2	FF
290 x 90	6.9	FF	5.6	FF	–	–	–	–
B Heavy roof								
140 x 45	1.7	CC	1.3	CC	1.2	CC	1.2	CC
190 x 45	2.3	CC	1.8	CC	1.6	DD	1.6	DD
240 x 45	2.6	CC	2.0	DD	1.9	DD	1.8	DD
290 x 45	2.7	CC	2.2	DD	2.0	DD	1.9	EE
140 x 70	1.9	CC	1.5	CC	1.4	CC	1.4	DD
190 x 70	2.6	CC	2.1	DD	1.9	DD	1.9	DD
240 x 70	3.3	CC	2.7	DD	2.5	EE	2.4	EE
290 x 70	4.0	DD	3.2	EE	3.0	FF	2.9	FF
140 x 90	2.1	CC	1.7	CC	1.6	DD	1.5	DD
190 x 90	3.1	CC	2.3	DD	2.1	EE	2.2	EE
240 x 90	3.6	CC	2.9	EE	2.7	EE	2.6	FF
290 x 90	5.6	EE	4.4	FF	4.1	FF	3.9	FF

Fixing type	Fixing to resist uplift	Alternative fixing capacity (kN)
CC	6/100 x 3.75 nails	4.7
DD	1/M12 bolt	6.7
EE	1/M12 bolt	8.7
FF	3/M12 bolts or 2/M16 bolts	18.6

NOTE –
(1) This table includes provision for the rafters cantilevering a maximum of 750 mm beyond the verandah beam to support a soffit.
(2) Fixing type for continuous spans shall have double the capacity to that listed in the table.
(3) Members 70 mm and 90 mm thick may be substituted with built-up members sized and nailed in accordance with 2.4.4.7.

Amd 2 May '06

Copyright Standards New Zealand

© The Crown in right of New Zealand, administered by the New Zealand Standards Executive. Access to this standard has been sponsored by the Ministry of Business, Innovation, and Employment under copyright license LN001498. You are not permitted to reproduce or distribute any part of this standard without prior written permission from Standards New Zealand, on behalf of New Zealand Standards Executive, unless your actions are covered by Part 3 of the Copyright Act 1994.

SECTION 16

COMPOSITE CONSTRUCTION LINTEL TABLES

ADDITIONAL INFORMATION (NORMATIVE)

16.1 Plywood box beam lintels **16**-3

16.2 Glue laminated timber lintels **16**-3

Table

16.1 Plywood box beam lintels supporting roof only **16**-3

16.2 Glue laminated timber lintel equivalents to plywood box beam lintels in table 16.1 ..... **16**-3

Figure

16.1 Built-up plywood box beam lintel – vertical section **16**-4

16.2 Built-up plywood box beam lintel – elevation and longitudinal section **16**-4

Copyright Standards New Zealand

© The Crown in right of New Zealand, administered by the New Zealand Standards Executive. Access to this standard has been sponsored by the Ministry of Business, Innovation, and Employment under copyright license LN001498. You are not permitted to reproduce or distribute any part of this standard without prior written permission from Standards New Zealand, on behalf of New Zealand Standards Executive, unless your actions are covered by Part 3 of the Copyright Act 1994.

Copyright Standards New Zealand

© The Crown in right of New Zealand, administered by the New Zealand Standards Executive. Access to this standard has been sponsored by the Ministry of Business, Innovation, and Employment under copyright license LN001498. You are not permitted to reproduce or distribute any part of this standard without prior written permission from Standards New Zealand, on behalf of New Zealand Standards Executive, unless your actions are covered by Part 3 of the Copyright Act 1994.

16 COMPOSITE CONSTRUCTION LINTEL TABLES

16.1 Plywood box beam lintels

Plywood box beam *lintels* shall be constructed as shown in figures 16.1 and 16.2 and may be used instead of those given in 8.6 to support roofs that are not subjected to snow loading. Beam sizes shall be as given in table 16.1 depending on roof type and pitch, and the *loaded dimension*. Other requirements shall be as given in 8.6. The fixings shall be in accordance with tables 8.14 and 8.19 for spans up to 4.1 m and in accordance with figure 16.2 for spans greater than 4.1 m. Use only VSG 8/MSG 8 or VSG 10/MSG10 for top and bottom chords of box beams.

Amd 1 Dec '00

Amd 2 May '06

C16

Lintels supporting walls, floors or snow loading must be to specific engineering design.

Table 16.1 – Plywood box beam lintels supporting roof only (see 8.6.1.2)

Lintel size		Roof	Maximum span of lintel for loaded dimension of (m)			
Depth (mm)	Width (mm)	pitch (degrees)	3.0	4.0	5.0	6.0
A Light roof						
400	88	15	4.8	4.5	4.3	4.1
		25	4.7	4.4	4.2	4.0
		45	4.4	4.2	4.0	3.8
360	88	15	4.5	4.2	4.0	3.8
		25	4.4	4.1	3.9	3.7
		45	4.1	3.9	3.7	3.3
B Heavy roof						
400	88	25	4.0	3.8	3.4	2.9
		45	3.8	3.2	2.7	2.3
360	88	25	3.8	3.5	3.0	2.5
		45	3.5	2.8	2.3	2.0

16.2 Glue laminated timber lintels

Glue laminated timber *lintels* manufactured in accordance with AS/NZS 1328:Parts 1 and 2, as given in table 16.2, may be substituted for plywood box beam *lintels* in table 16.1.

Table 16.2 – Glue laminated timber lintel equivalents to plywood box beam lintels in table 16.1 (see 8.6.1.2)

Plywood box beam lintel No. 1 framing chords		Equivalent glue laminated beam					
		Glulam grade					
		GL8		GL10		GL12	
Depth (mm)	Width (mm)	Depth (mm)	Width (mm)	Depth (mm)	Width (mm)	Depth (mm)	Width (mm)
400	88	355	90	329	90	310	90
360	88	324	90	301	90	283	90

Copyright Standards New Zealand

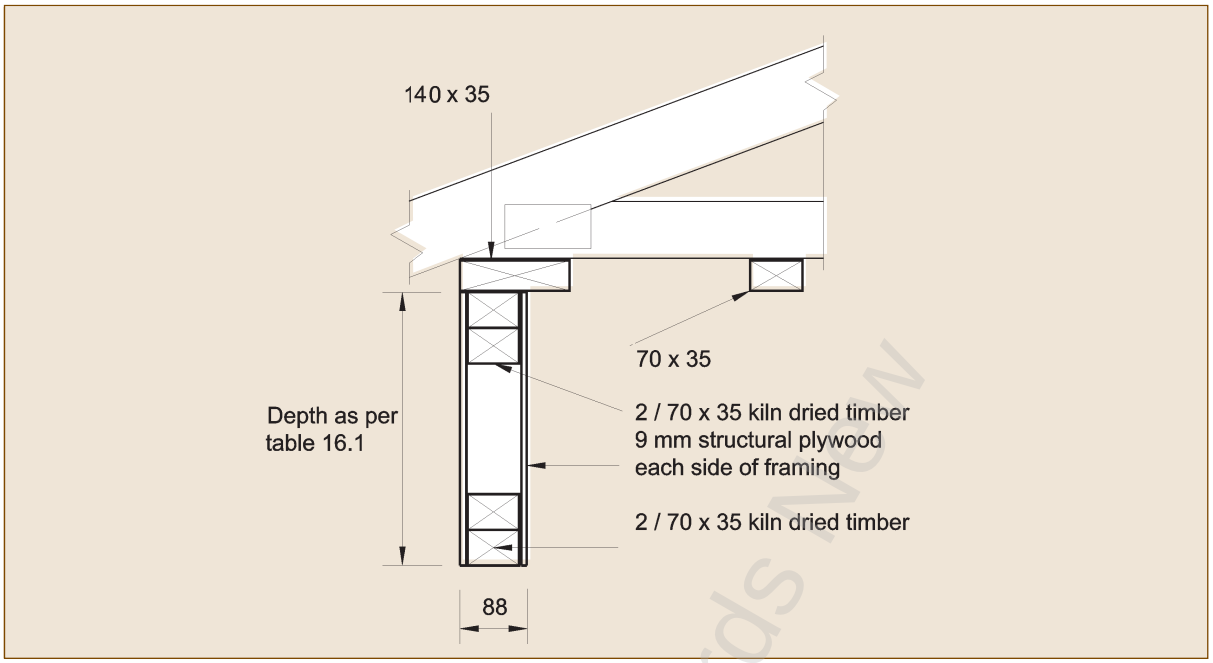

Figure 16.1 – Built-up plywood box beam lintel – vertical section (see 8.6.1.7)

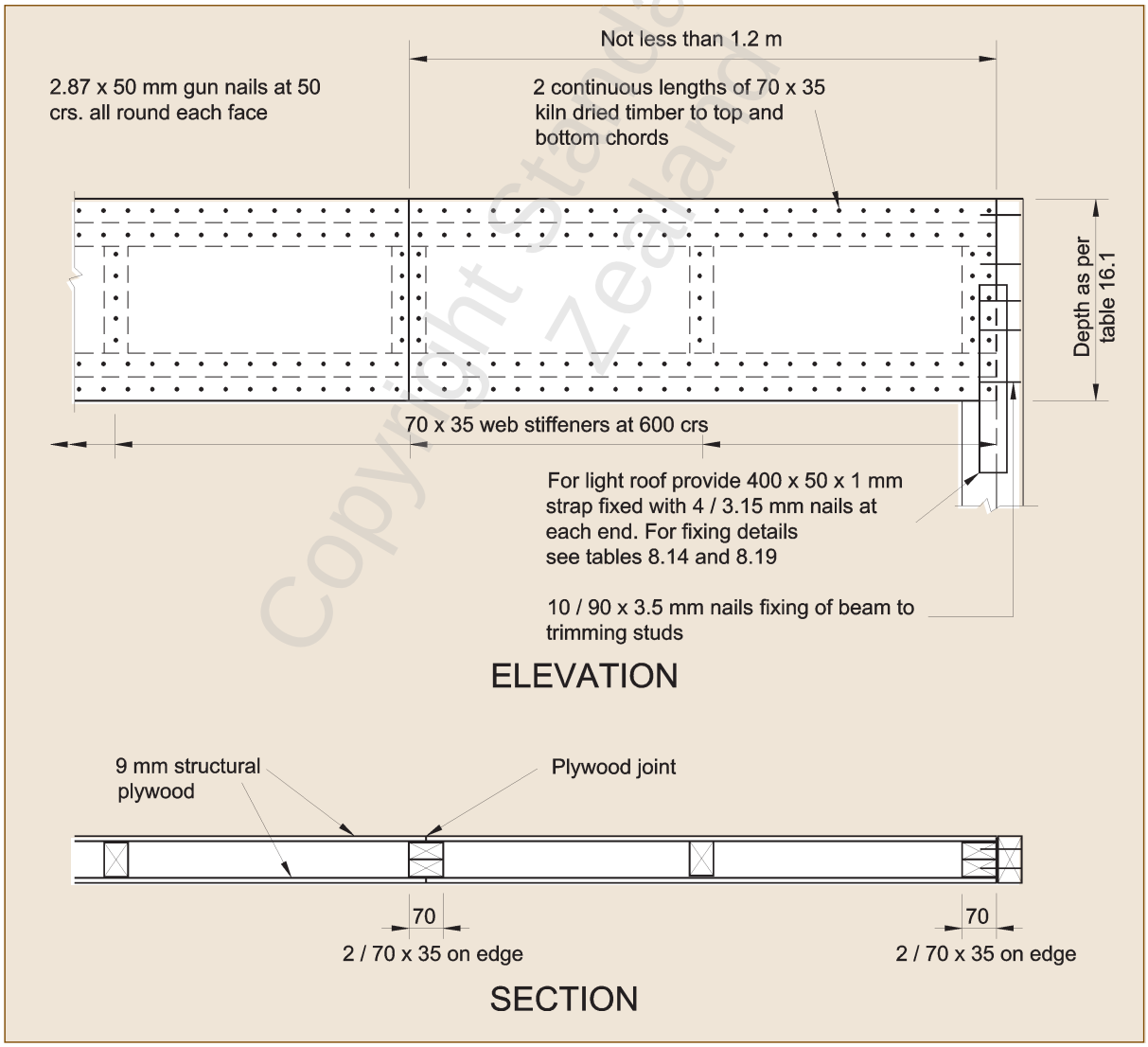

Figure 16.2 – Built-up plywood box beam lintel – elevation and longitudinal section (see 8.6.1.7)

Amd 1
Dec '00

© The Crown in right of New Zealand, administered by the New Zealand Standards Executive. Access to this standard has been sponsored by the Ministry of Business, Innovation, and Employment under copyright license LN001498. You are not permitted to reproduce or distribute any part of this standard without prior written permission from Standards New Zealand, on behalf of New Zealand Standards Executive, unless your actions are covered by Part 3 of the Copyright Act 1994.

Copyright Standards New Zealand

© The Crown in right of New Zealand, administered by the New Zealand Standards Executive. Access to this standard has been sponsored by the Ministry of Business, Innovation, and Employment under copyright license LN001498. You are not permitted to reproduce or distribute any part of this standard without prior written permission from Standards New Zealand, on behalf of New Zealand Standards Executive, unless your actions are covered by Part 3 of the Copyright Act 1994.

SECTIONS 17, 18, 19 AND 20
ADDITIONAL INFORMATION (INFORMATIVE)

The term "informative" has been used in this Standard to define the application of this additional information. "Informative" information is for guidance only. It does not form part of the mandatory requirements of the Standard nor do the sections form part of the Standard as an Acceptable Solution to the *NZBC*.

Copyright Standards New Zealand

© The Crown in right of New Zealand, administered by the New Zealand Standards Executive. Access to this standard has been sponsored by the Ministry of Business, Innovation, and Employment under copyright license LN001498. You are not permitted to reproduce or distribute any part of this standard without prior written permission from Standards New Zealand, on behalf of New Zealand Standards Executive, unless your actions are covered by Part 3 of the Copyright Act 1994.

Copyright Standards New Zealand

© The Crown in right of New Zealand, administered by the New Zealand Standards Executive. Access to this standard has been sponsored by the Ministry of Business, Innovation, and Employment under copyright license LN001498. You are not permitted to reproduce or distribute any part of this standard without prior written permission from Standards New Zealand, on behalf of New Zealand Standards Executive, unless your actions are covered by Part 3 of the Copyright Act 1994.

SECTION 17

EXPANSIVE SOILS

ADDITIONAL INFORMATION (INFORMATIVE)

17.1 General **17**-3
17.2 Building sites **17**-3
17.3 Foundations **17**-3
17.4 Reinforcement **17**-3

Copyright Standards New Zealand

© The Crown in right of New Zealand, administered by the New Zealand Standards Executive. Access to this standard has been sponsored by the Ministry of Business, Innovation, and Employment under copyright license LN001498. You are not permitted to reproduce or distribute any part of this standard without prior written permission from Standards New Zealand, on behalf of New Zealand Standards Executive, unless your actions are covered by Part 3 of the Copyright Act 1994.

Copyright Standards New Zealand

© The Crown in right of New Zealand, administered by the New Zealand Standards Executive. Access to this standard has been sponsored by the Ministry of Business, Innovation, and Employment under copyright license LN001498. You are not permitted to reproduce or distribute any part of this standard without prior written permission from Standards New Zealand, on behalf of New Zealand Standards Executive, unless your actions are covered by Part 3 of the Copyright Act 1994.

17 EXPANSIVE SOILS

17.1 General

17.1.1
Expansive soils with a liquid limit more than 50 % when tested in accordance with NZS 4402 Test 2.2, and a linear shrinkage of more than 15 % when tested in accordance with NZS 4402 Test 2.6, are excluded from *good ground* defined in 1.3.

17.1.2
This is because they cover reactive soils, such as expansive clay soils, which swell on wetting and shrink on drying by an amount that can damage buildings on light strip *footings* or unstiffened slabs.

17.1.3
Not all clays are expansive to the degree which will cause damage to buildings. *Foundations* supported on such clays are covered in section 6.

17.1.4
The liquid limit and linear shrinkage properties of a soil need to be classified by a soil mechanics laboratory. Reactive clay soils cannot be clearly evaluated by these engineering index properties which on their own may not be reliable.

17.1.5
For this reason, sites need to be classified into one of the classes (S, M, H or E) as set out in AS 2870 so that standard *footing* designs set out in section 3 of AS 2870 can be used on sites with expansive soils.

17.2 Building sites
Building sites which contain expansive soils as defined in item (b) of the definition for *good ground* in 1.3 should be classified into class S, M, H or E in accordance with the provisions of AS 2870.

17.3 Foundations
The *foundations* for buildings supported on sites identified as containing expansive soils should be detailed to the provisions contained in sections 3, 5 and 6 of AS 2870.

17.4 Reinforcement
Reinforcement specified in AS 2870 refers to Trench Mesh (TM), Square Fabric (F) and reinforcing steel (Y) to the provisions of AS 1304 and AS 1302.

C17.2
This clause requires the input of the appropriate Building Consent Authority having jurisdiction, or of a geomechanical engineer or soils laboratory. Useful information relating to this subject is contained in the commentary to AS 2870.

The design engineer may wish to refer to AS 2780, or provide a specific engineering design for the proposed building.

Copyright Standards New Zealand

NOTES

© The Crown in right of New Zealand, administered by the New Zealand Standards Executive. Access to this standard has been sponsored by the Ministry of Business, Innovation, and Employment under copyright license LN001498. You are not permitted to reproduce or distribute any part of this standard without prior written permission from Standards New Zealand, on behalf of New Zealand Standards Executive, unless your actions are covered by Part 3 of the Copyright Act 1994.

Copyright Standards New Zealand

© The Crown in right of New Zealand, administered by the New Zealand Standards Executive. Access to this standard has been sponsored by the Ministry of Business, Innovation, and Employment under copyright license LN001498. You are not permitted to reproduce or distribute any part of this standard without prior written permission from Standards New Zealand, on behalf of New Zealand Standards Executive, unless your actions are covered by Part 3 of the Copyright Act 1994.

SECTION 18

BUILDING PRODUCT APPRAISALS AND BIA ACCREDITATIONS

ADDITIONAL INFORMATION (INFORMATIVE)

Copyright Standards New Zealand

© The Crown in right of New Zealand, administered by the New Zealand Standards Executive. Access to this standard has been sponsored by the Ministry of Business, Innovation, and Employment under copyright license LN001498. You are not permitted to reproduce or distribute any part of this standard without prior written permission from Standards New Zealand, on behalf of New Zealand Standards Executive, unless your actions are covered by Part 3 of the Copyright Act 1994.

Copyright Standards New Zealand

This section is available for users to include, for their own reference, copies of related appraisals and BIA accreditations of proprietary products and /or systems.

Copyright Standards New Zealand

© The Crown in right of New Zealand, administered by the New Zealand Standards Executive. Access to this standard has been sponsored by the Ministry of Business, Innovation, and Employment under copyright license LN001498. You are not permitted to reproduce or distribute any part of this standard without prior written permission from Standards New Zealand, on behalf of New Zealand Standards Executive, unless your actions are covered by Part 3 of the Copyright Act 1994.

NOTES

© The Crown in right of New Zealand, administered by the New Zealand Standards Executive. Access to this standard has been sponsored by the Ministry of Business, Innovation, and Employment under copyright license LN001498. You are not permitted to reproduce or distribute any part of this standard without prior written permission from Standards New Zealand, on behalf of New Zealand Standards Executive, unless your actions are covered by Part 3 of the Copyright Act 1994.

Copyright Standards New Zealand

© The Crown in right of New Zealand, administered by the New Zealand Standards Executive. Access to this standard has been sponsored by the Ministry of Business, Innovation, and Employment under copyright license LN001498. You are not permitted to reproduce or distribute any part of this standard without prior written permission from Standards New Zealand, on behalf of New Zealand Standards Executive, unless your actions are covered by Part 3 of the Copyright Act 1994.

SECTION 19

STATUTORY INFORMATION

ADDITIONAL INFORMATION (INFORMATIVE)

19.1 General **19**-3

19.2 The framework **19**-4

NZBC Clause B1 Structure **19**-6

NZBC Clause B2 Durability **19**-8

NZBC Clause E2 External Moisture **19**-10

Copyright Standards New Zealand

© The Crown in right of New Zealand, administered by the New Zealand Standards Executive. Access to this standard has been sponsored by the Ministry of Business, Innovation, and Employment under copyright license LN001498. You are not permitted to reproduce or distribute any part of this standard without prior written permission from Standards New Zealand, on behalf of New Zealand Standards Executive, unless your actions are covered by Part 3 of the Copyright Act 1994.

Copyright Standards New Zealand

© The Crown in right of New Zealand, administered by the New Zealand Standards Executive. Access to this standard has been sponsored by the Ministry of Business, Innovation, and Employment under copyright license LN001498. You are not permitted to reproduce or distribute any part of this standard without prior written permission from Standards New Zealand, on behalf of New Zealand Standards Executive, unless your actions are covered by Part 3 of the Copyright Act 1994.

19 STATUTORY INFORMATION

This section is informative only.

19.1 General

19.1.1 *The Building Act*

Building work in New Zealand is governed by one piece of legislation – the Building Act. It was passed in 1991 as "an Act to consolidate and reform the law relating to building and to provide for better regulation and control of building".

19.1.2

Key objectives of the Act are to:

(a) Safeguard the health, safety and amenity interests of people;

(b) Protect other property from damage;

(c) Facilitate efficient use of energy;

(d) Provide access and facilities for people with disabilities.

19.1.3

The Building Act established a simple framework of building controls:

(a) The Building Regulations 1992 contain the mandatory New Zealand Building Code and particular details about the processing of building approvals.

(b) The Approved Documents are (non-mandatory) documents written by the Building Industry Authority to assist people in complying with the Building Code.

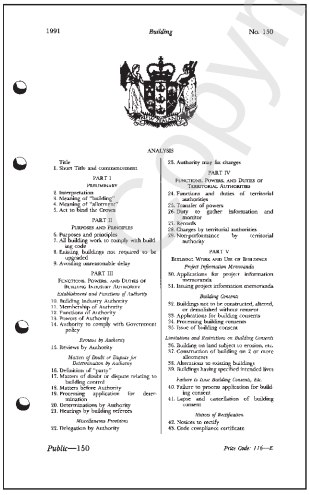
1991 *Building* No. 150

ANALYSIS

Title
1. Short Title and commencement

PART I
PRELIMINARY
2. Interpretation
3. Meaning of "building"
4. Meaning of "alterations"
5. Act to bind the Crown

PART II
PURPOSES AND PRINCIPLES
6. Purposes and principles
7. All building work to comply with building code
8. Existing buildings not required to be upgraded
9. Avoiding unreasonable delay

PART III
FUNCTIONS, POWERS, AND DUTIES OF BUILDING INDUSTRY AUTHORITY
Establishment and Functions of Authority
10. Building Industry Authority
11. Functions of Authority
12. Functions of Authority
13. Powers of Authority
14. Authority to comply with Government policy
Forms by Authority
15. Reviews by Authority
Matters of Doubt or Dispute for Determination by Authority
16. Definitions of "party"
17. Matters before Authority in dispute relating to building consent
18. Matters before Authority
19. Processing application for determination
20. Determination by Authority
21. Hearings by building referees
Miscellaneous Provisions
22. Delegation by Authority
23. Authority may fix charges

PART IV
FUNCTIONS, POWERS, AND DUTIES OF TERRITORIAL AUTHORITIES
24. Functions and duties of territorial authorities
25. Transfer of powers
26. Duty to gather information and monitor
27. Records
28. Charges by territorial authorities
29. Non-performance by territorial authority

PART V
BUILDING WORK AND USE OF BUILDINGS
Project Information Memoranda
30. Applications for project information memoranda
31. Issuing project information memoranda
Building Consent
32. Buildings not to be constructed, altered, or demolished without consent
33. Applications for building consents
34. Processing building consents
35. Issue of building consent
Limitations and Restrictions on Building Consents
36. Building on land subject to erosion, etc.
37. Construction of building on 2 or more allotments
38. Alterations to existing buildings
39. Buildings being specified intended lives
Failure to Issue Building Consents, etc.
40. Failure to process application for building consent
41. Lapse and cancellation of building consents
Notices of Requirements
42. Notices to certify
43. Code compliance certificate

Public—150 *Price Code: 116—E*

Building Act 1991 – Law

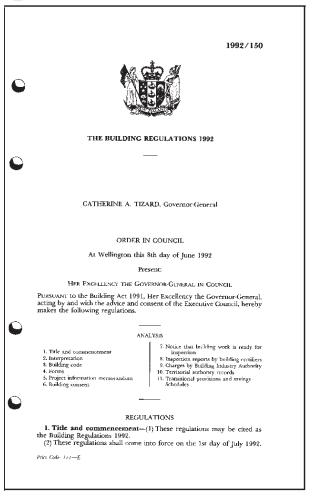
1992/150

THE BUILDING REGULATIONS 1992

CATHERINE A. TIZARD, Governor-General

ORDER IN COUNCIL

At Wellington this 8th day of June 1992

Present:

HER EXCELLENCY THE GOVERNOR-GENERAL IN COUNCIL

PURSUANT to the Building Act 1991, Her Excellency the Governor-General, acting by and with the advice and consent of the Executive Council, hereby makes the following regulations.

ANALYSIS

1. Title and commencement
2. Interpretation
3. Building code
4. Access
5. Project information memoranda
6. Building consents
7. Notice that building work is ready for inspection
8. Inspection reports by building owners
9. Charges by Building Industry Authority
10. Territorial authority records
11. Transitional provisions and savings
Schedules

REGULATIONS

1. Title and commencement—(1) These regulations may be cited as the Building Regulations 1992.
(2) These regulations shall come into force on the 1st day of July 1992.

Price Code: 112—E

Building Regulations 1992. Building Code – Law

C19.1.1
The Act applies to the construction, alteration, demolition and maintenance of new and existing buildings throughout New Zealand and includes Government building work.
This section is included as background information for users of this Standard.

C19.1.2
The Act is not involved with planning and resource management, the finish and appearance of a building, nor protection of capital investment. These are the owner's responsibility. Gas and electrical work also are not covered by the Act.

Copyright Standards New Zealand

© The Crown in right of New Zealand, administered by the New Zealand Standards Executive. Access to this standard has been sponsored by the Ministry of Business, Innovation, and Employment under copyright license LN001498. You are not permitted to reproduce or distribute any part of this standard without prior written permission from Standards New Zealand, on behalf of New Zealand Standards Executive, unless your actions are covered by Part 3 of the Copyright Act 1994.

19.2 The framework

19.2.1 *The New Zealand Building Code* – (Mandatory)

The Building Code has the following requirements:

(a) All building work must comply with the Building Code.

(b) The Building Code is a performance-based code. It sets out objectives to be achieved rather than prescribing construction methods. The emphasis is on how a building and its components must perform as distinct from how the building must be designed and constructed.

(c) The Building Code is divided into 35 technical clauses. Each clause has a similar structure and contains the following:

(1) Objective.
States WHY the clause is necessary.

(2) Functional requirement
Describes WHAT the building must do to satisfy the objective.

(3) Performance
States HOW MUCH by way of quantitative or qualitative criteria.

19.2.2 *BIA Approved Documents* - (Non-mandatory)

The New Zealand Building Code Handbook and Approved Documents are guidance documents published by the Building Industry Authority. They provide methods of compliance with the Building Code, and contain:

(a) Verification Methods. MEASURE (Tests and calculations used to establish compliance with the Building Code).

(b) Acceptable Solutions. WAYS OF COMPLYING (Step-by-step methods which meet the requirements of the Building Code).

Copyright Standards New Zealand

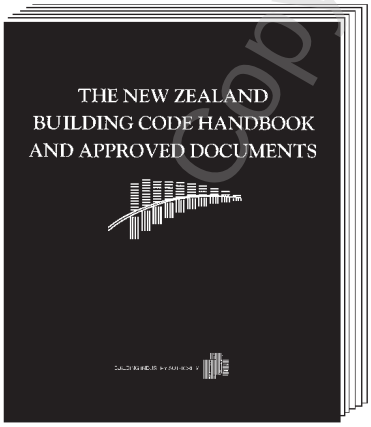

Approved Documents

Referenced Documents

© The Crown in right of New Zealand, administered by the New Zealand Standards Executive. Access to this standard has been sponsored by the Ministry of Business, Innovation, and Employment under copyright license LN001498. You are not permitted to reproduce or distribute any part of this standard without prior written permission from Standards New Zealand, on behalf of New Zealand Standards Executive, unless your actions are covered by Part 3 of the Copyright Act 1994.

19.2.3 *Referenced Documents*

The BIA Approved Documents quote other documents such as New Zealand Standards. So, if building work is done according to a Standard that is referenced in the Approved Documents the work is deemed to comply with the code.

Summary

The law requires all building work to comply with the New Zealand Building Code, but it does not say how you must comply. Designers and builders may follow an acceptable solution or may propose an alternative solution. An alternative solution differs totally or partially from solutions given in the Approved Documents yet complies with the code. Before work can legally commence a building consent must be issued by the local *Building Consent Authority*.

19.2.4 *Building consent applications*

Every application for a building consent in accordance with the Building Act 1991 should include the following to comply with this Standard:

(a) A floor plan of each level;

(b) An elevation of each *external wall*;

(c) Cross sections showing the overall structural system;

(d) The type and location of each *foundation* element (for example: reinforced masonry *foundation wall*, *anchor pile*, *cantilevered piles*, and so on);

(e) Adequate information on all subfloor, floor, wall framing and roof framing or trusses;

(f) The type and location of each *subfloor brace*, *wall bracing elements* and the number of *bracing units* assigned to each *bracing* element, and a *bracing* schedule and roof *bracing* showing the *bracing demand* together with the *bracing* supplied;

(g) Adequate information on the type, location and fixing of the building envelope and internal *linings*.

Copyright Standards New Zealand

© The Crown in right of New Zealand, administered by the New Zealand Standards Executive. Access to this standard has been sponsored by the Ministry of Business, Innovation, and Employment under copyright license LN001498. You are not permitted to reproduce or distribute any part of this standard without prior written permission from Standards New Zealand, on behalf of New Zealand Standards Executive, unless your actions are covered by Part 3 of the Copyright Act 1994.

NZBC Clauses

On this and the following pages of secton 19, the words of the NZBC are quoted. The terms in italics are those which appear in the Definitions section of the NZBC Handbook.

NZBC Clause B1 STRUCTURE

This Clause is extracted from the New Zealand Building Code contained in the First Schedule of the Building Regulations 1992.

Provisions

OBJECTIVE

B1.1 The objective of this provision is to:

(a) Safeguard people from injury caused by structural failure,

(b) Safeguard people from loss of *amenity* caused by structural behaviour, and

(c) Protect *other property* from physical damage caused by structural failure.

FUNCTIONAL REQUIREMENT

B1.2 *Buildings, building elements* and *sitework* shall withstand the combination of loads that they are likely to experience during *construction* or *alteration* and throughout their lives.

PERFORMANCE

B1.3.1 *Buildings, building elements* and *sitework* shall have a low probability of rupturing, becoming unstable, losing equilibrium, or collapsing during *construction* or *alteration* and throughout their lives.

B1.3.2 *Buildings, building elements* and *sitework* shall have a low probability of causing loss of *amenity* through undue deformation, vibratory response, degradation, or other physical characteristics throughout their lives, or during *construction* or *alteration* when the *building* is in use.

B1.3.3 Account shall be taken of all physical conditions likely to affect the stability of *buildings, building elements* and *sitework*, including:

(a) Self-weight,

(b) Imposed gravity loads arising from use,

(c) Temperature,

(d) Earth pressure,

(e) Water and other liquids,

(f) Earthquake,

(g) Snow,

(h) Wind,

(i) *Fire*,

Copyright Standards New Zealand

© The Crown in right of New Zealand, administered by the New Zealand Standards Executive. Access to this standard has been sponsored by the Ministry of Business, Innovation, and Employment under copyright license LN001498. You are not permitted to reproduce or distribute any part of this standard without prior written permission from Standards New Zealand, on behalf of New Zealand Standards Executive, unless your actions are covered by Part 3 of the Copyright Act 1994.

(j) Impact,

(k) Explosion,

(l) Reversing or fluctuating effects,

(m) Differential movement,

(n) Vegetation,

(o) Adverse effects due to insufficient separation from other *buildings*,

(p) Influence of equipment, services, non-structural elements and contents,

(q) Time dependent effects including creep and shrinkage, and

(r) Removal of support.

B1.3.4 Due allowance shall be made for:

(a) The consequences of failure,

(b) The intended use of the *building*,

(c) Effects of uncertainties resulting from *construction* activities, or the sequence in which *construction* activities occur,

(d) Variation in the properties of materials and the characteristics of the site, and

(e) Accuracy limitations inherent in the methods used to predict the stability of *buildings*.

B1.3.5 The demolition of *buildings* shall be carried out in a way that avoids the likelihood of premature collapse.

B1.3.6 *Sitework*, where necessary, shall be carried out to:

(a) Provide stability for *construction* on the site, and

(b) Avoid the likelihood of damage to *other property.*

B1.3.7 Any *sitework* and associated supports shall take account of the effects of:

(a) Changes in ground water level,

(b) Water, weather and vegetation, and

(c) Ground loss and slumping.

Copyright Standards New Zealand

© The Crown in right of New Zealand, administered by the New Zealand Standards Executive. Access to this standard has been sponsored by the Ministry of Business, Innovation, and Employment under copyright license LN001498. You are not permitted to reproduce or distribute any part of this standard without prior written permission from Standards New Zealand, on behalf of New Zealand Standards Executive, unless your actions are covered by Part 3 of the Copyright Act 1994.

NZBC Clause B2 DURABILITY

This Clause is extracted from the New Zealand Building Code contained in the First Schedule of the Building Regulations 1992 and amended by the Building Regulations 1997.

Provisions

OBJECTIVE

B2.1 The objective of this provision is to ensure that a *building* will throughout its life continue to satisfy the other objectives of this code.

FUNCTIONAL REQUIREMENT

B2.2 *Building* materials, components and *construction* methods shall be sufficiently durable to ensure that the *building*, without reconstruction or major renovation, satisfies the other functional requirements of this code throughout the life of the *building*.

PERFORMANCE

B2.3.1 *Building elements* must, with only normal maintenance, continue to satisfy the performance requirements of this code for the lesser of the *specified intended life* of the *building*, if stated, or:

a) The life of the building, being not less than 50 years, if:

i) Those *building elements* (including floors, walls, and fixings) provide structural stability to the *building*, or

ii) Those *building elements* are difficult to access or replace, or

iii) Failure of those *building elements* to comply with the *building code* would go undetected during both normal use and maintenance of the *building*.

b) 15 years if:

i) Those *building elements* (including the *building* envelope, exposed plumbing in the subfloor space, and in-built chimneys and flues) are moderately difficult to access or replace, or

ii) Failure of those *building elements* to comply with the *building code* would go undetected during normal use of the *building*, but would be easily detected during normal maintenance.

c) 5 years if:

i) The *building elements* (including services, linings, renewable protective coatings, and *fixtures*) are easy to access and replace, and

ii) Failure of those *building elements* to comply with the *building code* would be easily detected during normal use of the *building*.

Copyright Standards New Zealand

© The Crown in right of New Zealand, administered by the New Zealand Standards Executive. Access to this standard has been sponsored by the Ministry of Business, Innovation, and Employment under copyright license LN001498. You are not permitted to reproduce or distribute any part of this standard without prior written permission from Standards New Zealand, on behalf of New Zealand Standards Executive, unless your actions are covered by Part 3 of the Copyright Act 1994.

Limits of application

Performance B2.3.1 applies from the time of issue of the applicable *code compliance certificate*. *Building elements* are not required to satisfy a durability performance which exceeds the *specified intended life* of the building.

B2.3.2 Individual *building elements* which are components of a *building* system and are difficult to access or replace must either:

a) All have the same durability, or

b) Be installed in a manner that permits the replacement of *building elements* of lesser durability without removing *building elements* that have greater durability and are not specifically designed for removal and replacement.

Copyright Standards New Zealand

© The Crown in right of New Zealand, administered by the New Zealand Standards Executive. Access to this standard has been sponsored by the Ministry of Business, Innovation, and Employment under copyright license LN001498. You are not permitted to reproduce or distribute any part of this standard without prior written permission from Standards New Zealand, on behalf of New Zealand Standards Executive, unless your actions are covered by Part 3 of the Copyright Act 1994.

NZBC Clause E2 EXTERNAL MOISTURE

This Clause is extracted from the New Zealand Building Code contained in the First Schedule of the Building Regulations 1992.

Provisions

OBJECTIVE

E2.1 The objective of this provision is to safeguard people from illness or injury which could result from external moisture entering the *building*.

FUNCTIONAL REQUIREMENT

E2.2 *Buildings* shall be constructed to provide *adequate* resistance to penetration by, and the accumulation of, moisture from outside.

Limits on application

Requirement E2.2 shall not apply to *buildings* in which moisture from outside would result in effects which are no more harmful than those likely to arise indoors during normal use.

PERFORMANCE

E2.3.1 Roofs shall shed precipitated moisture. In locations subject to snowfalls, roofs shall also shed melted snow.

E2.3.2 Roofs and exterior walls shall prevent the penetration of water that could cause undue dampness, or damage to *building elements*.

E2.3.3 Walls, floors and structural elements in contact with the ground shall not absorb or transmit moisture in quantities that could cause undue dampness, or damage to *building elements*.

E2.3.4 *Building elements* susceptible to damage shall be protected from the adverse effects of moisture entering the space below suspended floors.

E2.3.5 *Concealed spaces* and cavities in *buildings* shall be constructed in a way which prevents external moisture being transferred and causing condensation and the degradation of *building elements*.

E2.3.6 Excess moisture present at the completion of *construction*, shall be capable of being dissipated without permanent damage to *building elements*.

Copyright Standards New Zealand

© The Crown in right of New Zealand, administered by the New Zealand Standards Executive. Access to this standard has been sponsored by the Ministry of Business, Innovation, and Employment under copyright license LN001498. You are not permitted to reproduce or distribute any part of this standard without prior written permission from Standards New Zealand, on behalf of New Zealand Standards Executive, unless your actions are covered by Part 3 of the Copyright Act 1994.

SECTION 20

INDUSTRY INFORMATION

ADDITIONAL INFORMATION (INFORMATIVE)

Consider checking with the Building Consent Authority about a particular product before specifying.

Copyright Standards New Zealand

© The Crown in right of New Zealand, administered by the New Zealand Standards Executive. Access to this standard has been sponsored by the Ministry of Business, Innovation, and Employment under copyright license LN001498. You are not permitted to reproduce or distribute any part of this standard without prior written permission from Standards New Zealand, on behalf of New Zealand Standards Executive, unless your actions are covered by Part 3 of the Copyright Act 1994.

Copyright Standards New Zealand

This section is available for users of NZS 3604 to include, for their own reference, information on commonly used proprietary products and/or systems which have the approval of the relevant *Building Consent Authority*.

Copyright Standards New Zealand

© The Crown in right of New Zealand, administered by the New Zealand Standards Executive. Access to this standard has been sponsored by the Ministry of Business, Innovation, and Employment under copyright license LN001498. You are not permitted to reproduce or distribute any part of this standard without prior written permission from Standards New Zealand, on behalf of New Zealand Standards Executive, unless your actions are covered by Part 3 of the Copyright Act 1994.

NOTES

Copyright Standards New Zealand

© The Crown in right of New Zealand, administered by the New Zealand Standards Executive. Access to this standard has been sponsored by the Ministry of Business, Innovation, and Employment under copyright license LN001498. You are not permitted to reproduce or distribute any part of this standard without prior written permission from Standards New Zealand, on behalf of New Zealand Standards Executive, unless your actions are covered by Part 3 of the Copyright Act 1994.

© The Crown in right of New Zealand, administered by the New Zealand Standards Executive. Access to this standard has been sponsored by the Ministry of Business, Innovation, and Employment under copyright license LN001498. You are not permitted to reproduce or distribute any part of this standard without prior written permission from Standards New Zealand, on behalf of New Zealand Standards Executive, unless your actions are covered by Part 3 of the Copyright Act 1994.

INDEX

	Reference	Page
A		
Anchor pile		
Definition	1.3	**1**-13
B		
Backing		
Fibre cement sheet	11.8.5	**11**-21
Non-rigid		
Fixing of	11.8.9	**11**-22
Stucco on	11.8.8	**11**-22
Plywood	11.8.4	**11**-21
Rigid		
Stucco on	11.8.3	**11**-19
Batten		
Ceiling	Table 13.1	**13**-3
Definition	1.3	**1**-13
Beams		
Connections	Figure 9.3	**9**-6
Plywood box	Figures 16.1 & 16.2	**16**-3
Ridge	Table 10.6	**10**-21
	Table 15.7	**15**-14
Strutting	10.2.1.11	**10**-25
	Table 10.7	**10**-29
	Figure 10.12	**10**-28
Verandah	10.2.1.12	**10**-30
	Table 10.8	**10**-31
	Table 15.8	**15**-16
Bearers	6.12	**6**-34
1.5 kPa floor load	Table 6.6	**6**-38
2 kPa floor load	Table 6.6	**6**-38
3 kPa floor load	Table 14.4	**14**-7
Cantilevered	6.12.4	**6**-37
Connection of anchor pile	Figure 6.10	**6**-25
Crook in	6.12.5	**6**-39
Definition	1.3	**1**-13
Fixing	Figure 6.18	**6**-37
Joints in	6.12.7	**6**-39
	Figure 6.19	**6**-40
Laminated	6.12.3	**6**-37
Landing of	6.12.6	**6**-39
Sizes	6.12.2	**6**-37
Stringers	6.13	**6**-39
BIA Accreditations	Section 18	**18**-1
BIA Approved Documents	19.2.2	**19**-4
BIA Referenced Documents	19.2.3	**19**-5
Blocks	5.1.5	**5**-3
Definition	1.3	**1**-13
Bolts	2.4.5	**2**-7
	4.4.4	**4**-8
Bottom plates		
Definition	1.3	**1**-13
Boundary joist		
Definition	1.3	**1**-13

Copyright Standards New Zealand

Braced piles
Definition ..... 1.3 ..... **1**-13
Brace runner
Definition ..... 1.3 ..... **1**-13
Bracing ..... 7.4.2 ..... **7**-20
Decks ..... 5.4.7 ..... **5**-18
Definition ..... 1.3 ..... **1**-13
Distribution ..... 5.5.3 ..... **5**-18
Stacked ..... 5.4.5 ..... **5**-18
Subfloor ..... 5.4.2 ..... **5**-16
5.4.3 ..... **5**-16
Wall ..... 5.5.1 ..... **5**-18
5.5.2 ..... **5**-18
Capacity ..... 5.5.6 ..... **5**-20
Bracing capacity
Definition ..... 1.3 ..... **1**-13
Bracing demand ..... 5.1.2 ..... **5**-3
Tables 14.1 – 14.3 ..... **14**-4 – **14**-6
Definition ..... 1.3 ..... **1**-13
Earthquake ..... 5.3 ..... **5**-6
Tables 5.8 – 5.10 ..... **5**-13 – **5**-15
Determination of ..... 5.3.3 ..... **5**-11
Wind ..... 5.2 ..... **5**-3
Tables 5.5 – 5.7 ..... **5**-8 – **5**-10
Ground roughness ..... 5.2.3 ..... **5**-4
Bracing design
Chimneys
Masonry and concrete ..... 5.3.4 ..... **5**-11
Objective ..... 5.1.4 ..... **5**-3
Subfloor ..... 5.4 ..... **5**-16
Wall ..... 5.5 ..... **5**-18
Bracing elements
Reinforced concrete masonry ..... 8.3.2 ..... **8**-4
Bracing line ..... Figure 5.5 ..... **5**-19
Definition ..... 1.3 ..... **1**-14
Bracing rating
Definition ..... 1.3 ..... **1**-14
Bracing systems
Roof ..... Table 10.1 ..... **10**-4
Bracing units
Definition ..... 1.3 ..... **1**-14
Brick ties
Protection for ..... Table 4.4 ..... **4**-10
Building paper ..... 11.8.7 ..... **11**-22
Building product appraisals ..... Section 18 ..... **18**-1
Buildings ..... 1.1.2 ..... **1**-3
Classification of ..... Table 1.1 ..... **1**-6
Buildings covered by this Standard ..... Figure 1.2 ..... **1**-11

C

Call dimensions
Definition ..... 1.3 ..... **1**-14
Cantilevered foundation walls
Definition ..... 1.3 ..... **1**-14
Cantilevered piles
Definition ..... 1.3 ..... **1**-14

© The Crown in right of New Zealand, administered by the New Zealand Standards Executive. Access to this standard has been sponsored by the Ministry of Business, Innovation, and Employment under copyright license LN001498. You are not permitted to reproduce or distribute any part of this standard without prior written permission from Standards New Zealand on behalf of New Zealand Standards Executive, unless your actions are covered by Part 3 of the Copyright Act 1994.

Copyright Standards New Zealand

© The Crown in right of New Zealand, administered by the New Zealand Standards Executive. Access to this standard has been sponsored by the Ministry of Business, Innovation, and Employment under copyright license LN001498. You are not permitted to reproduce or distribute any part of this standard without prior written permission from Standards New Zealand, on behalf of New Zealand Standards Executive, unless your actions are covered by Part 3 of the Copyright Act 1994.

Capacity
- Definition ... 1.3 ... **1**-14

Ceilings
- Bracing ... Figures 10.22 - 10.24 ... **10**-46 – **10**-48
- Diaphragm ... Figure 13.4 ... **13**-8
- Joists ... Figure 10.8 ... **10**-19
- Linings ... 13.1 ... **13**-3
- Lining supports ... Figure 13.1 ... **13**-4
- Openings in ... 13.3 ... **13**-5
  - Figure 13.2 ... **13**-6
- Runners ... Figure 10.9 ... **10**-20

Ceiling batten
- Definition ... 1.3 ... **1**-14

Ceiling diaphragms ... Figure 13.4 ... **13**-8
- Structural ... 13.5 ... **13**-7

Ceiling runner
- Definition ... 1.3 ... **1**-14

Claddings
- Clearance between ... Figure 6.21 ... **6**-42
- Definition ... 1.3 ... **1**-14
- Roof ... 11.3 ... **11**-3
  - Table 11.2 ... **11**-6
- Timber weatherboards ... 11.5.2 ... **11**-7
- Wall ... 11.5 ... **11**-7
  - Table 11.3 ... **11**-8

Cleared ground level
- Definition ... 1.3 ... **1**-14

Cleats ... 10.2.1.13 ... **10**-30
  - Figure 10.14 ... **10**-33
- Definition ... 1.3 ... **1**-14

Collar tie ... Figure 10.13 ... **10**-33
- Definition ... 1.3 ... **1**-14

Concrete ... 4.8 ... **4**-10
  - 10.1.5 ... **10**-3
- Cover ... 4.8.1 ... **4**-10
- Masonry ... 4.8.3 ... **4**-10
- Reinforced ... 8.3.2 ... **8**-4
- Strength ... 4.8.2 ... **4**-10

Concrete blinding
- Definition ... 1.3 ... **1**-14

Concrete slab bay
- Definition ... 1.3 ... **1**-14

Concrete slab construction joint
- Definition ... 1.3 ... **1**-14

Concrete slab free joint
- Definition ... 1.3 ... **1**-15

Amd 1 Dec '00
Concrete slab shrinkage control joint
- Definition ... 1.3 ... **1**-15

Connections
- Beam ... Figure 9.3 ... **9**-6
- Footing ... Figure 9.2 ... **9**-5
- Post ... Figures 9.2 and 9.3 ... **9**-5 & **9**-6

Construction requirements ... 1.1.1 ... **1**-3

Couple-close roof
- Definition ... 1.3 ... **1**-15

Curtailed joist
- Definition ... 1.3 ... **1**-15

Copyright Standards New Zealand

D

D
Definition ..... 1.3 ..... **1**-15
Damp-proof course
Definition ..... 1.3 ..... **1**-15
Damp-proof membrane
Definition ..... 1.3 ..... **1**-15
Dampness
Prevention of ..... 6.14 ..... **6**-41
Decks
Bracing ..... 7.4.2 ..... **7**-20
Surface ..... 7.4.4 ..... **7**-20
Timber ..... 7.4 ..... **7**-20
Deep joist
Definition ..... 1.3 ..... **1**-15
Diagonal brace
Definition ..... 1.3 ..... **1**-15
Diaphragms ..... 5.6 ..... **5**-20
Ceiling ..... Figure 13.4 ..... **13**-8
Definition ..... 1.3 ..... **1**-15
Ground floor ..... 7.3.3 ..... **7**-19
Structural floor ..... 7.3 ..... **7**-19
Upper floor ..... 7.3.4 ..... **7**-19
Dimensions
Loaded, definition ..... 1.3 ..... **1**-17
Dragon ties ..... 8.3.3 ..... **8**-4
Figure 8.1 ..... **8**-5
Definition ..... 1.3 ..... **1**-15
Driven timber pile
Definition ..... 1.3 ..... **1**-15
Dwangs ..... 8.8 ..... **8**-37
Definition ..... 1.3 ..... **1**-15

E

Earthquake
Bracing demand ..... Tables 5.8 – 5.10 ..... **5**-13 – **5**-15
Eaves bearer
Definition ..... 1.3 ..... **1**-15
Eaves ..... 10.2.1.14 ..... **10**-32
Expansive soils
Building sites of ..... 17.2 ..... **17**-3
Foundations supported on ..... 17.3 ..... **17**-3
Reinforcement ..... 17.4 ..... **17**-3
Exposure zones
Classification of ..... 4.2 ..... **4**-3
External walls
Definition ..... 1.3 ..... **1**-15

F

Fabrication ..... 2.4 ..... **2**-4
Fastenings ..... 2.4 ..... **2**-4
Steel ..... 4.4 ..... **4**-6
Finished ground level
Definition ..... 1.3 ..... **1**-15
Fixings
In stucco ..... 4.6 ..... **4**-9
Steel ..... 4.4 ..... **4**-6

Copyright Standards New Zealand

© The Crown in right of New Zealand, administered by the New Zealand Standards Executive. Access to this standard has been sponsored by the Ministry of Business, Innovation, and Employment under copyright license LN001498. You are not permitted to reproduce or distribute any part of this standard without prior written permission from Standards New Zealand, on behalf of New Zealand Standards Executive, unless your actions are covered by Part 3 of the Copyright Act 1994.

© The Crown in right of New Zealand, administered by the New Zealand Standards Executive. Access to this standard has been sponsored by the Ministry of Business, Innovation, and Employment under copyright license LN001498. You are not permitted to reproduce or distribute any part of this standard without prior written permission from Standards New Zealand, on behalf of New Zealand Standards Executive, unless your actions are covered by Part 3 of the Copyright Act 1994.

Fixings and fastenings
- Steel ... Table 4.1 ... **4**-7

Flashings ... 4.10 ... **4**-11
- Exposed ... 4.10.3 ... **4**-11
- Hidden ... 4.10.2 ... **4**-11

Flat roof
- Definition ... 1.3 ... **1**-15

Flooring ... 7.2 ... **7**-15
- Table 7.3 ... **7**-15
- Basic live load ... Table 1.2 ... **1**-6
- Concrete slab-on-ground ... 7.5 ... **7**-21
  - 7.5.8 ... **7**-29
  - Damp-proof membrane ... 7.5.4 ... **7**-25
    - Bituminous ... 7.5.5 ... **7**-27
    - Polyethylene ... 7.5.6 ... **7**-28
    - Rubber emulsion ... 7.5.7 ... **7**-28
  - Granular base ... 7.5.3 ... **7**-24
- Installation ... 7.2.1 ... **7**-15
- Strip ... Table 14.9 ... **14**-9A
- Structural plywood ... Table 7.4 ... **7**-17
  - Table 14.16 ... **14**-14
- Timber strip ... 7.2.2 ... **7**-15
- Wood-based sheet ... 7.2.3 ... **7**-17

Floors
- Concrete slab-on-ground ... 7.5 ... **7**-21
  - 7.5.8 ... **7**-29
- Construction of ground slabs ... Figure 7.16 ... **7**-29
- Diaphragms ... Figure 7.9 ... **7**-18
- Framed ... 13.2.2 ... **13**-3
- Irregular slab ... Figure 7.17 ... **7**-30
- Openings in ... Figure 7.7 ... **7**-14
- Slab-on-ground ... Figures 7.10 and 7.11 ... **7**-22
  - Masonry veneer foundation edge details ... Figures 7.14 and 7-15 ... **7**-26 & **7**-27
  - Timber fixing to ... 7.5.12 ... **7**-33
- Thermal insulation under ... 7.5.10 ... **7**-32

Floors and stairs
- Basic live load ... Table 1.2 ... **1**-6

Floor load
- Definition ... 1.3 ... **1**-16

Floor slabs
- Irregular ... Figure 7.17 ... **7**-30

Footings
- Bearing of ... 7.5.9 ... **7**-31
- Definition ... 1.3 ... **1**-16
- Pile ... Table 6.1 ... **6**-8
- Post concrete ... Table 9.1 ... **9**-3

Foundation edge
- Construction ... 7.5.2 ... **7**-21
  - Concrete masonry ... Figure 7.13 ... **7**-24
  - In situ concrete ... Figure 7.12 ... **7**-23
- Relationship to sloping ground surface ... Figure 3.1 ... **3**-3

Foundations
- Definition ... 1.3 ... **1**-16

Foundation walls ... Figure 6.11 ... **6**-28
- Bearers in line ... Figure 6.18 ... **6**-37
- Bearers perpendicular ... Figure 6.17 ... **6**-36

Copyright Standards New Zealand

Foundation walls *(continued)*
Cantilevered ..... Figure 6.13 ..... **6**-31
Definition ..... 1.3 ..... **1**-16
Fixing of stringers ..... Figure 6.20 ..... **6**-40
Fixing of wall plates ..... Figure 6.16 ..... **6**-35
Footings ..... Table 6.4 ..... **6**-30
Openings and steps ..... Figure 6.12 ..... **6**-29
Reinforced concrete masonry ..... Figure 6.14 ..... **6**-32
Reinforced masonry and reinforced
concrete masonry ..... Figure 6.15 ..... **6**-33
Framing
Gable end walls ..... Figure 8.2 ..... **8**-12
Gable verge ..... Figure 10.15 ..... **10**-34
Relocated buildings ..... 6.1.2 ..... **6**-3
Subfloor bracing ..... 6.3.3 ..... **6**-4
Subfloor systems ..... 6.2 ..... **6**-3
Horizontal support ..... 6.2.2 ..... **6**-4
Vertical support ..... 6.2.1 ..... **6**-3
Framing timbers
Definition ..... 1.3 ..... **1**-16
Protection ..... Figure 2.1 ..... **2**-5

G

Gable
Definition ..... 1.3 ..... **1**-16
Gable verges ..... 10.2.1.15 ..... **10**-32
Figure 10-15 ..... **10**-34
Good ground
Definition ..... 1.3 ..... **1**-16
Ground level
Definition ..... 1.3 ..... **1**-16

H

Heavy roof
Definition ..... 1.3 ..... **1**-16
Heavy wall cladding
Definition ..... 1.3 ..... **1**-16
Herringbone strutting
Definition ..... 1.3 ..... **1**-16
Hip rafter
Definition ..... 1.3 ..... **1**-16
Horizontal loads
Systems to resist ..... 8.3 ..... **8**-3

I

Industry information ..... Section 20 ..... **20**-1
Interior linings ..... Section 12 ..... **12**-1
Internal walls
Definition ..... 1.3 ..... **1**-17

J

Jack rafter
Definition ..... 1.3 ..... **1**-17
Jack studs
Definition ..... 1.3 ..... **1**-17
Fixing ..... Figure 6.3 ..... **6**-11

© The Crown in right of New Zealand, administered by the New Zealand Standards Executive. Access to this standard has been sponsored by the Ministry of Business, Innovation, and Employment under copyright license LN001498. You are not permitted to reproduce or distribute any part of this standard without prior written permission from Standards New Zealand, on behalf of New Zealand Standards Executive, unless your actions are covered by Part 3 of the Copyright Act 1994.

Copyright Standards New Zealand

© The Crown in right of New Zealand, administered by the New Zealand Standards Executive. Access to this standard has been sponsored by the Ministry of Business, Innovation, and Employment under copyright license LN001498. You are not permitted to reproduce or distribute any part of this standard without prior written permission from Standards New Zealand, on behalf of New Zealand Standards Executive, unless your actions are covered by Part 3 of the Copyright Act 1994.

Joinery
- Exterior ..... 11.6 ..... **11**-9
- Roof hatches ..... 11.6.2 ..... **11**-9
- Roof lights ..... 11.6.2 ..... **11**-9
- Skylights ..... 11.6.2 ..... **11**-9
- Windows and doors ..... 11.6.1 ..... **11**-9

Joists
- Butted ..... Figure 7.1 ..... **7**-5
- Cantilevered ..... Table 7.2 ..... **7**-11
- 0 Ceiling ..... Table 10.4 ..... **10**-18A
  - Figure 10.8 ..... **10**-19
  - Figure 13.2 ..... **13**-6
- Connection of anchor pile ..... Figure 6.9 ..... **6**-24
- Definition ..... 1.3 ..... **1**-17
- Floor ..... 7.1 ..... **7**-3
  - Table 7.1 ..... **7**-4
  - Table 14.8 ..... **14**-9
  - Cantilevered ..... 7.1.5 ..... **7**-10
  - Connected to foundation walls ..... 7.1.4 ..... **7**-9
  - Holes and notches in ..... 7.1.7 ..... **7**-13
  - Figure 7.8 ..... **7**-16
  - Lateral support ..... 7.1.2 ..... **7**-6
  - Under walls ..... 7.1.3 ..... **7**-6
- Lapped ..... Figure 7.1 ..... **7**-5
- Lapped cantilevered ..... Figure 7.6 ..... **7**-12
- Layout criteria ..... Figure 7.2 ..... **7**-7

L

Light roof
- Definition ..... 1.3 ..... **1**-17

Light wall cladding
- Definition ..... 1.3 ..... **1**-17

Linings
- Ceiling ..... 13.1 ..... **13**-3
- Definition ..... 1.3 ..... **1**-17
- Interior ..... Section 12 ..... **12**-3
- Support of ceiling ..... 13.2 ..... **13**-3
  - Figure 13.1 ..... **13**-4

Lintels ..... 8.6.1 ..... **8**-18
- Table 16.1 ..... **16**-3
- Figure 8.5 ..... **8**-15
- Figures 8.7 – 8.11 ..... **8**-19A – **8**-23
- 3 kPa floor load ..... Table 15.5 ..... **15**-7
- Definition ..... 1.3 ..... **1**-17
- Fixing of ..... Figure 8.12 ..... **8**-25
- Heavy roof ..... Table 8.14 ..... **8**-26
- Light roof ..... Table 8.14 ..... **8**-26
- Load cases ..... Table 14.11 ..... **14**-11
  - Table 15.1 ..... **15**-5
- Plywood box beam ..... 16.1 ..... **16**-3
  - Table 16.1 ..... **16**-3
- Protection for ..... Table 4.4 ..... **4**-10
- Supporting brick ..... 4.5 ..... **4**-9
- Supporting floor only ..... Table 14.14 ..... **14**-12A
- Supporting roof only ..... Table 15.2 ..... **15**-5A
- Supporting roof and wall ..... Tables 15.3 and 15.4 ... **15**-6A – **15**-6C

Copyright Standards New Zealand

Lintels *(continued)*

Supporting roof, wall and floor ..... Table 14.12 ..... **14**-11
Table 15.5 ..... **15**-7
Supporting wall and floor only ..... Table 14.13 ..... **14**-12
Loadbearing stud
Definition..... 1.3..... **1**-17
Loadbearing walls
Definition..... 1.3..... **1**-17
Ground slabs ..... Figure 7.19 ..... **7**-33
Over foundation ..... Figure 7.4 ..... **7**-9
Subfloor support ..... Figure 7.3 ..... **7**-8
Support..... Figure 6.1 ..... **6**-5
Top and bottom plates..... Table 14.15 ..... **14**-13
Loaded dimension
Definition..... 1.3..... **1**-17

M

M
Definition..... 1.3..... **1**-17
M12 bolts
Spacing..... Table 6.7 ..... **6**-39
Table 14.7 ..... **14**-8
Material
Compatibility..... Table 4.5 ..... **4**-12
Dimension ..... 2.1..... **2**-3
Member span
Definition..... 1.3..... **1**-17
Metal angle waling
Definition..... 1.3..... **1**-18

N

Nailing schedule..... 6.15..... **6**-41
7.6..... **7**-33
Table 6.8 ..... **6**-42
Table 7.5 ..... **7**-34
Table 8.19 ..... **8**-39
Table 10.14 ..... **10**-54
Nails
Materials for..... Table 4.3 ..... **4**-9
Type of..... Table 4.3 ..... **4**-9
Natural ground level
Definition..... 1.3..... **1**-18
Nogging
Definition..... 1.3..... **1**-18
Non-loadbearing stud
Definition..... 1.3..... **1**-18
Non-loadbearing wall
Definition..... 1.3..... **1**-18
Support..... Figure 7.5 ..... **7**-10
NZBC
Definition..... 1.3..... **1**-18
NZBC Clause B1 Structure..... Section 19..... **19**-6
NZBC Clause B2 Durability..... Section 19..... **19**-8
NZBC Clause E2 External moisture ..... Section 19..... **19**-10

© The Crown in right of New Zealand, administered by the New Zealand Standards Executive. Access to this standard has been sponsored by the Ministry of Business, Innovation, and Employment under copyright license LN001498. You are not permitted to reproduce or distribute any part of this standard without prior written permission from Standards New Zealand, on behalf of New Zealand Standards Executive, unless your actions are covered by Part 3 of the Copyright Act 1994.

Copyright Standards New Zealand

© The Crown in right of New Zealand, administered by the New Zealand Standards Executive. Access to this standard has been sponsored by the Ministry of Business, Innovation, and Employment under copyright license LN001498. You are not permitted to reproduce or distribute any part of this standard without prior written permission from Standards New Zealand, on behalf of New Zealand Standards Executive, unless your actions are covered by Part 3 of the Copyright Act 1994.

O

Ordinary piles
- Definition ..... 1.3 ..... **1**-18

P

Part storey
- Definition ..... 1.3 ..... **1**-18

Pile footings ..... Table 6.1 ..... **6**-8
- Square ..... Table 14.6 ..... **14**-8

Piles ..... 6.4 ..... **6**-4
- Anchor ..... 6.9 ..... **6**-23
  - Figure 6.9 ..... **6**-24
  - Figure 6.10 ..... **6**-25
  - Depth ..... 6.9.2 ..... **6**-23
  - Fixings ..... 6.9.3 ..... **6**-23
  - Height ..... 6.9.1 ..... **6**-23
- Brace connections ..... 6.8.4 ..... **6**-21
- Braced ..... 6.8 ..... **6**-16
  - Figures 6.6 – 6.8 ..... **6**-18 – **6**-20
  - Bearer fixings ..... 6.8.5 ..... **6**-22
  - Height ..... 6.8.2 ..... **6**-21
  - Joist fixings ..... 6.8.6 ..... **6**-22
- Cantilever ..... 6.7 ..... **6**-16
  - Figure 6.5 ..... **6**-17
  - Fixings ..... 6.7.3 ..... **6**-16
  - Limitations in size ..... 6.7.2 ..... **6**-16
- Cross sections ..... 6.4.2 ..... **6**-5
- Definition ..... 1.3 ..... **1**-18
- Diagonal timber braced ..... 6.8.3 ..... **6**-21
- Driven round timber ..... Table 6.2 ..... **6**-13
- Driven timber ..... 6.6 ..... **6**-10
  - Figure 6.4 ..... **6**-12
  - Driving of piles ..... 6.6.4 ..... **6**-15
  - Driving resistance ..... 6.6.5 ..... **6**-15
  - Limitations in length ..... 6.6.1 ..... **6**-10
  - Soil bearing capacity ..... 6.6.2 ..... **6**-10
  - Spacing ..... 6.6.3 ..... **6**-10
  - Tolerances ..... 6.6.6 ..... **6**-15
- Footings ..... 6.4.5 ..... **6**-6
  - Table 6.1 ..... **6**-8
- Height ..... 6.4.1 ..... **6**-4
- Materials ..... 6.4.3 ..... **6**-6
- Ordinary ..... 6.5 ..... **6**-18
  - Figures 6.2 and 6.3 ..... **6**-9 & **6**-11
  - Fixings ..... 6.5.2 ..... **6**-8
  - Height ..... 6.5.1 ..... **6**-8
- Reinforcement ..... 6.4.4 ..... **6**-6

Pitched roof
- Definition ..... 1.3 ..... **1**-18

Plates ..... 8.7 ..... **8**-27
- Bottom ..... 8.7.2 ..... **8**-30
- Definition ..... 1.3 ..... **1**-18
- Holes and checks in ..... 8.7.5 ..... **8**-36
- Joints in ..... 8.7.3 ..... **8**-30
- Top ..... Figure 8.13 ..... **8**-30
  - Figures 8.14 – 8.20 ..... **8**-32 – **8**-36
  - 8.7.1 ..... **8**-27
  - Lateral support of ..... 8.7.4 ..... **8**-34

Copyright Standards New Zealand

Plywood
Thickness ..... Table 11.6 ..... **11**-21
Posts
Concrete footings ..... Table 9.1 ..... **9**-3
Connections ..... 9.3 ..... **9**-3
Definition ..... 1.3 ..... **1**-18
Secured against uplift ..... 9.2 ..... **9**-3
Purlins ..... 10.2.1.16 ..... **10**-38
Table 10.9 ..... **10**-36
Figures 10.18 – 10.20. **10**-39 & **10**-40
Definition ..... 1.3 ..... **1**-18

R

Definition ..... 1.3 ..... **1**-18
Rafters ..... Table 10.2 ..... **10**-9
Table 15.6 ..... **15**-8
Definition ..... 1.3 ..... **1**-18
Dummy ..... 10.2.1.17 ..... **10**-39
Spacing of fixings ..... Table 10.11 ..... **10**-41
Fixing ..... Figure 10.2 ..... **10**-6
Figure 10-6 ..... **10**-16
Hip ..... Figure 10.1 ..... **10**-5
Spans ..... Figure 10.3 ..... **10**-7
Regions
Wind ..... 5.2.2 ..... **5**-3
Reinforcement
Definition ..... 1.3 ..... **1**-18
Reinforcing
In stucco ..... 4.6 ..... **4**-9
Lap lengths ..... Table 6.5 ..... **6**-31
Ribbon board ..... Figure 8.21 ..... **8**-38
Definition ..... 1.3 ..... **1**-18
Ridge beam
Definition ..... 1.3 ..... **1**-18
Ridge board ..... Figure 10.1 ..... **10**-5
Definition ..... 1.3 ..... **1**-19
Roofs
Brace ..... Figures 10.25 & 10.26 **10**-50 & **10**-51
Bracing details ..... 10.4 ..... **10**-48
Diagonal ..... 10.4.2 ..... **10**-49
10.4.3 ..... **10**-49
Bracing systems ..... Table 10.1 ..... **10**-4
Definition ..... 1.3 ..... **1**-19
Fixing types ..... Table 10.13 ..... **10**-44
Framed ..... 10.2.1 ..... **10**-4
13.2.2 ..... **13**-3
Ceiling joists ..... 10.2.1.6 ..... **10**-17
Ceiling runners ..... 10.2.1.7 ..... **10**-19
Cleats ..... 10.2.1.13 ..... **10**-30
Collar ties ..... 10.2.1.13 ..... **10**-30
Eaves ..... 10.2.1.14 ..... **10**-32
Gable verges ..... 10.2.1.15 ..... **10**-32
Joints ..... 10.2.1.2 ..... **10**-5
Rafters ..... 10.2.1.3 ..... **10**-6
Ridge boards ..... 10.2.1.4 ..... **10**-16
Strutting beams ..... 10.2.1.11 ..... **10**-25
Underpurlins ..... 10.2.1.9 ..... **10**-20
Underpurlin struts ..... 10.2.1.10 ..... **10**-25

Copyright Standards New Zealand

© The Crown in right of New Zealand, administered by the New Zealand Standards Executive. Access to this standard has been sponsored by the Ministry of Business, Innovation, and Employment under copyright license LN001498. You are not permitted to reproduce or distribute any part of this standard without prior written permission from Standards New Zealand, on behalf of New Zealand Standards Executive, unless your actions are covered by Part 3 of the Copyright Act 1994.

© The Crown in right of New Zealand, administered by the New Zealand Standards Executive. Access to this standard has been sponsored by the Ministry of Business, Innovation, and Employment under copyright license LN001498. You are not permitted to reproduce or distribute any part of this standard without prior written permission from Standards New Zealand, on behalf of New Zealand Standards Executive, unless your actions are covered by Part 3 of the Copyright Act 1994.

Roofs *(continued)*

Valley boards ..... 10.2.1.8 ..... **10**-20
Verandah ..... 10.2.12 ..... **10**-30
Gable ..... Figure 10.16 ..... **10**-37
Heavy hip ..... Figure 10.22 ..... **10**-46
Hip and valley ..... Figure 10.17 ..... **10**-38
Horizontal loads ..... 10.1.4 ..... **10**-3
10.3 ..... **10**-45
Heavy gable ..... 10.3.5 ..... **10**-47
Heavy hip ..... 10.3.3 ..... **10**-45
Light gable ..... 10.3.4 ..... **10**-46
Light hip ..... 10.3.2 ..... **10**-45
Systems to resist ..... 10.3 ..... **10**-45
Nailing schedule ..... 10.5 ..... **10**-53
Sheet sarked ..... Figure 10.27 ..... **10**-53
Supported by post ..... Figure 9.1 ..... **9**-4
System ..... 10.1.2 ..... **10**-3
Trusses ..... 10.2.2 ..... **10**-41
13.2.1 ..... **13**-3
Anchorage 10.2.2.6 ..... **10**-43
Connection to internal walls 10.2.2.5 ..... **10**-42
Design and fabrication ..... 10.2.2.1 ..... **10**-41
Drawings & specifications ..... 10.2.2.3 ..... **10**-41
Handling, transport & erection ..... 10.2.2.4 ..... **10**-42
Vertical loads ..... 10.2 ..... **10**-4
Water tanks in ..... 13.4 ..... **13**-6
Roof strut
Definition ..... 1.3 ..... **1**-19
Roof trusses ..... Table 10.12 ..... **10**-44
Runners
Ceiling ..... Table 10.5 ..... **10**-19A
Definition ..... 1.3 ..... **1**-19

S

Sarking
Definition ..... 1.3 ..... **1**-19
Scope of NZS 3604 ..... 1.1 ..... **1**-3
Figure 1.1 ..... **1**-7
Screws ..... 2.4.5 ..... **2**-7
Sealant
Usage and durability ..... 4.9 ..... **4**-11
Sheathings ..... 11.4 ..... **11**-3
Table 11.1 ..... **11**-4
Definition ..... 1.3 ..... **1**-19
Sheet
Polystyrene ..... 11.8.6 ..... **11**-21
Sill trimmer
Definition ..... 1.3 ..... **1**-19
Site
Preparation ..... 3.5 ..... **3**-7
Profile requirements ..... 3.1 ..... **3**-3
Site exposure ..... 5.2.4 ..... **5**-6
Skillion roof
Definition ..... 1.3 ..... **1**-19

Copyright Standards New Zealand

Slabs
Ground ..... Figure 7.16 ..... **7**-29
Figure 7.19 ..... **7**-33
Irregular ..... Figure 7.17 ..... **7**-30
Sleeper
Definition ..... 1.3 ..... **1**-19
Snow
Classification ..... 15.2 ..... **15**-3
Soil
Bearing ..... 3.4 ..... **3**-6
Bearing capacity ..... 3.1 ..... **3**-3
Test ..... 3.3 ..... **3**-5
Types ..... 3.2 ..... **3**-4
Expansive ..... 3.2.1 ..... **3**-4
Soft clay ..... 3.2.1 ..... **3**-4
Soft peat ..... 3.2.1 ..... **3**-4
Soffit bearer
Definition ..... 1.3 ..... **1**-19
Soffit plate
Definition ..... 1.3 ..... **1**-19
Spaced
Definition ..... 1.3 ..... **1**-19
Spacing
Definition ..... 1.3 ..... **1**-19
Span
Definition ..... 1.3 ..... **1**-19
Specific engineering design
Definition ..... 1.3 ..... **1**-19
Sprocket
Definition ..... 1.3 ..... **1**-19
Storeys
Definition ..... 1.3 ..... **1**-19
Stringers
Definition ..... 1.3 ..... **1**-19
Struts
Definition ..... 1.3 ..... **1**-19
Underpurlin ..... 10.2.1.10 ..... **10**-25
Strutting
Definition ..... 1.3 ..... **1**-19
Strutting beam
Definition ..... 1.3 ..... **1**-19
Studs ..... 8.5 ..... **8**-6
Figure 8.4 ..... **8**-14
Definition ..... 1.3 ..... **1**-20
Lateral support of ..... 8.5.4 ..... **8**-17
Loadbearing walls ..... Table 8.2 ..... **8**-7
Table 8.3 ..... **8**-10C
Table 14.10 ..... **14**-10
Non-loadbearing walls ..... Table 8.4 ..... **8**-11
Spacing adjustment factor ..... 8.5.5 ..... **8**-17
Table 8.6 ..... **8**-18
Straightening ..... 8.5.3 ..... **8**-14
Figure 8.6 ..... **8**-17
Subfloor jack ..... Table 6.3 ..... **6**-26
Table 14.5 ..... **14**-7A
Trimming ..... 8.5.2 ..... **8**-14
Table 8.5 ..... **8**-16
Figure 8.5 ..... **8**-15

Copyright Standards New Zealand

© The Crown in right of New Zealand, administered by the New Zealand Standards Executive. Access to this standard has been sponsored by the Ministry of Business, Innovation, and Employment under copyright license LN001498. You are not permitted to reproduce or distribute any part of this standard without prior written permission from Standards New Zealand, on behalf of New Zealand Standards Executive, unless your actions are covered by Part 3 of the Copyright Act 1994.

Subfloor brace
Definition ..... 1.3 ..... **1**-20
Subfloor bracing elements
Bracing capacity ratings ..... Table 5.11 ..... **5**-17
Subfloor spaces
Water in ..... 3.6 ..... **3**-7
Support
Definition ..... 1.3 ..... **1**-20

T

The Building Act ..... 19.1.1 ..... **19**-3
The NZ Building Code ..... 19.2.1 ..... **19**-4
Ties
Brick veneer ..... 4.5 ..... **4**-9
Table 4.4 ..... **4**-10
Collar ..... 10.2.1.13 ..... **10**-30
Dragon ..... 8.3.3 ..... **8**-4
Tile batten
Definition ..... 1.3 ..... **1**-20
Timber ..... 4.3.3 ..... **4**-6
Decks ..... 4.3.5 ..... **4**-6
Timber connectors ..... 2.4.6 ..... **2**-6
Timber fixings ..... 2.4.6 ..... **2**-6
Timber floor framing
Nailing schedule ..... 7.6 ..... **7**-33
Timber plate connections ..... 2.4.7 ..... **2**-7
Timber products ..... 2.3 ..... **2**-3
4.3 ..... **4**-3
Tolerances ..... 2.2 ..... **2**-3
Masonry veneer ..... Table 11.5 ..... **11**-16
Timber framing ..... Table 2.1 ..... **2**-3
Topographic class ..... 5.2.5 ..... **5**-6
Table 5.3 ..... **5**-7
Top plates
Checking and boring ..... Figure 8.19 ..... **8**-36
Connecting ..... Figures 8.14 – 8.17 ..... **8**-32 – **8**-35
Cut ..... Figure 8-20 ..... **8**-36
Definition ..... 1.3 ..... **1**-20
Fixing ..... Table 8.18 ..... **8**-37
Strengthening ..... Figure 8.13 ..... **8**-30
Figure 8.18 ..... **8**-35
Trimming joist ..... 7.1.6 ..... **7**-12
Definition ..... 1.3 ..... **1**-20
Trimmers ..... 7.1.6 ..... **7**-12
Definition ..... 1.3 ..... **1**-12
Sill and head ..... 8.6.2 ..... **8**-24
Table 8.15 ..... **8**-27
Trimming joist ..... 7.1.6 ..... **7**-12
Definition ..... 1.3 ..... **1**-20
Trimming studs
Definition ..... 1.3 ..... **1**-20
Truss
Connections ..... Figure 10.21 ..... **10**-43

© The Crown in right of New Zealand, administered by the New Zealand Standards Executive. Access to this standard has been sponsored by the Ministry of Business, Innovation, and Employment under copyright license LN001498. You are not permitted to reproduce or distribute any part of this standard without prior written permission from Standards New Zealand, on behalf of New Zealand Standards Executive, unless your actions are covered by Part 3 of the Copyright Act 1994.

Copyright Standards New Zealand

U

Underlays ..... Table 11.1 ..... **11**-4
Roof cladding ..... 11.2 ..... **11**-3
Wall cladding ..... 11.4 ..... **11**-3
Underpurlins ..... Table 10.6 ..... **10**-21
Table 15.7 ..... **15**-14
Figure 10.13 ..... **10**-33
Definition ..... 1.3 ..... **1**-20
Underpurlin strut ..... Figures 10.10 & 10.11 **10**-26 & **10**-27
Definition ..... 1.3 ..... **1**-20

V

Valley board
Definition ..... 1.3 ..... **1**-20
Valley rafter
Definition ..... 1.3 ..... **1**-20
Veneer
Cavity ..... Figure 11.2 ..... **11**-14
Construction ..... Figure 11.1 ..... **11**-11
Flashing details ..... Figure 11.3 ..... **11**-17
Vertical loads
Systems to resist ..... 8.2 ..... **8**-3

W

Walings ..... 8.8 ..... **8**-37
Definition ..... 1.3 ..... **1**-20
Wall bracing elements ..... Table 8.1 ..... **8**-4
Definition ..... 1.3 ..... **1**-20
Wall covering
Backing details ..... Figure 11.4 ..... **11**-20
Masonry veneer ..... 11.7 ..... **11**-10
Cavities ..... 11.7.4 ..... **11**-13
Flashings ..... 11.7.7 ..... **11**-15
Foundation ..... 11.7.3 ..... **11**-10
Openings ..... 11.7.6 ..... **11**-15
Tolerances ..... 11.7.8 ..... **11**-15
Wall ties ..... 11.7.5 ..... **11**-13
Solid plaster exterior ..... 11.8 ..... **11**-19
Timber framing ..... 11.8.2 ..... **11**-19
Wall framing ..... Figure 8.3 ..... **8**-12
Wall plate
Definition ..... 1.3 ..... **1**-20
Walls
Braced ..... Figure 5.3 ..... **5**-9
Bracing ..... 5.5.4 ..... **5**-18
6.3.2 ..... **6**-4
Definition ..... 1.3 ..... **1**-20
Foundation ..... 6.11 ..... **6**-27
Fixing wall plates ..... 6.11.9 ..... **6**-34
Footings ..... 6.11.4 ..... **6**-29
Height ..... 6.11.2 ..... **6**-27
Lateral support ..... 6.11.5 ..... **6**-30
Materials ..... 6.11.6 ..... **6**-30
Reinforced ..... 6.11.7 ..... **6**-31

Copyright Standards New Zealand

© The Crown in right of New Zealand, administered by the New Zealand Standards Executive. Access to this standard has been sponsored by the Ministry of Business, Innovation, and Employment under copyright license LN001498. You are not permitted to reproduce or distribute any part of this standard without prior written permission from Standards New Zealand, on behalf of New Zealand Standards Executive, unless your actions are covered by Part 3 of the Copyright Act 1994.

Walls *(continued)*

Subfloor bracing ..... 6.11.8 ..... **6**-35
Width ..... 6.11.3 ..... **6**-29
Framing subfloor ..... 6.10 ..... **6**-24
Jackstud ..... 6.10.2 ..... **6**-24
Stud ..... 6.10.1 ..... **6**-24
Loadbearing ..... Figure 7.4 ..... **7**-9
Ground slabs ..... Figure 7.19 ..... **7**-33
Internal ..... Figure 7.19 ..... **7**-33
Top plates ..... Table 8.16 ..... **8**-28
Non-loadbearing
Support to ..... Figure 7.5 ..... **7**-10
Wind
Bracing ..... 5.2.7 ..... **5**-6
Bracing demand ..... 5.2 ..... **5**-3
Tables 5.5 to 5.7 ..... **5**-8 – **5**-10
Direction of ..... Figure 5.3 ..... **5**-9
Windows ..... 11.9 ..... **11**-22
Wind regions ..... Figure 5.1 ..... **5**-5
Wind zones ..... Table 5.2 ..... **5**-4
Building ..... Table 5.5 ..... **5**-8
Determination of ..... Tables 5.1 and 5.2 ..... **5**-4
Wings ..... 5.1.5 ..... **5**-3
Definition ..... 1.3 ..... **1**-20
Wire dog ..... Figure 2.2 ..... **2**-7
Definition ..... 1.3 ..... **1**-20
Wood-based products ..... 2.3 ..... **2**-3
4.3 ..... **4**-3
4.3.4 ..... **4**-6

Z

Zones
Corrosion ..... Figure 4.1 ..... **4**-4
Earthquake ..... 5.3.2 ..... **5**-6
Figure 5.4 ..... **5**-12
Lee ..... Figure 5.1 ..... **5**-5
Snow ..... Figure 15.1 ..... **15**-4
Topographic ..... Figure 5.2 ..... **5**-7
Wind ..... 5.2.1 ..... **5**-3

Copyright Standards New Zealand

© The Crown in right of New Zealand, administered by the New Zealand Standards Executive. Access to this standard has been sponsored by the Ministry of Business, Innovation, and Employment under copyright license LN001498. You are not permitted to reproduce or distribute any part of this standard without prior written permission from Standards New Zealand, on behalf of New Zealand Standards Executive, unless your actions are covered by Part 3 of the Copyright Act 1994.

© The Crown in right of New Zealand, administered by the New Zealand Standards Executive. Access to this standard has been sponsored by the Ministry of Business, Innovation, and Employment under copyright license LN001498. You are not permitted to reproduce or distribute any part of this standard without prior written permission from Standards New Zealand, on behalf of New Zealand Standards Executive, unless your actions are covered by Part 3 of the Copyright Act 1994.

Copyright Standards New Zealand

© The Crown in right of New Zealand, administered by the New Zealand Standards Executive. Access to this standard has been sponsored by the Ministry of Business, Innovation, and Employment under copyright license LN001498. You are not permitted to reproduce or distribute any part of this standard without prior written permission from Standards New Zealand, on behalf of New Zealand Standards Executive, unless your actions are covered by Part 3 of the Copyright Act 1994.

Copyright Standards New Zealand

PUBLISHING HISTORY

First published:	November 1978
Reprinted incorporating Amendments:	August 1981
Revised:	October 1984
Revised:	October 1990
Reprinted incorporating Corrigenda, Supplement and Amendment No. 1:	November 1992
Revised:	June 1999
Reprinted incorporating Amendment No. 1:	September 2001
Reprinted incorporating Amendments 1 and 2:	July 2006

© 1999 STANDARDS COUNCIL

Approved by the Standards Council on 4 May 1999 to be a New Zealand Standard pursuant to the provisions of section 10 of the Standards Act 1988.

First published: 3 June 1999

The following SNZ references relate to this standard:

Project No. P 3604
Draft for comment No. DZ 3604
Typeset by: Standards New Zealand
Printed by: The Colour Guy

STANDARDS
NEW ZEALAND
PAEREWA AOTEAROA